Eastbrook

Affordable Luxury

ISSUE 47

New Product Selections Inside



BATHROOM COLLECTION

Republic Of Ireland Edition | January 1st - July 31st 2023

New Ranges To Issue 47

NEW VANITY



NEW BATHS



NEW RADIATORS



NEW ENCLOSURES



NEW ACCESSORIES





SCAN ME

BTU Calculator

PEFC
PEFC/16-33-582
PEFC Certified
This product is from sustainably managed forests and controlled sources
www.pefc.org

ISO 9001 CERTIFIED
UKAS MANAGEMENT SYSTEMS
8289
British Assessment Bureau

We have tried to ensure that all price and product information is correct at the time of going to print. However, the specifications contained in this catalogue are for information purposes only and are subject to change. Due to our ongoing policy of product development and improvement, all prices, specifications and features are subject to change without prior notice. Errors and omissions excepted.

Beaufort

OUR NEW IMPROVED **BATH COLLECTION**

Ultra-strong, superior quality, yet affordable.

After more than 3 years of research and development, with a major investment in the latest technology, equipment and production facilities, ***Eastbrook is proud to introduce Beaufort***, our new improved collection of exceptional baths.

Named after the Beaufort wind force scale used by the Met Office for the shipping forecast, each new line is named after a sea region around the British Isles. Relating to the strong winds and fair weather conditions in these regions, the new Beaufort collection combines the lightness and warmth of acrylic with the strongest and best insulating materials available, to deliver the perfect bath.

With many of us spending more time at home than ever before, bathing and its restorative contribution to wellbeing and relaxation is ever more relevant. Now is the time to invest in a superior bathing experience with a new Ultra-Strong Beaufort bath. It will revitalise your bathroom space and provide the warmth and comfort you need for that long therapeutic soak.

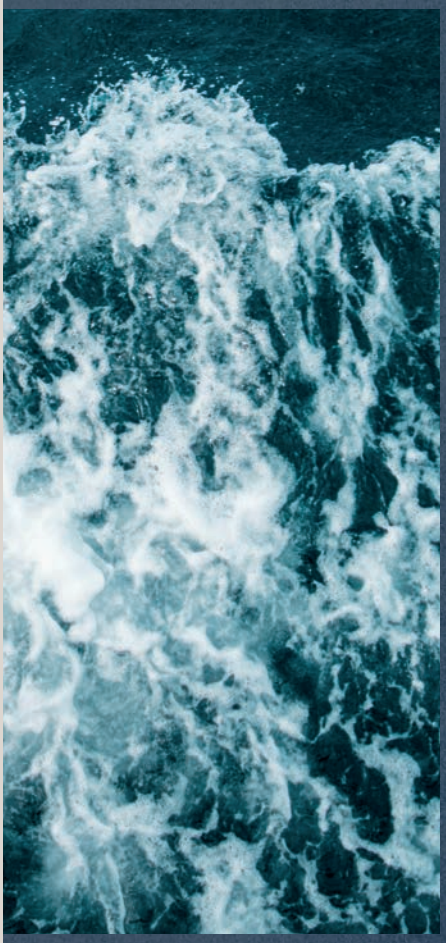

Storm Proof. 5mm.

Beaufort

Ultra Strong. Ultra Warm.

Beauforté

Eastbrook has sold over a million baths. Through working closely with showrooms, plumbers, installers, and end-users, we have developed a thorough knowledge about what people want from their bath. The Beaufort range is the culmination of our technical and market experience combined with our practical knowledge and understanding of what a bath fitter requires.

Following a comprehensive research study, we established there was a market need for a quality acrylic bath range with Ultra-Strong attributes yet positioned at an affordable price point. This resulted in a major investment with leading UK bath manufacturer Hartford Holdings Group. Together we have developed a dedicated UK production facility for the manufacture of our affordable but luxurious 5mm and Ultra-Strong Beauforté bath collection. These are available in a wide choice of bath designs and size options to suit every bathroom space.

The Beaufort bath collection continues to build on Eastbrook's hard-won reputation for exceptional products, exceptional stock, and exceptional service.

Beaufort Bath Contents

Portland SE 48 - 51
Portland DE 52 - 53
Portland SE Twin Grip 54 - 57
Portland DE Single Grip 58 - 59
Portland Low Level SE Twin Grip 60 - 61
Portland L-Shape 62 - 65
Portland P-Shape 66 - 69

Biscay DE 70 - 71
Biscay SE Straight Edge 72 - 73
Biscay DE Straight Edge 74 - 75
Biscay Showerbath 76 - 79

Rockall SE 80 - 83
Rockall SE Twin Grip 84 - 87

Malin SE 88 - 91
Malin DE 92 - 95
Malin D-Shape Back to wall 96 - 97

Shannon L-Shape 98 - 99
Shannon P-Shape 100 - 101

Lundy Off-Set Corner 102 - 103

Wandsworth Freestanding 104
Lambeth Freestanding 105
Charlton Freestanding 106
Margravine Freestanding 107
Chislehurst Freestanding 108
Wickham Freestanding 109
Humber Freestanding 110 - 111

Stocked Whirlpool Baths 114 - 119
Bespoke Whirlpool Baths 120 - 121
Accessories & Wastes 122 - 123
Bath Panels 124 - 125

A Wave Of British Quality That Lasts

MADE IN THE UK

BEST IN CLASS MANUFACTURING

Following the best British manufacturing standards and technical innovation, Beaufort baths are manufactured in the UK with skill and precision.

All Beaufort baths are manufactured from 5mm Asterite sanitaryware grade cell cast acrylic sheet. As a result of the acrylic being cast the colour is all the way through the material rather than a top surface layer. Each bath is vacuum formed on the very latest vertical vacuum forming machines that are capable of zone heating the acrylic prior to moulding to ensure not only an even form every time but an ability to control the material thickness as it is drawn into the tool.





Storm proof standards

Following the finest traditions of British craftsmanship and technical innovation, the Beaufort line is manufactured to extracting standards meeting EN198, CE EN14516:2015 CL1 PH standards. The production moulds have been created using one of the fastest and most accurate Computer Numerical Control (CNC) systems available to machine the best quality solid aluminium bath moulds that have been milled to tolerances of 10 micrometres. Regulated temperature controls and integrated vacuum chambers ensure that each bath formed is done so in regimented conditions to ensure the perfect result every time.

Precision moulding

Our precise mould calibration delivers an impossibly silky finish, arguably the best in the market.



The Difference Is Beaufort

GALE FORCE STRENGTH

The materials from which our Beauforté baths are constructed are incredibly strong and hard wearing. This market leading reinforcement process results in a product that is as strong as a steel bath and almost double the strength of a typical acrylic bath. This result gives us a more rigid bath with no movement or flexibility when you shower or bathe.

MAINTAINS WARMTH

The standard 5mm bath is made storm proof by our proprietary fibre and resin mix. The extra reinforcement in the Beauforté adds an additional layer of insulation to the underside of the bath. This means that the warm bath temperature is retained for much longer. A long relaxing soak can be enjoyed with no need to top up with hot water, less wasteful and good for the environment.

EXTRA SUPPORT

Every Beaufort bath comes with the highest specification support system available. This has been specifically designed to handle the extra weight of the Beauforté reinforced baths but is a standard feature across the whole Beaufort range. It has five adjustable legs for precision levelling and robust wall brackets to guarantee maximum rigidity. As a result, maximum rigidity is achieved with no movement from the bath and no problems with sealing.

THE CHOICE OF THE PROFESSIONAL

Eastbrook has been selling baths for over 28 years. During this time, we have spoken to skilled installers every day and we understand that the professional bathroom fitter requires quality products that are easy and quick to install with no customer call backs. The Beauforté range is backed by a full 30-year guarantee against manufacturing faults. We are confident that you will find it's excellence and longevity unsurpassed in the market today.

MANUFACTURER'S WARRANTY



We've Sent Reinforcements

Photo taken at Eastbrook's warehouse 2021



Beauforté

Our Ultra-Strong, Gale Force range.

This fantastic collection of superior quality baths includes the Ultra-Strong Gale Force range, which features the added strength and rigidity of Beauforté.

Whatever the size or shape of your bathroom space, there are a wide choice of bath designs to choose from – all of which offer exceptional value for money.

Our Strongest Bath Solution

Beauforté

HOW DOES BEAUFORTÉ WORK?

Beauforté is an intensive process that adds an Ultra-Strong layer of reinforcement to the underside of each bath. This not only greatly increases the strength of the bath but also increases its heat insulation properties. It results in a bath that is as strong as a steel bath and around **45% stronger than a typical acrylic bath**.



A Beaufort bath reinforced with Beauforté is arguably the strongest and most durable acrylic bath available on the market today. This innovative bath solution offers many other practical advantages – quality design, rigidity, longevity, all combined with an exceptionally silky, warm acrylic finish.

The special layered reinforcement process of Beauforté makes these baths suitable for areas of high-use such as hotels, guest-houses, and large family homes. When fitted with the high specification support system, maximum rigidity and a perfect fit is achieved.The standard 5mm Beaufort line is made 'storm-proof' by our proprietary fibre and resin mix. The Beauforté reinforcement on the Gale Force line adds an extra layer of insulation to the underside of the bath; this means the warm bath temperature is retained for much longer. A long, relaxing soak can be enjoyed with no need to top up with hot water, good for the environment and less wasteful.

Suitable for high use facilities

The special layered reinforcement process of Beauforté makes these baths suitable for areas of high-use such as **hotels**, **guest-houses**, and **large family homes**.



Portland SINGLE ENDED

Situated in the mild depths of the English Channel, the Portland sea region is located along the Jurassic Coast, famous for its geology and striking landforms. Named after this area, the Portland bath is a stunning, minimalist bathing solution, available in both single and double ended variants, with or without grips. Featuring a modern angular design with straight sides and a sloping back, the Portland is surprisingly deep, providing a generous, warm, and relaxing bath.

The Portland is available in a wide range of bath sizes and in a choice of thickness - 5mm acrylic or ultra-strong Beauforté, which significantly extends the life of the bath.



PRODUCT FEATURES

- 20 models
- Each available in: 5mm Acrylic & Ultra Strong Beauforté
- Supplied without pre-drilled tap holes or waste fittings
- 440mm depth on all Portland SE models
- Sloping back rest for lumbar support

1500 x 700 SE

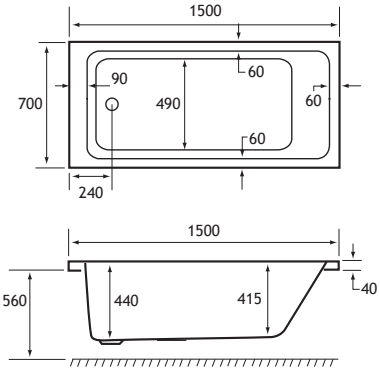

1500 x 700 x 440mm — **192 Litres**

DESCRIPTION	CODE	€ EX VAT	€ INC VAT
1500 x 700 Portland - 5mm	42.0019	398.00	489.54
1500 x 700 Portland - Beauforté	42.1019	730.00	897.90
PANELS			
1500 x 560 Front Panel	42.5017	160.00	196.80
700 x 560 End Panel	42.5024	97.00	119.31
1500 x 560 Front Panel - Beauforté	42.6017	269.00	330.87
700 x 560 End Panel - Beauforté	42.6024	160.00	196.80
1500 Adjustable Front Panel - Beauforté	42.6034	388.00	477.24
1810 x 810 L Shape Flat Panel - Beauforté	42.6035	514.00	632.22

SHOWER
HEAD REST
440 DEPTH
ULTRA STRONG

1600 x 700 SE

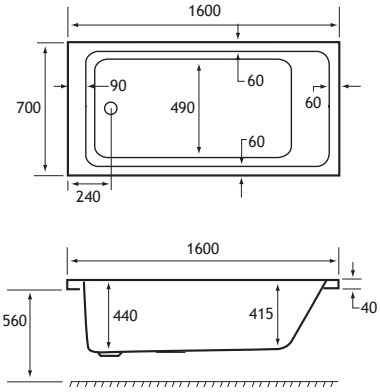

1600 x 700 x 440mm — **209 Litres**

DESCRIPTION	CODE	€ EX VAT	€ INC VAT
1600 x 700 Portland - 5mm	42.0018	398.00	489.54
1600 x 700 Portland - Beauforté	42.1018	730.00	897.90
PANELS			
1600 x 560 Front Panel	42.5016	160.00	196.80
700 x 560 End Panel	42.5024	97.00	119.31
1600 x 560 Front Panel - Beauforté	42.6016	269.00	330.87
700 x 560 End Panel - Beauforté	42.6024	160.00	196.80
1810 x 810 L Shape Flat Panel - Beauforté	42.6035	514.00	632.22

SHOWER
HEAD REST
440 DEPTH
ULTRA STRONG

Universal Fittings

ALL 5mm & Beauforté baths come complete with Universal Fittings such as legs, feet & wall brackets etc. Organised ready for your bath installer to fit with ease.



SINGLE ENDED Portland

Bath Screens
Page 137-145



Portland SE shown. Taps for illustration

Adjustable bath panels on page 124 - 125

Portland SINGLE ENDED

1600 x 800 SE

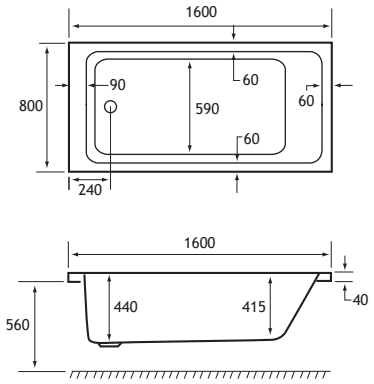

1600 x 800 x 440mm — **241 Litres**

DESCRIPTION	CODE	€ EX VAT	€ INC VAT
1600 x 800 SE Portland - 5mm	42.0017	542.00	666.66
1600 x 800 SE Portland - Beauforté	42.1017	940.00	1156.20
PANELS			
1600 x 560 SE Front Panel - 5mm	42.5016	160.00	196.80
800 x 560 SE End Panel	42.5022	97.00	119.31
1600 x 560 Front Panel - Beauforté	42.6016	269.00	330.87
800 x 560 End Panel - Beauforté	42.6022	174.00	214.02
1810 x 810 L Shape Flat Panel - Beauforté	42.6035	514.00	632.22

SHOWER
HEAD REST
440 DEPTH
ULTRA STRONG

1700 x 700 SE

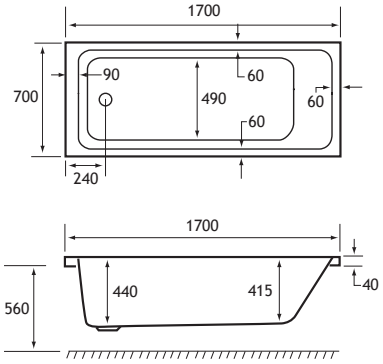

1700 x 700 x 440mm — **230 Litres**

DESCRIPTION	CODE	€ EX VAT	€ INC VAT
1700 x 700 SE Portland - 5mm	42.0016	398.00	489.54
1700 x 700 SE Portland - Beauforté	42.1016	730.00	897.90
PANELS			
1700 x 560 Front Panel	42.5013	160.00	196.80
700 x 560 End Panel	42.5024	97.00	119.31
1700 x 560 Front Panel - Beauforté	42.6013	269.00	330.87
700 x 560 End Panel - Beauforté	42.6024	160.00	196.80
1700 Adjustable Front Panel - Beauforté	42.6033	388.00	477.24
1810 x 810 L Shape Flat Panel - Beauforté	42.6035	514.00	632.22

SHOWER
HEAD REST
440 DEPTH
ULTRA STRONG

1700 x 750 SE

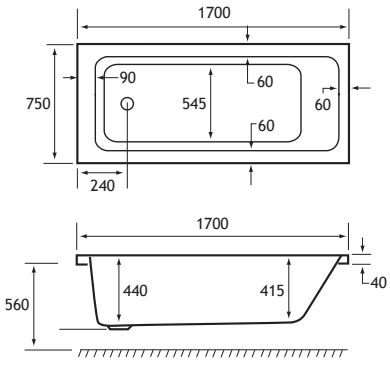

1700 x 750 x 440mm — **248 Litres**

DESCRIPTION	CODE	€ EX VAT	€ INC VAT
1700 x 750 SE Portland - 5mm	42.0015	490.00	602.70
1700 x 750 SE Portland - Beauforté	42.1015	868.00	1067.64
PANELS			
1700 x 560 Front Panel	42.5013	160.00	196.80
750x560 End Panel	42.5023	97.00	119.31
1700 x 560 Front Panel - Beauforté	42.6013	269.00	330.87
750 x 560 End Panel - Beauforté	42.6023	160.00	196.80
1700 Adjustable Front Panel - Beauforté	42.6033	388.00	477.24
1810 x 810 L Shape Flat Panel - Beauforté	42.6035	514.00	632.22

SHOWER
HEAD REST
440 DEPTH
ULTRA STRONG

1700 x 800 SE

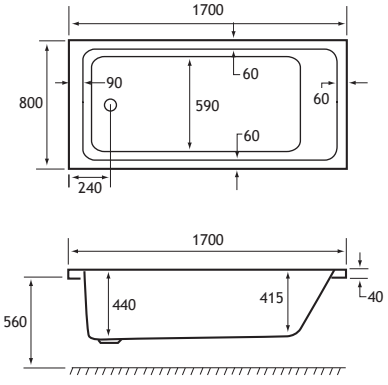

1700 x 800 x 440mm — **264 Litres**

DESCRIPTION	CODE	€ EX VAT	€ INC VAT
1700 x 800 SE Portland - 5mm	42.0014	542.00	666.66
1700 x 800 SE Portland - Beauforté	42.1014	940.00	1156.20
PANELS			
1700 x 560 Front Panel	42.5013	160.00	196.80
800x560 End Panel	42.5022	97.00	119.31
1700 x 560 Front Panel - Beauforté	42.6013	269.00	330.87
800 x 560 End Panel - Beauforté	42.6022	174.00	214.02
1700 Adjustable Front Panel - Beauforté	42.6033	388.00	477.24
1810 x 810 L Shape Flat Panel - Beauforté	42.6035	514.00	632.22

SHOWER
HEAD REST
440 DEPTH
ULTRA STRONG

SINGLE ENDED Portland

1700 x 900 SE

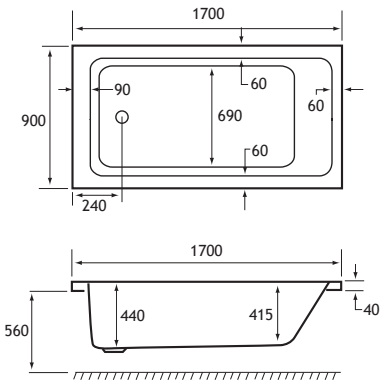

1700 x 900 x 440mm — **297 Litres**

DESCRIPTION	CODE	€ EX VAT	€ INC VAT
1700 x 900 SE Portland - 5mm	42.0013	604.00	742.92
1700 x 900 SE Portland - Beauforté	42.1013	1029.00	1265.67
PANELS			
1700 x 560 Front Panel	42.5013	160.00	196.80
900x560 End Panel	42.5021	97.00	119.31
1700 x 560 Front Panel - Beauforté	42.6013	269.00	330.87
900 x 560 End Panel - Beauforté	42.6021	192.00	236.16
1700 Adjustable Front Panel - Beauforté	42.6033	388.00	477.24

SHOWER
HEAD REST
440 DEPTH
ULTRA STRONG

NEW

1750 x 750 SE

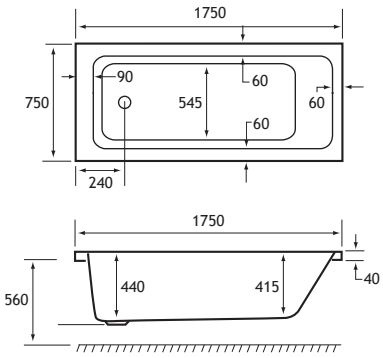

1750 x 750 x 440mm — **258 Litres**

DESCRIPTION	CODE	€ EX VAT	€ INC VAT
1750 x 750 SE Portland - 5mm	42.0020	672.00	826.56
1750 x 750 SE Portland - Beauforté	42.1020	1113.00	1368.99
PANELS			
1750 x 560 Front Panel	42.5018	180.00	221.40
750x560 End Panel	42.5023	97.00	119.31
1750 x 560 Front Panel - Beauforté	42.6018	280.00	344.40
750 x 560 End Panel - Beauforté	42.6023	160.00	196.80
1700 Adjustable Front Panel - Beauforté	42.6033	388.00	477.24
1810 x 810 L Shape Flat Panel - Beauforté	42.6035	514.00	632.22

SHOWER
HEAD REST
440 DEPTH
ULTRA STRONG

1800 x 725 SE

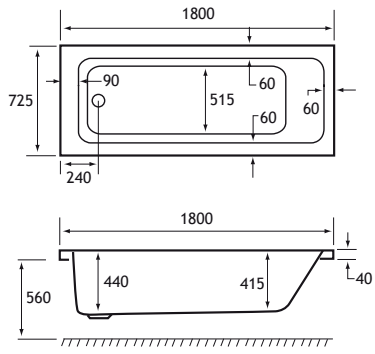

1800 x 725 x 440mm — **250 Litres**

DESCRIPTION	CODE	€ EX VAT	€ INC VAT
1800 x 725 SE Portland - 5mm	42.0012	530.00	651.90
1800 x 725 SE Portland - Beauforté	42.1012	922.00	1134.06
PANELS			
1800 x 560 Front Panel	42.5012	178.00	218.94
750x560 End Panel*	42.5023	97.00	119.31
1800 x 560 Front Panel - Beauforté	42.6012	285.00	350.55
750 x 560 End Panel - Beauforté*	42.6023	160.00	196.80
1800 Adjustable Front Panel - Beauforté	42.6032	404.00	496.92
1810 x 810 L Shape Flat Panel - Beauforté	42.6035	514.00	632.22

SHOWER
HEAD REST
440 DEPTH
ULTRA STRONG

* Panel requires cutting down

1800 x 800 SE

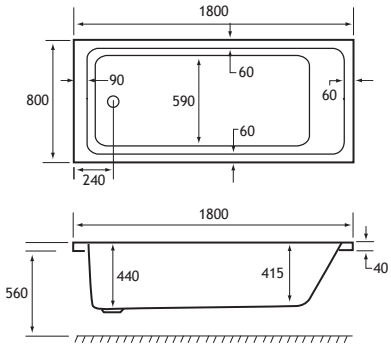

1800 x 800 x 440mm — **283 Litres**

DESCRIPTION	CODE	€ EX VAT	€ INC VAT
1800 x 800 SE Portland - 5mm	42.0011	586.00	720.78
1800 x 800 SE Portland - Beauforté	42.1011	1006.00	1237.38
PANELS			
1800 x 560 Front Panel	42.5012	178.00	218.94
800x560 End Panel	42.5022	97.00	119.31
1800 x 560 Front Panel - Beauforté	42.6012	285.00	350.55
800 x 560 End Panel - Beauforté	42.6022	174.00	214.02
1800 Adjustable Front Panel - Beauforté	42.6032	404.00	496.92
1810 x 810 L Shape Flat Panel - Beauforté	42.6035	514.00	632.22

SHOWER
HEAD REST
440 DEPTH
ULTRA STRONG

Portland DOUBLE ENDED

Situated in the mild depths of the English Channel, the Portland sea region is located along the Jurassic Coast, famous for its geology and striking landforms. Named after this area, the Portland bath is a stunning, minimalist bathing solution, available in both single and double ended variants, with or without grips. Featuring a modern angular design with straight sides and a sloping back, the Portland is surprisingly deep, providing a generous, warm, and relaxing bath.

The Portland is available in a wide range of bath sizes and in a choice of thickness - 5mm acrylic or ultra-strong Beauforté, which significantly extends the life of the bath.



PRODUCT FEATURES

- 10 models
- Each available in: 5mm Acrylic & Ultra Strong Beauforté
- Supplied without pre-drilled tap holes or waste fittings
- 440mm depth on all Portland DE models
- Sloping back rest at both ends for lumbar support



Portland DE shown with Helston bath filler 93.0011 Adjustable bath panels on page 124 - 125

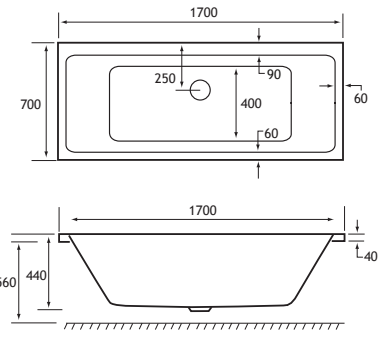

1700 x 700 DE

1700 x 700 x 440mm **210 Litres**

DESCRIPTION	CODE	€ EX VAT	€ INC VAT
1700 x 700 DE Portland - 5mm	42.0035	420.00	516.60
1700 x 700 DE Portland - Beauforté	42.1035	762.00	937.26
PANELS			
1700 x 560 Front Panel	42.5013	160.00	196.80
700 x 560 End Panel	42.5024	97.00	119.31
1700 x 560 Front Panel - Beauforté	42.6013	269.00	330.87
700 x 560 End Panel - Beauforté	42.6024	160.00	196.80
1700 Adjustable Front Panel - Beauforté	42.6033	388.00	477.24
1810 x 810 L Shape Flat Panel - Beauforté	42.6035	514.00	632.22

HEAD REST

440 DEPTH

ULTRA STRONG

DOUBLE ENDED Portland

1700 x 750 DE

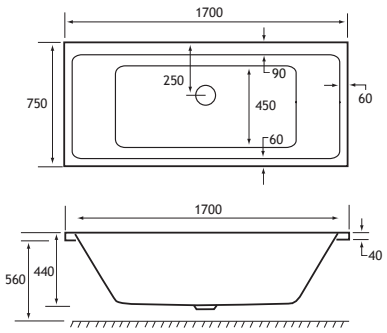

1700 x 750 x 440mm — **231 Litres**

DESCRIPTION	CODE	€ EX VAT	€ INC VAT
1700 x 750 DE Portland - 5mm	42.0034	514.00	632.22
1700 x 750 DE Portland - Beauforté	42.1034	899.00	1105.77
PANELS			
1700 x 560 Front Panel	42.5013	160.00	196.80
750x560 End Panel	42.5023	97.00	119.31
1700 x 560 Front Panel - Beauforté	42.6013	269.00	330.87
750 x 560 End Panel - Beauforté	42.6023	160.00	196.80
1700 Adjustable Front Panel - Beauforté	42.6033	388.00	477.24
1810 x 810 L Shape Flat Panel - Beauforté	42.6035	514.00	632.22

HEAD REST
440 DEPTH
ULTRA STRONG

1700 x 800 DE

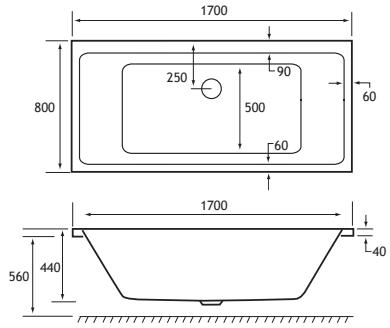

1700 x 800 x 440mm — **228 Litres**

DESCRIPTION	CODE	€ EX VAT	€ INC VAT
1700 x 800 DE Portland - 5mm	42.0033	565.00	694.95
1700 x 800 DE Portland - Beauforté	42.1033	973.00	1196.79
PANELS			
1700 x 560 Front Panel	42.5013	160.00	196.80
800x560 End Panel	42.5022	97.00	119.31
1700 x 560 Front Panel - Beauforté	42.6013	269.00	330.87
800 x 560 End Panel - Beauforté	42.6022	174.00	214.02
1700 Adjustable Front Panel - Beauforté	42.6033	388.00	477.24
1810 x 810 L Shape Flat Panel - Beauforté	42.6035	514.00	632.22

HEAD REST
440 DEPTH
ULTRA STRONG

1800 x 800 DE

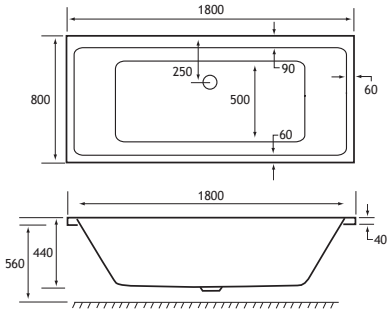

1800 x 800 x 440mm — **260 Litres**

DESCRIPTION	CODE	€ EX VAT	€ INC VAT
1800 x 800 DE Portland - 5mm	42.0032	608.00	747.84
1800 x 800 DE Portland - Beauforté	42.1032	1035.00	1273.05
PANELS			
1800 x 560 Front Panel	42.5012	178.00	218.94
800x560 End Panel	42.5022	97.00	119.31
1800 x 560 Front Panel - Beauforté	42.6012	285.00	350.55
800 x 560 End Panel - Beauforté	42.6022	174.00	214.02
1800 Adjustable Front Panel - Beauforté	42.6032	404.00	496.92
1810 x 810 L Shape Flat Panel - Beauforté	42.6035	514.00	632.22

HEAD REST
440 DEPTH
ULTRA STRONG

1900 x 900 DE

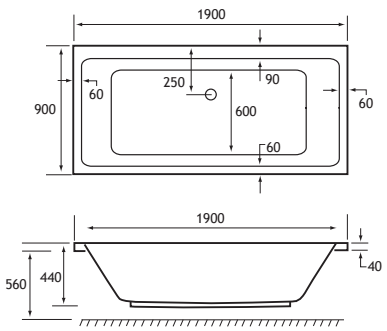

1900 x 900 x 440mm — **306 Litres**

DESCRIPTION	CODE	€ EX VAT	€ INC VAT
1900 x 900 DE Portland - 5mm	42.0031	824.00	1013.52
1900 x 900 DE Portland - Beauforté	42.1031	1349.00	1659.27
PANELS			
1900 x 560 Front Panel	42.5011	229.00	281.67
900x560 End Panel	42.5021	97.00	119.31
1900 x 560 Front Panel - Beauforté	42.6011	335.00	412.05
900 x 560 End Panel - Beauforté	42.6021	192.00	236.16

HEAD REST
440 DEPTH
ULTRA STRONG

Portland SINGLE ENDED, TWIN GRIP

Situated in the mild depths of the English Channel, the Portland sea region is located along the Jurassic Coast, famous for its geology and striking landforms. Named after this area, the Portland bath is a stunning, minimalist bathing solution, available in both single and double ended variants, with or without grips. Featuring a modern angular design with straight sides and a sloping back, the Portland is surprisingly deep, providing a generous, warm, and relaxing bath.

The Portland is available in a wide range of bath sizes and in a choice of thickness - 5mm acrylic or ultra-strong Beauforté, which significantly extends the life of the bath.



PRODUCT FEATURES

- 16 models
- Each available in: 5mm Acrylic & Ultra Strong Beauforté
- Supplied without pre-drilled tap holes or waste fittings
- 440mm depth on all Portland SE models
- Twin grips available in 6 colours (Sold separately)



Portland SE TG shown. Grips sold separately. Adjustable bath panels on page 124 - 125

SINGLE ENDED, TWIN GRIP Portland

1500 x 700 SE TG

Grips Sold Separately - Page 57

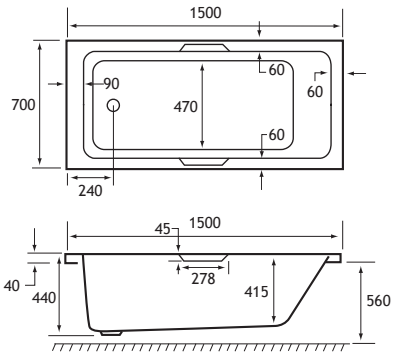

1500 x 700 x 440mm — **200 Litres**

DESCRIPTION	CODE	€ EX VAT	€ INC VAT
1500 x 700 TG Portland - 5mm	42.0028	405.00	498.15
1500 x 700 TG Portland - Beauforté	42.1028	740.00	910.20
PANELS			
1500 x 560 Front Panel	42.5017	160.00	196.80
700 x 560 End Panel	42.5024	97.00	119.31
1500 x 560 Front Panel - Beauforté	42.6017	269.00	330.87
700 x 560 End Panel - Beauforté	42.6024	160.00	196.80
1500 Adjustable Front Panel - Beauforté	42.6034	388.00	477.24
1810 x 810 L Shape Flat Panel - Beauforté	42.6035	514.00	632.22

SHOWER
GRIPS
440 DEPTH
HEAD REST
ULTRA STRONG

1600 x 700 SE TG

Grips Sold Separately - Page 57

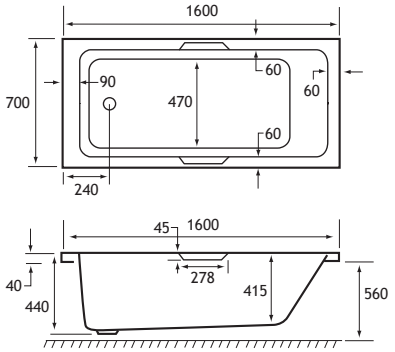

1600 x 700 x 440mm — **209 Litres**

DESCRIPTION	CODE	€ EX VAT	€ INC VAT
1600 x 700 TG Portland - 5mm	42.0027	405.00	498.15
1600 x 700 TG Portland - Beauforté	42.1027	740.00	910.20
PANELS			
1600 x 560 Front Panel	42.5016	160.00	196.80
700 x 560 End Panel	42.5024	97.00	119.31
1600 x 560 Front Panel - Beauforté	42.6016	269.00	330.87
700 x 560 End Panel - Beauforté	42.6024	160.00	196.80
1810 x 810 L Shape Flat Panel - Beauforté	42.6035	514.00	632.22

SHOWER
GRIPS
440 DEPTH
HEAD REST
ULTRA STRONG

1650 x 700 SE TG

Grips Sold Separately - Page 57

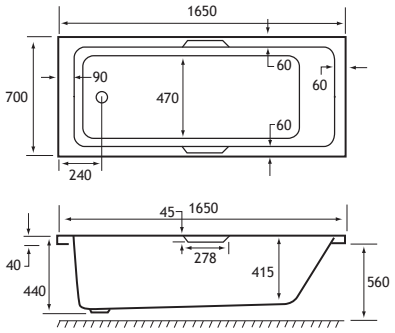

1650 x 700 x 440mm — **224 Litres**

DESCRIPTION	CODE	€ EX VAT	€ INC VAT
1650 x 700 TG Portland - 5mm	42.0026	405.00	498.15
1650 x 700 TG Portland - Beauforté	42.1026	740.00	910.20
PANELS			
1650 x 560 Front Panel	42.5015	160.00	196.80
700 x 560 End Panel	42.5024	97.00	119.31
1650 x 560 Front Panel - Beauforté	42.6015	269.00	330.87
700 x 560 End Panel - Beauforté	42.6024	160.00	196.80
1810 x 810 L Shape Flat Panel - Beauforté	42.6035	514.00	632.22

SHOWER
GRIPS
440 DEPTH
HEAD REST
ULTRA STRONG

1700 x 700 SE TG

Grips Sold Separately - Page 57

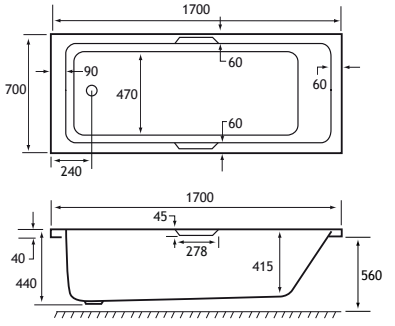

1700 x 700 x 440mm — **230 Litres**

DESCRIPTION	CODE	€ EX VAT	€ INC VAT
1700 x 700 TG Portland - 5mm	42.0025	405.00	498.15
1700 x 700 TG Portland - Beauforté	42.1025	740.00	910.20
PANELS			
1700 x 560 Front Panel	42.5013	160.00	196.80
700 x 560 End Panel	42.5024	97.00	119.31
1700 x 560 Front Panel - Beauforté	42.6013	269.00	330.87
700 x 560 End Panel - Beauforté	42.6024	160.00	196.80
1700 Adjustable Front Panel - Beauforté	42.6033	388.00	477.24
1810 x 810 L Shape Flat Panel - Beauforté	42.6035	514.00	632.22

SHOWER
GRIPS
440 DEPTH
HEAD REST
ULTRA STRONG

Portland SINGLE ENDED, TWIN GRIP

1700 x 750 SE TG Grips Sold Separately

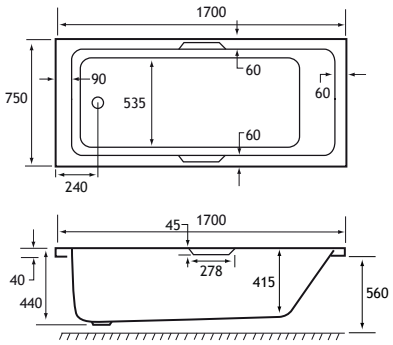

1700 x 750 x 440mm — **248 Litres**

DESCRIPTION	CODE	€ EX VAT	€ INC VAT
1700 x 750 TG Portland - 5mm	42.0024	516.00	634.68
1700 x 750 TG Portland - Beauforté	42.1024	903.00	1110.69
PANELS			
1700 x 560 Front Panel	42.5013	160.00	196.80
750x560 End Panel	42.5023	97.00	119.31
1700 x 560 Front Panel - Beauforté	42.6013	269.00	330.87
750 x 560 End Panel - Beauforté	42.6023	160.00	196.80
1700 Adjustable Front Panel - Beauforté	42.6033	388.00	477.24
1810 x 810 L Shape Flat Panel - Beauforté	42.6035	514.00	632.22

SHOWER
GRIPS
440 DEPTH
HEAD REST
ULTRA STRONG

1700 x 800 SE TG Grips Sold Separately

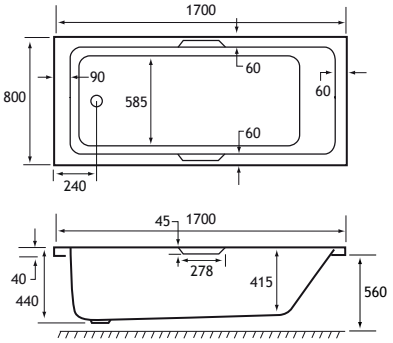

1700 x 800 x 440mm — **264 Litres**

DESCRIPTION	CODE	€ EX VAT	€ INC VAT
1700 x 800 TG Portland - 5mm	42.0022	566.00	696.18
1700 x 800 TG Portland - Beauforté	42.1022	976.00	1200.48
PANELS			
1700 x 560 Front Panel	42.5013	160.00	196.80
800x560 End Panel	42.5022	97.00	119.31
1700 x 560 Front Panel - Beauforté	42.6013	269.00	330.87
800 x 560 End Panel - Beauforté	42.6022	174.00	214.02
1700 Adjustable Front Panel - Beauforté	42.6033	388.00	477.24
1810 x 810 L Shape Flat Panel - Beauforté	42.6035	514.00	632.22

SHOWER
GRIPS
440 DEPTH
HEAD REST
ULTRA STRONG

NEW

1750 x 750 SE TG Grips Sold Separately

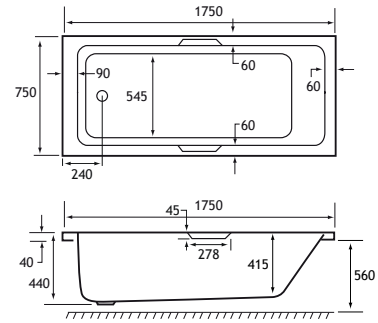

1750 x 750 x 440mm — **258 Litres**

DESCRIPTION	CODE	€ EX VAT	€ INC VAT
1750 x 750 TG Portland - 5mm	42.0023	682.00	838.86
1750 x 750 TG Portland - Beauforté	42.1023	1073.00	1319.79
PANELS			
1750 x 560 Front Panel	42.5018	180.00	221.40
750x560 End Panel	42.5023	97.00	119.31
1750 x 560 Front Panel - Beauforté	42.6018	280.00	344.40
750 x 560 End Panel - Beauforté	42.6023	160.00	196.80
1700 Adjustable Front Panel - Beauforté	42.6033	388.00	477.24
1810 x 810 L Shape Flat Panel - Beauforté	42.6035	514.00	632.22

SHOWER
GRIPS
440 DEPTH
HEAD REST
ULTRA STRONG

Universal Fittings

ALL 5mm & Beauforté baths come complete with Universal Fittings such as legs, feet & wall brackets etc. Organised ready for your bath installer to fit with ease.





SINGLE ENDED, TWIN GRIP Portland

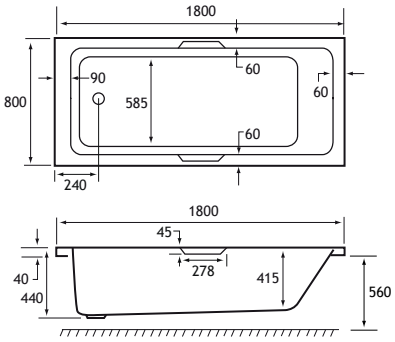

1800 x 800 SE TG Grips Sold Separately

1800 x 800 x 440mm **283 Litres**

DESCRIPTION	CODE	€ EX VAT	€ INC VAT
1800 x 800 TG Portland - 5mm	42.0021	609.00	749.07
1800 x 800 TG Portland - Beauforté	42.1021	1039.00	1277.97
PANELS			
1800 x 560 Front Panel	42.5012	178.00	218.94
800x560 End Panel	42.5022	97.00	119.31
1800 x 560 Front Panel - Beauforté	42.6012	285.00	350.55
800 x 560 End Panel - Beauforté	42.6022	174.00	214.02
1800 Adjustable Front Panel - Beauforté	42.6032	404.00	496.92
1810 x 810 L Shape Flat Panel - Beauforté	42.6035	514.00	632.22

SHOWER
GRIPS
440 DEPTH
HEAD REST
ULTRA STRONG



Portland SE TG shown. **Grips sold separately**. Compatible bath screens on page 137 - 145 Adjustable bath panels on page 124 - 125

Twin Grips (Pair)

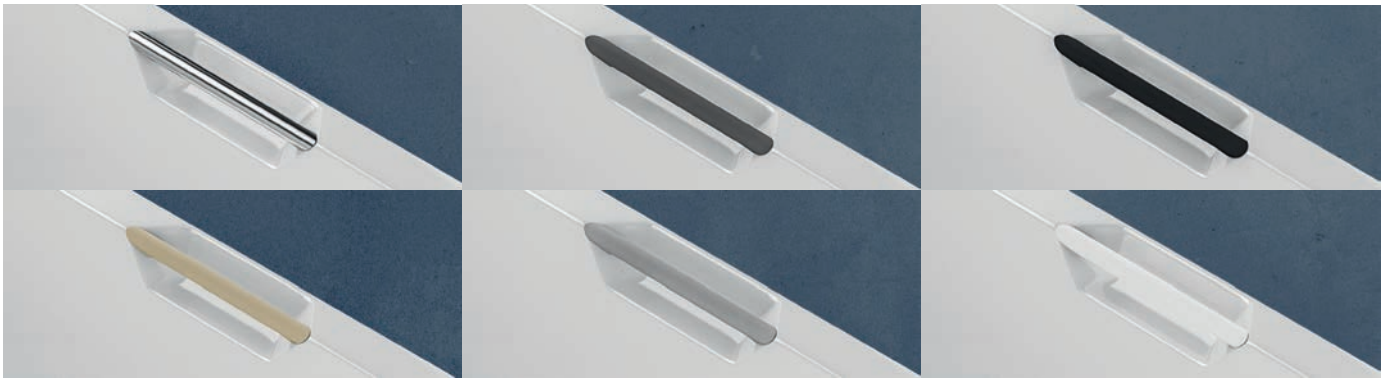

DESCRIPTION	CODE	€ EX VAT	€ INC VAT
Chrome Grips (pair)	42.0001	55.00	67.65
Matt White Grips (pair)	42.0002	72.00	88.56
Matt Grey Grips (pair)	42.0003	72.00	88.56

DESCRIPTION	CODE	€ EX VAT	€ INC VAT
Matt Black Grips (pair)	42.0004	72.00	88.56
Matt Cappuccino Grips (pair)	42.0005	72.00	88.56
Matt Anthracite Grips (pair)	42.0006	72.00	88.56

Portland DOUBLE ENDED, SINGLE GRIP

Situated in the mild depths of the English Channel, the Portland sea region is located along the Jurassic Coast, famous for its geology and striking landforms. Named after this area, the Portland bath is a stunning, minimalist bathing solution, available in both single and double ended variants, with or without grips. Featuring a modern angular design with straight sides and a sloping back, the Portland is surprisingly deep, providing a generous, warm, and relaxing bath.

The Portland is available in a wide range of bath sizes and in a choice of thickness - 5mm acrylic or ultra-strong Beauforté, which significantly extends the life of the bath.



PRODUCT FEATURES

- 6 models
- Each available in: 5mm Acrylic & Ultra Strong Beauforté
- Supplied without pre-drilled tap holes or waste fittings
- 440mm depth on all Portland SE models
- Single grips available in 6 colours (Sold separately)



Portland SE TG shown. Grips sold separately. Adjustable bath panels on page 124 - 125

DOUBLE ENDED, SINGLE GRIP Portland

1700 x 700 DE SG Grip Sold Separately

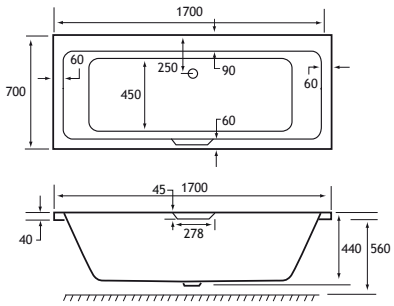

1700 x 700 x 440mm — **210 Litres**

DESCRIPTION	CODE	€ EX VAT	€ INC VAT
1700 x 700 DE SG Portland - 5mm	42.0043	420.00	516.60
1700 x 700 DE SG Portland - Beauforté	42.1043	762.00	937.26
PANELS			
1700 x 560 Front Panel	42.5013	160.00	196.80
700 x 560 End Panel	42.5024	97.00	119.31
1700 x 560 Front Panel - Beauforté	42.6013	269.00	330.87
700 x 560 End Panel - Beauforté	42.6024	160.00	196.80
1700 Adjustable Front Panel - Beauforté	42.6033	388.00	477.24
1810 x 810 L Shape Flat Panel - Beauforté	42.6035	514.00	632.22

GRIPS
440 DEPTH
HEAD REST
ULTRA STRONG

1700 x 750 DE SG Grip Sold Separately

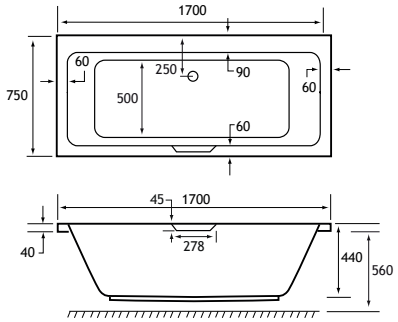

1700 x 750 x 440mm — **231 Litres**

DESCRIPTION	CODE	€ EX VAT	€ INC VAT
1700 x 750 DE SG Portland - 5mm	42.0042	516.00	634.68
1700 x 750 DE SG Portland - Beauforté	42.1042	899.00	1105.77
PANELS			
1700 x 560 Front Panel	42.5013	160.00	196.80
750x560 End Panel	42.5023	97.00	119.31
1700 x 560 Front Panel - Beauforté	42.6013	269.00	330.87
750 x 560 End Panel - Beauforté	42.6023	160.00	196.80
1700 Adjustable Front Panel - Beauforté	42.6033	388.00	477.24
1810 x 810 L Shape Flat Panel - Beauforté	42.6035	514.00	632.22

GRIPS
440 DEPTH
HEAD REST
ULTRA STRONG

1800 x 800 DE SG Grip Sold Separately

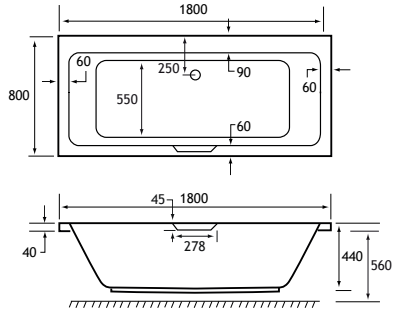

1800 x 800 x 440mm — **260 Litres**

DESCRIPTION	CODE	€ EX VAT	€ INC VAT
1800 x 800 DE SG Portland - 5mm	42.0041	608.00	747.84
1800 x 800 DE SG Portland - Beauforté	42.1041	1035.00	1273.05
PANELS			
1800 x 560 Front Panel	42.5012	178.00	218.94
800x560 End Panel	42.5022	97.00	119.31
1800 x 560 Front Panel - Beauforté	42.6012	285.00	350.55
800 x 560 End Panel - Beauforté	42.6022	174.00	214.02
1800 Adjustable Front Panel - Beauforté	42.6032	404.00	496.92
1810 x 810 L Shape Flat Panel - Beauforté	42.6035	514.00	632.22

GRIPS
440 DEPTH
HEAD REST
ULTRA STRONG

Single Grips

DESCRIPTION	CODE	€ EX VAT	€ INC VAT
Chrome Grip (Single)	42.1001	28.00	34.44
Matt White Grip (Single)	42.1002	38.00	46.74
Matt Grey Grip (Single)	42.1003	38.00	46.74
Matt Black Grip (Single)	42.1004	38.00	46.74
Matt Cappuccino Grip (Single)	42.1005	38.00	46.74
Matt Anthracite Grip (Single)	42.1006	38.00	46.74

See page 122 - 123 for all Single Grip images & bath accessories.
All grips sold separately.



Portland SINGLE ENDED, TWIN GRIP - LOW LEVEL

Situated in the mild depths of the English Channel, the Portland sea region is located along the Jurassic Coast, famous for its geology and striking landforms. Named after this area, the Portland bath is a stunning, minimalist bathing solution, available in both single and double ended variants, with or without grips. Featuring a modern angular design with straight sides and a sloping back. The Portland Low Level is an easy-access, water saving and relaxing bath.

The Portland is available in a wide range of bath sizes and in a choice of thickness - 5mm acrylic or ultra-strong Beauforté, which significantly extends the life of the bath.



PRODUCT FEATURES

- 2 models
- Available in: 5mm Acrylic & Ultra Strong Beauforté
- Supplied without pre-drilled tap holes or waste fittings
- 350mm depth on all Portland Low Level baths
- Twin grips available in 6 colours (Sold separately)

Bath Screens
Page 137-145



Portland SE TG shown with Helston bath filler 93.0011

LOW LEVEL - TWIN GRIP, SINGLE ENDED Portland

1700 x 700 LL TG Grips Sold Separately

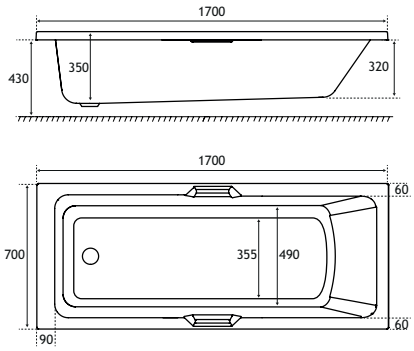

1700 x 700 x 350mm **170 Litres**

DESCRIPTION	CODE	€ EX VAT	€ INC VAT
1700 x 700 LL TG Portland - 5mm	42.0191	437.00	537.51
1700 x 700 LL TG Portland - Beauforté	42.1191	783.00	963.09
PANELS			
1700 x 430 Front Panel	42.5051	164.00	201.72
700 x 430 End Panel	42.5052	100.00	123.00
1700 x 430 Front Panel - Beauforté	42.6051	278.00	341.94
700 x 430 End Panel - Beauforté	42.6052	164.00	201.72

SHOWER
GRIPS
350 DEPTH
HEAD REST
ULTRA STRONG



Twin Grips (Pair)

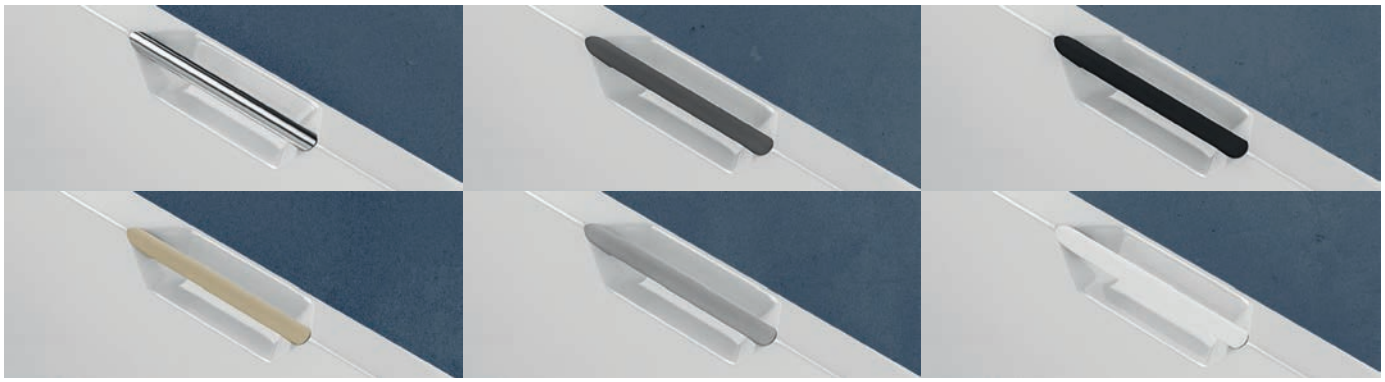

DESCRIPTION	CODE	€ EX VAT	€ INC VAT
Chrome Grips (pair)	42.0001	55.00	67.65
Matt White Grips (pair)	42.0002	72.00	88.56
Matt Grey Grips (pair)	42.0003	72.00	88.56

DESCRIPTION	CODE	€ EX VAT	€ INC VAT
Matt Black Grips (pair)	42.0004	72.00	88.56
Matt Cappuccino Grips (pair)	42.0005	72.00	88.56
Matt Anthracite Grips (pair)	42.0006	72.00	88.56

Portland L-SHAPE

Situated in the mild depths of the English Channel, the Portland sea region is located along the Jurassic Coast, famous for its geology and striking landforms. Named after this area, the Portland bath is a stunning, minimalist bathing solution. Featuring a modern angular design with straight sides and a sloping back, the Portland is surprisingly deep, providing a generous, warm, and relaxing bath.

The Portland L-Shape is available in a wide range of bath sizes and in a choice of thickness - 5mm acrylic or ultra-strong Beauforté, which significantly extends the life of the bath.



PRODUCT FEATURES

- 8 models
- Each available in: 5mm Acrylic & Ultra Strong Beauforté
- Supplied without pre-drilled tap holes or waste fittings
- 440mm depth on all Portland SE models
- Wider space at one end for showering

Bath Screens
Page 137-145



Portland L-Shape RH shown with Helston bath filler 93.0011

L-SHAPE Portland

1500 x 850 LH

NEW BEAUFORTÉ PANELS

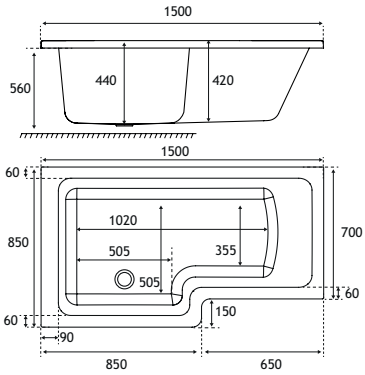

1500 x 850 x 700 x 440mm — **224 Litres**

DESCRIPTION	CODE	€ EX VAT	€ INC VAT
1500 x 850 LH Portland - 5mm	42.0183	665.00	817.95
1500 x 850 LH Portland - Beauforté	42.1183	1099.00	1351.77
PANELS			
1500 x 560 L-Shape Front Panel	42.5062	174.00	214.02
1500 x 560 L-Shape Front Panel - Beauforté	42.6062	490.00	602.70
L-Shape Universal End Panel	42.5063	98.00	120.54
L-Shape Universal End Panel - Beauforté	42.6063	173.00	212.79
BATH SCREENS			
Beaufort Screen 1400mm	58.4000	469.00	576.87
Beaufort Screen 1400mm with Towel Rail	69.0141	630.00	774.90

SHOWER
440 DEPTH
HEAD REST
ULTRA STRONG

1500 x 850 RH

NEW BEAUFORTÉ PANELS

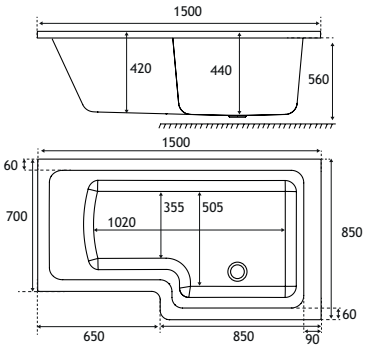

1500 x 850 x 700 x 440mm — **224 Litres**

DESCRIPTION	CODE	€ EX VAT	€ INC VAT
1500 x 850 RH Portland - 5mm	42.0184	665.00	817.95
1500 x 850 RH Portland - Beauforté	42.1184	1099.00	1351.77
PANELS			
1500 x 560 L-Shape Front Panel	42.5062	174.00	214.02
1500 x 560 L-Shape Front Panel - Beauforté	42.6062	490.00	602.70
L-Shape Universal End Panel	42.5063	98.00	120.54
L-Shape Universal End Panel - Beauforté	42.6063	173.00	212.79
BATH SCREENS			
Beaufort Screen 1400mm	58.4000	469.00	576.87
Beaufort Screen 1400mm with Towel Rail	69.0141	630.00	774.90

SHOWER
440 DEPTH
HEAD REST
ULTRA STRONG

NEW

1600 x 850 LH

NEW BEAUFORTÉ PANELS

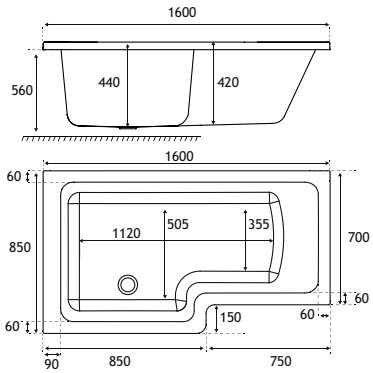

1600 x 850 x 700 x 440mm — **249 Litres**

DESCRIPTION	CODE	€ EX VAT	€ INC VAT
1600 x 850 LH Portland - 5mm	42.0231	665.00	817.95
1600 x 850 LH Portland - Beauforté	42.1231	1099.00	1351.77
PANELS			
1600 x 560 L-Shape Front Panel	42.5067	170.00	209.10
1600 x 560 L-Shape Front Panel - Beauforté	42.6067	490.00	602.70
L-Shape Universal End Panel	42.5063	98.00	120.54
L-Shape Universal End Panel - Beauforté	42.6063	173.00	212.79
BATH SCREENS			
Beaufort Screen 1400mm	58.4000	469.00	576.87
Beaufort Screen 1400mm with Towel Rail	69.0141	630.00	774.90

SHOWER
440 DEPTH
HEAD REST
ULTRA STRONG



MP - 0.5 bar minimum

Complete The Look

Helston Bath Filler

Description	Code	€ Ex VAT	€ Inc VAT
Helston Bath Filler Gloss White	93.0014	278.00	**341.94**
Helston Bath Filler Chrome	93.0011	247.00	**303.81**
Helston Bath Filler Matt Smooth Black	93.0020	278.00	**341.94**

Portland L-SHAPE

NEW

1600 x 850 RH

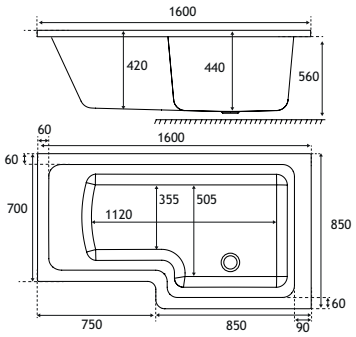

1600 x 850 x 700 x 440mm — **249 Litres**

DESCRIPTION	CODE	€ EX VAT	€ INC VAT
1600 x 850 RH Portland - 5mm	42.0232	665.00	817.95
1600 x 850 RH Portland - Beauforté	42.1232	1099.00	1351.77
PANELS			
1600 x 560 L-Shape Front Panel	42.5067	170.00	209.10
1600 x 560 L-Shape Front Panel - Beauforté	42.6067	490.00	602.70
L-Shape Universal End Panel	42.5063	98.00	120.54
L-Shape Universal End Panel - Beauforté	42.6063	173.00	212.79
BATH SCREENS			
Beaufort Screen 1400mm	58.4000	469.00	576.87
Beaufort Screen 1400mm with Towel Rail	69.0141	630.00	774.90

SHOWER
440 DEPTH
HEAD REST
ULTRA STRONG

1700 x 850 LH

NEW BEAUFORTÉ PANELS

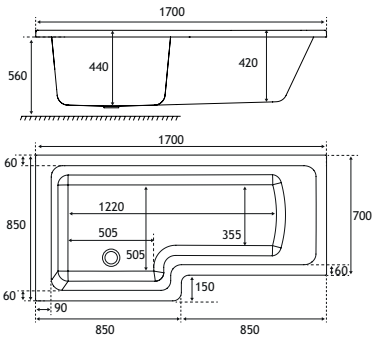

1700 x 850 x 700 x 440mm — **274 Litres**

DESCRIPTION	CODE	€ EX VAT	€ INC VAT
1700 x 850 LH Portland - 5mm	42.0181	665.00	817.95
1700 x 850 LH Portland - Beauforté	42.1181	1099.00	1351.77
PANELS			
1700 x 560 L-Shape Front Panel	42.5061	174.00	214.02
1700 x 560 L-Shape Front Panel - Beauforté	42.6061	490.00	602.70
L-Shape Universal End Panel	42.5063	98.00	120.54
L-Shape Universal End Panel - Beauforté	42.6063	173.00	212.79
BATH SCREENS			
Beaufort Screen 1400mm	58.4000	469.00	576.87
Beaufort Screen 1400mm with Towel Rail	69.0141	630.00	774.90

SHOWER
440 DEPTH
HEAD REST
ULTRA STRONG

1700 x 850 RH

NEW BEAUFORTÉ PANELS

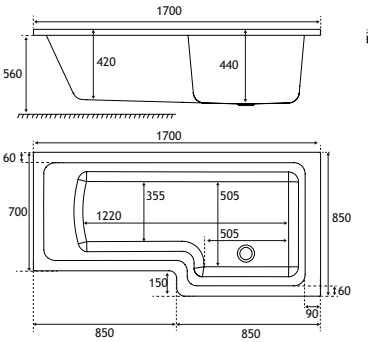

1700 x 850 x 700 x 440mm — **274 Litres**

DESCRIPTION	CODE	€ EX VAT	€ INC VAT
1700 x 850 RH Portland - 5mm	42.0182	665.00	817.95
1700 x 850 RH Portland - Beauforté	42.1182	1099.00	1351.77
PANELS			
1700 x 560 L-Shape Front Panel	42.5061	174.00	214.02
1700 x 560 L-Shape Front Panel - Beauforté	42.6061	490.00	602.70
L-Shape Universal End Panel	42.5063	98.00	120.54
L-Shape Universal End Panel - Beauforté	42.6063	173.00	212.79
BATH SCREENS			
Beaufort Screen 1400mm	58.4000	469.00	576.87
Beaufort Screen 1400mm with Towel Rail	69.0141	630.00	774.90

SHOWER
440 DEPTH
HEAD REST
ULTRA STRONG

Universal Fittings

ALL 5mm & Beauforté baths come complete with Universal Fittings such as legs, feet & wall brackets etc. Organised ready for your bath installer to fit with ease.

Portland L-SHAPE

Complete The Look

Description	Colour	Code	€ Ex VAT	€ Inc VAT
Helston Bath Filler	Chrome	93.0011	247.00	**303.81**
Modern Round Thermostatic Shower Pole	Chrome	60.1001	314.00	**386.22**
Volente 6mm Hinge Bath Screen	Chrome	58.702	303.00	**372.69**



Portland L-Shape LH shown

Portland P-SHAPE

Situated in the mild depths of the English Channel, the Portland sea region is located along the Jurassic Coast, famous for its geology and striking landforms. Named after this area, the Portland bath is a stunning, minimalist bathing solution. Featuring a modern angular design with straight sides and a sloping back, the Portland is surprisingly deep, providing a generous, warm, and relaxing bath.

The Portland P-Shape is available in a wide range of bath sizes and in a choice of thickness - 5mm acrylic or ultra-strong Beauforté, which significantly extends the life of the bath.



PRODUCT FEATURES

- 8 models
- Each available in: 5mm Acrylic & Ultra Strong Beauforté
- Supplied without pre-drilled tap holes or waste fittings
- 440mm depth on all Portland SE models
- Wider curved space at one end for showering

Bath Screens
Page 137-145



Portland P-Shape LH shown with Helston bath filler 93.0011

P-SHAPE Portland

1500 x 850 LH

NEW BEAUFORTÉ PANELS

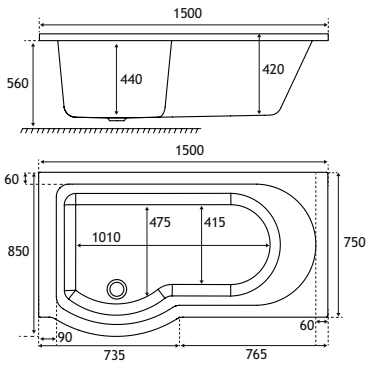

1500 x 850 x 750 x 440mm — **196 Litres**

DESCRIPTION	CODE	€ EX VAT	€ INC VAT
1500 x 850 LH Portland - 5mm	42.0187	665.00	817.95
1500 x 850 LH Portland - Beauforté	42.1187	1099.00	1351.77
PANELS			
1500 x 560 P-Shape Front Panel	42.5065	174.00	214.02
1500 x 560 P-Shape Front Panel - Beauforté	42.6065	481.00	591.63
P-Shape Universal End Panel	42.5066	98.00	120.54
P-Shape Universal End Panel - Beauforté	42.6066	173.00	212.79
BATH SCREENS			
C Shape Screen 6mm easy clean	69.0140	321.00	394.83
C Shape Screen 6mm with towel rail	69.0143	579.00	712.17

SHOWER
440 DEPTH
HEAD REST
ULTRA STRONG

1500 x 850 RH

NEW BEAUFORTÉ PANELS

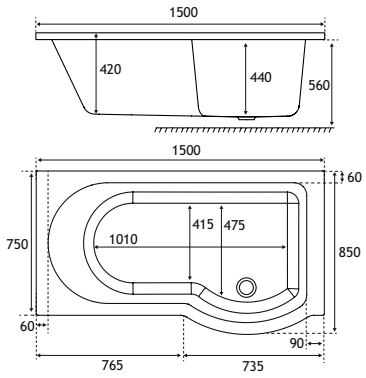

1500 x 850 x 750 x 440mm — **196 Litres**

DESCRIPTION	CODE	€ EX VAT	€ INC VAT
1500 x 850 RH Portland - 5mm	42.0188	665.00	817.95
1500 x 850 RH Portland - Beauforté	42.1188	1099.00	1351.77
PANELS			
1500 x 560 P-Shape Front Panel	42.5065	174.00	214.02
1500 x 560 P-Shape Front Panel - Beauforté	42.6065	481.00	591.63
P-Shape Universal End Panel	42.5066	98.00	120.54
P-Shape Universal End Panel - Beauforté	42.6066	173.00	212.79
BATH SCREENS			
C Shape Screen 6mm easy clean	69.0140	321.00	394.83
C Shape Screen 6mm with towel rail	69.0143	579.00	712.17

SHOWER
440 DEPTH
HEAD REST
ULTRA STRONG

NEW

1600 x 850 LH

NEW BEAUFORTÉ PANELS

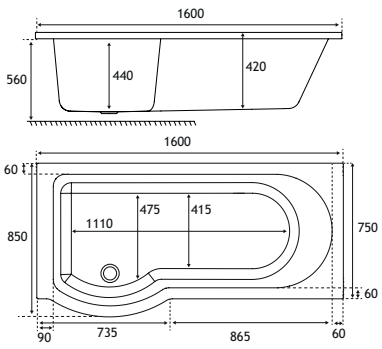

1600 x 850 x 750 x 440mm — **239 Litres**

DESCRIPTION	CODE	€ EX VAT	€ INC VAT
1600 x 850 LH Portland - 5mm	42.0233	665.00	817.95
1600 x 850 LH Portland - Beauforté	42.1233	1099.00	1351.77
PANELS			
1600 x 560 P-Shape Front Panel	42.5068	170.00	209.10
1600 x 560 P-Shape Front Panel - Beauforté	42.6068	481.00	591.63
P-Shape Universal End Panel	42.5066	98.00	120.54
P-Shape Universal End Panel - Beauforté	42.6066	173.00	212.79
BATH SCREENS			
C Shape Screen 6mm easy clean	69.0140	321.00	394.83
C Shape Screen 6mm with towel rail	69.0143	579.00	712.17

SHOWER
440 DEPTH
HEAD REST
ULTRA STRONG



MP - 0.5 bar minimum

Complete The Look

Helston Bath Filler

Description	Code	€ Ex VAT	€ Inc VAT
Helston Bath Filler Gloss White	93.0014	278.00	**341.94**
Helston Bath Filler Chrome	93.0011	247.00	**303.81**
Helston Bath Filler Matt Smooth Black	93.0020	278.00	**341.94**

Portland P-SHAPE

NEW

1600 x 850 RH

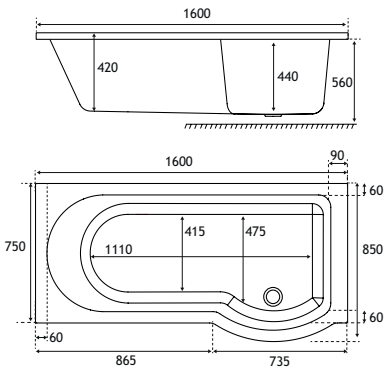

1600 x 850 x 750 x 440mm — **239 Litres**

DESCRIPTION	CODE	€ EX VAT	€ INC VAT
1600 x 850 RH Portland - 5mm	42.0234	665.00	817.95
1600 x 850 RH Portland - Beauforté	42.1234	1099.00	1351.77
PANELS			
1600 x 560 P-Shape Front Panel	42.5068	170.00	209.10
1600 x 560 P-Shape Front Panel - Beauforté	42.6068	481.00	591.63
P-Shape Universal End Panel	42.5066	98.00	120.54
P-Shape Universal End Panel - Beauforté	42.6066	173.00	212.79
BATH SCREENS			
C Shape Screen 6mm easy clean	69.0140	321.00	394.83
C Shape Screen 6mm with towel rail	69.0143	579.00	712.17

SHOWER
440 DEPTH
HEAD REST
ULTRA STRONG

1700 x 850 LH

NEW BEAUFORTÉ PANELS

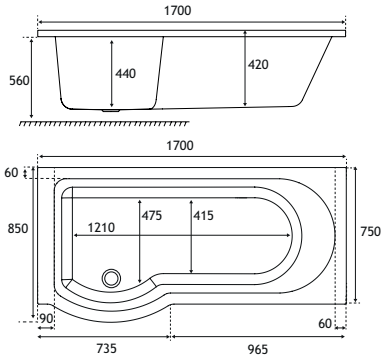

1700 x 850 x 750 x 440mm — **258 Litres**

DESCRIPTION	CODE	€ EX VAT	€ INC VAT
1700 x 850 LH Portland - 5mm	42.0185	665.00	817.95
1700 x 850 LH Portland - Beauforté	42.1185	1099.00	1351.77
PANELS			
1700 x 560 P-Shape Front Panel	42.5064	174.00	214.02
1700 x 560 P-Shape Front Panel - Beauforté	42.6064	481.00	591.63
P-Shape Universal End Panel	42.5066	98.00	120.54
P-Shape Universal End Panel - Beauforté	42.6066	173.00	212.79
BATH SCREENS			
C Shape Screen 6mm easy clean	69.0140	321.00	394.83
C Shape Screen 6mm with towel rail	69.0143	579.00	712.17

SHOWER
440 DEPTH
HEAD REST
ULTRA STRONG

1700 x 850 RH

NEW BEAUFORTÉ PANELS

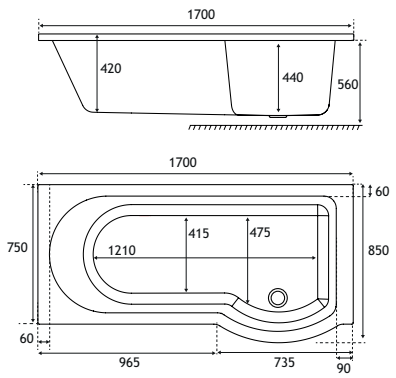

1700 x 850 x 750 x 440mm — **258 Litres**

DESCRIPTION	CODE	€ EX VAT	€ INC VAT
1700 x 850 RH Portland - 5mm	42.0186	665.00	817.95
1700 x 850 RH Portland - Beauforté	42.1186	1099.00	1351.77
PANELS			
1700 x 560 L-Shape Front Panel	42.5064	174.00	214.02
1700 x 560 P-Shape Front Panel - Beauforté	42.6064	481.00	591.63
P-Shape Universal End Panel	42.5066	98.00	120.54
P-Shape Universal End Panel - Beauforté	42.6066	173.00	212.79
BATH SCREENS			
C Shape Screen 6mm easy clean	69.0140	321.00	394.83
C Shape Screen 6mm with towel rail	69.0143	579.00	712.17

SHOWER
440 DEPTH
HEAD REST
ULTRA STRONG

Universal Fittings

ALL 5mm & Beauforté baths come complete with Universal Fittings such as legs, feet & wall brackets etc. Organised ready for your bath installer to fit with ease.

P-SHAPE Portland

Complete the LOOK

Description	Colour	Code	€ Ex VAT	€ Inc VAT
Abberton Bath Filler	Brushed Brass	79.1043	217.00	**266.91**
Modern Square Thermostatic Shower Pole	Brushed Brass	60.1006	408.00	**501.84**
P-Shape Bath Screen 6mm - Right Hand	Brushed Brass	49.2006	327.00	**402.21**

Brushed Brass colour shown in images are subject to the limitations of the printing process and may appear different.



Portland P-Shape RH shown

Biscay DOUBLE ENDED

Located in the curved gulf where the west coast of France meets the north of Spain, the Biscay sea region is notorious for some of the fiercest weather conditions of the Atlantic Ocean. The robust double ended Biscay bath is reminiscent of this region, with a distinctive rounded end corner surrounded by a 40mm deep ledge. This space efficient bath provides a large bathing area and is 440mm at its deepest point, ensuring a luxurious, comfortable soak.

The Biscay is available in left or right-handed bath variants, and in a choice of 1600x725mm, 1700x750mm, and 1700x800mm. The range is offered in both 5mm acrylic and ultra-strong Beauforté, which significantly extends the life of the bath.



PRODUCT FEATURES

- 12 models
- Each available in: 5mm Acrylic & Ultra Strong Beauforté
- Supplied without pre-drilled tap holes or waste fittings
- 440mm depth on all Biscay DE models
- Curved space saving style with one piece panel



Biscay DE Left Hand shown with Falmouth bath filler 93.0002

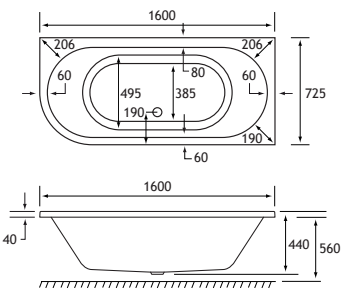

1600 x 725 DE RH

NEW BEAUFORTÉ PANELS

1600 x 725 x 440mm **188 Litres**

DESCRIPTION	CODE	€ EX VAT	€ INC VAT
1600 x 725 DE RH Biscay - 5mm	42.0056	489.00	601.47
1600 x 725 DE RH Biscay - Beauforté	42.1056	866.00	1065.18
PANELS			
Biscay Panel 1600 x 725	42.5003	317.00	389.91
Biscay Panel 1600 x 725 - Beauforté	42.6003	539.00	662.97

440 DEPTH

HEAD REST

ULTRA STRONG

DOUBLE ENDED Biscay

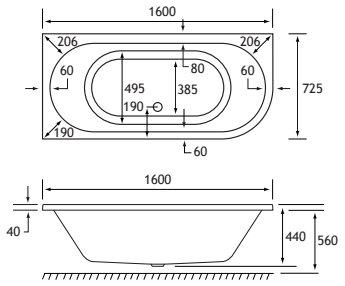

1600 x 725 DE LH

NEW BEAUFORTÉ PANELS

1600 x 725 x 440mm — **188 Litres**

DESCRIPTION	CODE	€ EX VAT	€ INC VAT
1600 x 725 DE LH Biscay - 5mm	42.0055	489.00	601.47
1600 x 725 DE LH Biscay - Beauforté	42.1055	866.00	1065.18
PANELS			
Biscay Panel 1600 x 725	42.5003	317.00	389.91
Biscay Panel 1600 x 725 - Beauforté	42.6003	539.00	662.97

440 DEPTH
HEAD REST
ULTRA STRONG

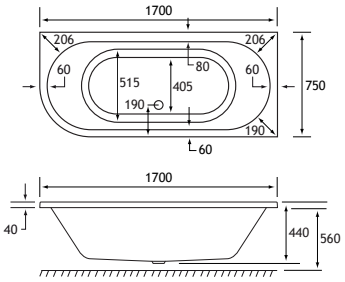

1700 x 750 DE RH

NEW BEAUFORTÉ PANELS

1700 x 750 x 440mm — **208 Litres**

DESCRIPTION	CODE	€ EX VAT	€ INC VAT
1700 x 750 DE RH Biscay - 5mm	42.0054	489.00	601.47
1700 x 750 DE RH Biscay - Beauforté	42.1054	866.00	1065.18
PANELS			
Biscay Panel 1700 x 750	42.5002	317.00	389.91
Biscay Panel 1700 x 750 - Beauforté	42.6002	539.00	662.97

440 DEPTH
HEAD REST
ULTRA STRONG

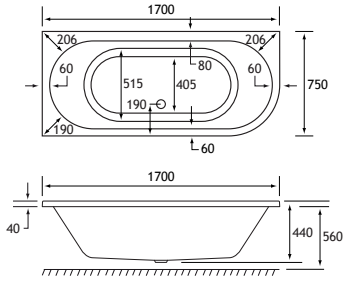

1700 x 750 DE LH

NEW BEAUFORTÉ PANELS

1700 x 750 x 440mm — **208 Litres**

DESCRIPTION	CODE	€ EX VAT	€ INC VAT
1700 x 750 DE LH Biscay - 5mm	42.0053	489.00	601.47
1700 x 750 DE LH Biscay - Beauforté	42.1053	866.00	1065.18
PANELS			
Biscay Panel 1700 x 750	42.5002	317.00	389.91
Biscay Panel 1700 x 750 - Beauforté	42.6002	539.00	662.97

440 DEPTH
HEAD REST
ULTRA STRONG

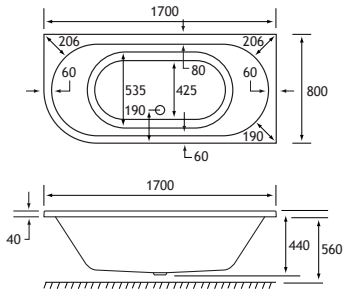

1700 x 800 DE RH

NEW BEAUFORTÉ PANELS

1700 x 800 x 440mm — **219 Litres**

DESCRIPTION	CODE	€ EX VAT	€ INC VAT
1700 x 800 DE RH Biscay - 5mm	42.0052	509.00	626.07
1700 x 800 DE RH Biscay - Beauforté	42.1052	892.00	1097.16
PANELS			
Biscay Panel 1700 x 800	42.5001	317.00	389.91
Biscay Panel 1700 x 800 - Beauforté	42.6001	539.00	662.97

440 DEPTH
HEAD REST
ULTRA STRONG

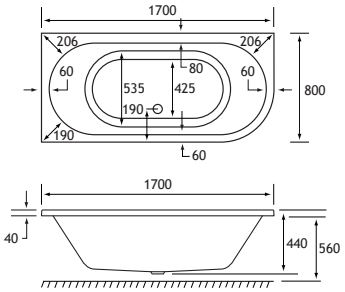

1700 x 800 DE LH

NEW BEAUFORTÉ PANELS

1700 x 800 x 440mm — **219 Litres**

DESCRIPTION	CODE	€ EX VAT	€ INC VAT
1700 x 800 DE LH Biscay - 5mm	42.0051	509.00	626.07
1700 x 800 DE LH Biscay - Beauforté	42.1051	892.00	1097.16
PANELS			
Biscay Panel 1700 x 800	42.5001	317.00	389.91
Biscay Panel 1700 x 800 - Beauforté	42.6001	539.00	662.97

440 DEPTH
HEAD REST
ULTRA STRONG

Biscay SINGLE ENDED, STRAIGHT EDGE

Located in the curved gulf where the west coast of France meets the north of Spain, the Biscay sea region is notorious for some of the fiercest weather conditions of the Atlantic Ocean. The robust double ended Biscay bath is reminiscent of this region, with straight end corners surrounded by a 40mm deep ledge. This space efficient bath provides a large bathing area and is 440mm at its deepest point, ensuring a luxurious, comfortable soak.

The Biscay is a luxury single ended bath which can be matched with square or rounded taps.
It's available in sizes 1700x700mm, 1700x750mm, and 1800x800mm. The range is offered in both 5mm acrylic and ultra-strong Beauforté, which significantly extends the life of the bath.



PRODUCT FEATURES

- 6 models
- Each available in: 5mm Acrylic & Ultra Strong Beauforté
- Supplied without pre-drilled tap holes or waste fittings
- 440mm depth on all SE Straight Edge models
- Square edge style bath with great top surface area



Bath Screens
Page 137-145

Biscay SE Straight Edge shown with Helston bath filler 93.0011

Adjustable bath panels on page 124 - 125

SINGLE ENDED, STRAIGHT EDGE Biscay

1700 x 700 SE

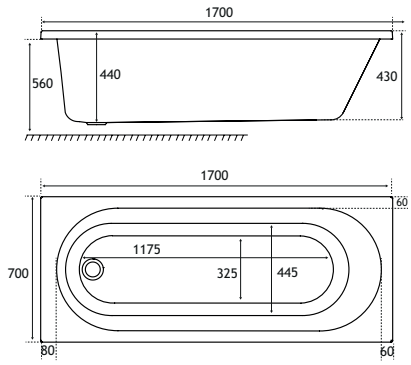

1700 x 700 x 440mm — **222 Litres**

DESCRIPTION	CODE	€ EX VAT	€ INC VAT
1700 x 700 SE Straight Edge - 5mm	42.0153	429.00	527.67
1700 x 700 SE Straight Edge - Beauforté	42.1153	773.00	950.79
PANELS			
1700 x 560 Front Panel	42.5013	160.00	196.80
700 x 560 End Panel	42.5024	97.00	119.31
1700 x 560 Front Panel - Beauforté	42.6013	269.00	330.87
700 x 560 End Panel - Beauforté	42.6024	160.00	196.80
1810 x 810 L Shape Flat Panel - Beauforté	42.6035	514.00	632.22
1700 Adjustable Front Panel - Beauforté	42.6033	388.00	477.24

SHOWER
440 DEPTH
HEAD REST
ULTRA STRONG

1700 x 750 SE

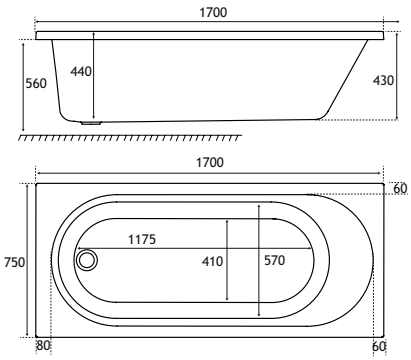

1700 x 750 x 440mm — **233 Litres**

DESCRIPTION	CODE	€ EX VAT	€ INC VAT
1700 x 750 SE Straight Edge - 5mm	42.0152	531.00	653.13
1700 x 750 SE Straight Edge - Beauforté	42.1152	916.00	1126.68
PANELS			
1700 x 560 Front Panel	42.5013	160.00	196.80
750x560 End Panel	42.5023	97.00	119.31
1700 x 560 Front Panel - Beauforté	42.6013	269.00	330.87
750 x 560 End Panel - Beauforté	42.6023	160.00	196.80
1810 x 810 L Shape Flat Panel - Beauforté	42.6035	514.00	632.22
1700 Adjustable Front Panel - Beauforté	42.6033	388.00	477.24

SHOWER
440 DEPTH
HEAD REST
ULTRA STRONG

1800 x 800 SE

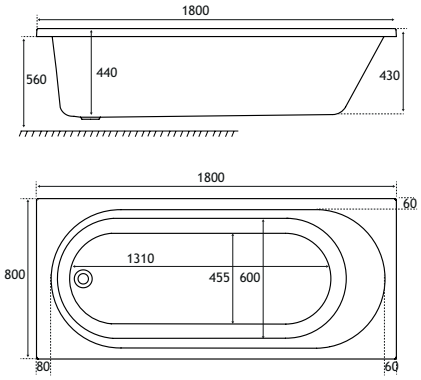

1800 x 800 x 440mm — **264 Litres**

DESCRIPTION	CODE	€ EX VAT	€ INC VAT
1800 x 800 SE Straight Edge - 5mm	42.0151	630.00	774.90
1800 x 800 SE Straight Edge - Beauforté	42.1151	1059.00	1302.57
PANELS			
1800 x 560 Front Panel	42.5012	178.00	218.94
800x560 End Panel	42.5022	97.00	119.31
1800 x 560 Front Panel - Beauforté	42.6012	285.00	350.55
800 x 560 End Panel - Beauforté	42.6022	174.00	214.02
1810 x 810 L Shape Flat Panel - Beauforté	42.6035	514.00	632.22
1800 Adjustable Front Panel - Beauforté	42.6032	404.00	496.92

SHOWER
440 DEPTH
HEAD REST
ULTRA STRONG

Universal Fittings

ALL 5mm & Beauforté baths come complete with Universal Fittings such as legs, feet & wall brackets etc. Organised ready for your bath installer to fit with ease.



Biscay DOUBLE ENDED, STRAIGHT EDGE

Located in the curved gulf where the west coast of France meets the north of Spain, the Biscay sea region is notorious for some of the fiercest weather conditions of the Atlantic Ocean. The robust double ended Biscay bath is reminiscent of this region, with straight end corners surrounded by a 40mm deep ledge. This space efficient bath provides a large bathing area and is 440mm at its deepest point, ensuring a luxurious, comfortable soak.

The Biscay is a luxury double ended bath which can be matched with square or rounded taps.
It's available in sizes 1700x700mm, 1700x750mm, and 1800x800mm. The range is offered in both 5mm acrylic and ultra-strong Beauforté, which significantly extends the life of the bath.



PRODUCT FEATURES

- 6 models
- Each available in: 5mm Acrylic & Ultra Strong Beauforté
- Supplied without pre-drilled tap holes or waste fittings
- 440mm depth on all DE Straight Edge models
- Square edge style bath with great top surface area



Biscay DE Straight Edge shown with Helston bath filler 93.0011

Adjustable bath panels on page 124 - 125

DOUBLE ENDED, STRAIGHT EDGE Biscay

1700 x 700 DE

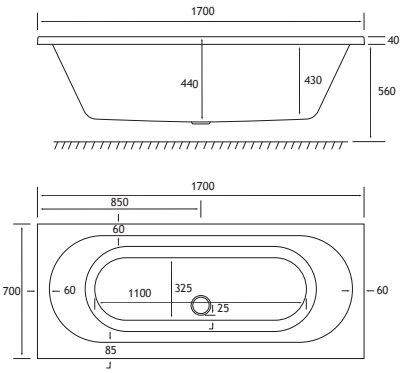

1700 x 700 x 440mm — **212 Litres**

DESCRIPTION	CODE	€ EX VAT	€ INC VAT
1700 x 700 DE Straight Edge - 5mm	42.0143	458.00	563.34
1700 x 700 DE Straight Edge - Beauforté	42.1143	821.00	1009.83
PANELS			
1700 x 560 Front Panel	42.5013	160.00	196.80
700 x 560 End Panel	42.5024	97.00	119.31
1700 x 560 Front Panel - Beauforté	42.6013	269.00	330.87
700 x 560 End Panel - Beauforté	42.6024	160.00	196.80
1810 x 810 L Shape Flat Panel - Beauforté	42.6035	514.00	632.22
1700 Adjustable Front Panel - Beauforté	42.6033	388.00	477.24

440 DEPTH
HEAD REST
ULTRA STRONG

1700 x 750 DE

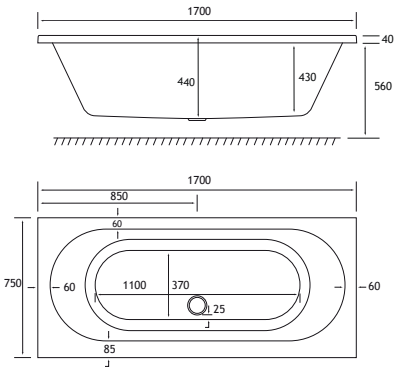

1700 x 750 x 440mm — **223 Litres**

DESCRIPTION	CODE	€ EX VAT	€ INC VAT
1700 x 750 DE Straight Edge - 5mm	42.0142	553.00	680.19
1700 x 750 DE Straight Edge - Beauforté	42.1142	958.00	1178.34
PANELS			
1700 x 560 Front Panel	42.5013	160.00	196.80
750x560 End Panel	42.5023	97.00	119.31
1700 x 560 Front Panel - Beauforté	42.6013	269.00	330.87
750 x 560 End Panel - Beauforté	42.6023	160.00	196.80
1810 x 810 L Shape Flat Panel - Beauforté	42.6035	514.00	632.22
1700 Adjustable Front Panel - Beauforté	42.6033	388.00	477.24

440 DEPTH
HEAD REST
ULTRA STRONG

1800 x 800 DE

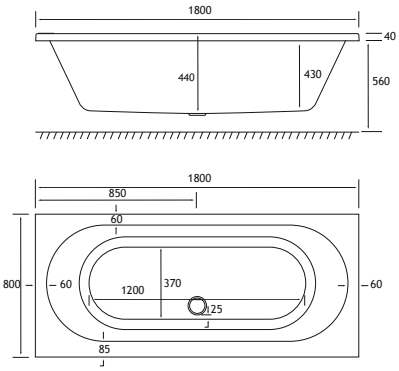

1800 x 800 x 440mm — **254 Litres**

DESCRIPTION	CODE	€ EX VAT	€ INC VAT
1800 x 800 DE Straight Edge - 5mm	42.0141	656.00	806.88
1800 x 800 DE Straight Edge - Beauforté	42.1141	1106.00	1360.38
PANELS			
1800 x 560 Front Panel	42.5012	178.00	218.94
800x560 End Panel	42.5022	97.00	119.31
1800 x 560 Front Panel - Beauforté	42.6012	285.00	350.55
800 x 560 End Panel - Beauforté	42.6022	174.00	214.02
1810 x 810 L Shape Flat Panel - Beauforté	42.6035	514.00	632.22
1800 Adjustable Front Panel - Beauforté	42.6032	404.00	496.92

440 DEPTH
HEAD REST
ULTRA STRONG

Universal Fittings

ALL 5mm & Beauforté baths come complete with Universal Fittings such as legs, feet & wall brackets etc. Organised ready for your bath installer to fit with ease.



Biscay SHOWER BATH

Located in the curved gulf where the west coast of France meets the north of Spain, the Biscay sea region is notorious for some of the fiercest weather conditions of the Atlantic Ocean. The robust double ended Biscay bath is reminiscent of this region, with straight end corners surrounded by a 40mm deep ledge. This space efficient bath provides a large bathing area and is 440mm at its deepest point, ensuring a luxurious, comfortable soak.

The Biscay is a luxury bath which can be matched with square or rounded taps.
It's available in sizes 1700/700mm, 1700/750mm, and 1800/800mm. The range is offered in both 5mm acrylic and ultra-strong Beauforté, which significantly extends the life of the bath.



PRODUCT FEATURES

- 12 models
- Each available in: 5mm Acrylic & Ultra Strong Beauforté
- Supplied without pre-drilled tap holes or waste fittings
- 440mm depth on all Biscay Shower Bath models

Bath Screens
Page 137-145

Complete The Look

Description	Colour	Code	€ Ex VAT	€ Inc VAT
6mm Hinge Bath Screen	Matt Black	49.1101	287.00	**353.01**

Biscay Shower Bath LH shown with Helston bath filler 93.0020

SHOWER BATH Biscay

1700 x 700 SB RH

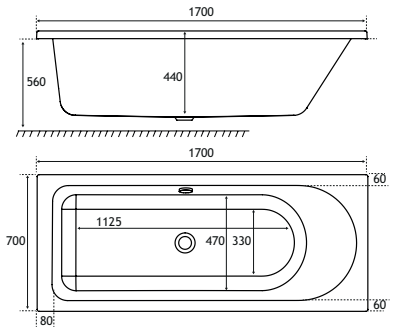

1700 x 700 x 440mm **216 Litres**

DESCRIPTION	CODE	€ EX VAT	€ INC VAT
1700 x 700 Biscay SB RH - 5mm	42.0216	444.00	546.12
1700 x 700 Biscay SB RH - Beauforté	42.1216	801.00	985.23
PANELS			
1700 x 560 Front Panel	42.5013	160.00	196.80
700 x 560 End Panel	42.5024	97.00	119.31
1700 x 560 Front Panel - Beauforté	42.6013	269.00	330.87
700 x 560 End Panel - Beauforté	42.6024	160.00	196.80
1810 x 810 L Shape Flat Panel - Beauforté	42.6035	514.00	632.22
1700 Adjustable Front Panel - Beauforté	42.6033	388.00	477.24

SHOWER
440 DEPTH
HEAD REST
ULTRA STRONG

1700 x 700 SB LH

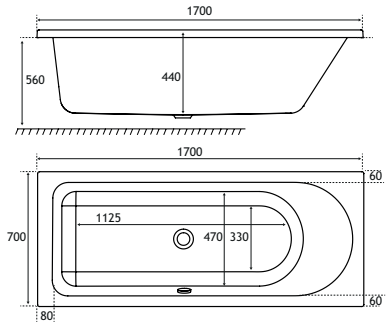

1700 x 700 x 440mm **216 Litres**

DESCRIPTION	CODE	€ EX VAT	€ INC VAT
1700 x 700 Biscay SB LH - 5mm	42.0215	444.00	546.12
1700 x 700 Biscay SB LH - Beauforté	42.1215	801.00	985.23
PANELS			
1700 x 560 Front Panel	42.5013	160.00	196.80
700 x 560 End Panel	42.5024	97.00	119.31
1700 x 560 Front Panel - Beauforté	42.6013	269.00	330.87
700 x 560 End Panel - Beauforté	42.6024	160.00	196.80
1810 x 810 L Shape Flat Panel - Beauforté	42.6035	514.00	632.22
1700 Adjustable Front Panel - Beauforté	42.6033	388.00	477.24

SHOWER
440 DEPTH
HEAD REST
ULTRA STRONG



Biscay Shower Bath RH shown.

Biscay SHOWER BATH

1700 x 750 SB RH

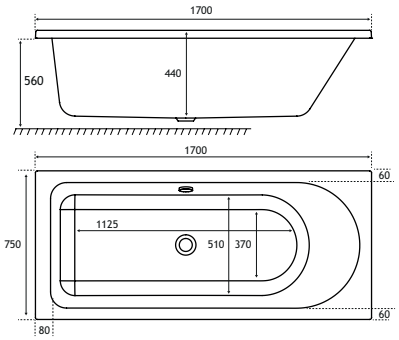

1700 x 750 x 440mm — **234 Litres**

DESCRIPTION	CODE	€ EX VAT	€ INC VAT
1700 x 750 Biscay SB RH - 5mm	42.0214	551.00	677.73
1700 x 750 Biscay SB RH - Beauforté	42.1214	952.00	1170.96
PANELS			
1700 x 560 Front Panel	42.5013	160.00	196.80
750 x 560 End Panel	42.5023	97.00	119.31
1700 x 560 Front Panel - Beauforté	42.6013	269.00	330.87
750 x 560 End Panel - Beauforté	42.6023	160.00	196.80
1810 x 810 L Shape Flat Panel - Beauforté	42.6035	514.00	632.22
1700 Adjustable Front Panel - Beauforté	42.6033	388.00	477.24

SHOWER
440 DEPTH
HEAD REST
ULTRA STRONG

1700 x 750 SB LH

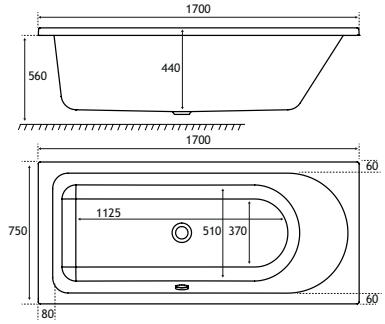

1700 x 750 x 440mm — **234 Litres**

DESCRIPTION	CODE	€ EX VAT	€ INC VAT
1700 x 750 Biscay SB LH - 5mm	42.0213	551.00	677.73
1700 x 750 Biscay SB LH - Beauforté	42.1213	952.00	1170.96
PANELS			
1700 x 560 Front Panel	42.5013	160.00	196.80
750 x 560 End Panel	42.5023	97.00	119.31
1700 x 560 Front Panel - Beauforté	42.6013	269.00	330.87
750 x 560 End Panel - Beauforté	42.6023	160.00	196.80
1810 x 810 L Shape Flat Panel - Beauforté	42.6035	514.00	632.22
1700 Adjustable Front Panel - Beauforté	42.6033	388.00	477.24

SHOWER
440 DEPTH
HEAD REST
ULTRA STRONG

1800 x 800 SB RH

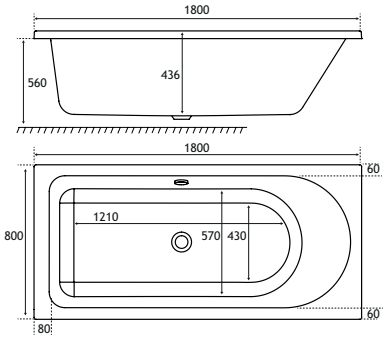

1800 x 800 x 440mm — **268 Litres**

DESCRIPTION	CODE	€ EX VAT	€ INC VAT
1800 x 800 Biscay SB RH - 5mm	42.0212	656.00	806.88
1800 x 800 Biscay SB RH - Beauforté	42.1212	1101.00	1354.23
PANELS			
1800 x 560 Front Panel	42.5012	178.00	218.94
800 x 560 End Panel	42.5022	97.00	119.31
1800 x 560 Front Panel - Beauforté	42.6012	285.00	350.55
800 x 560 End Panel - Beauforté	42.6022	174.00	214.02
1810 x 810 L Shape Flat Panel - Beauforté	42.6035	514.00	632.22
1800 Adjustable Front Panel - Beauforté	42.6032	404.00	496.92

SHOWER
440 DEPTH
HEAD REST
ULTRA STRONG

1800 x 800 SB LH

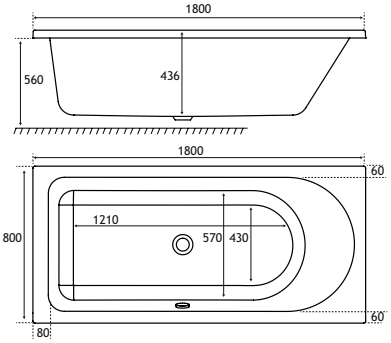

1800 x 800 x 440mm — **268 Litres**

DESCRIPTION	CODE	€ EX VAT	€ INC VAT
1800 x 800 Biscay SB LH - 5mm	42.0211	656.00	806.88
1800 x 800 Biscay SB LH - Beauforté	42.1211	1101.00	1354.23
PANELS			
1800 x 560 Front Panel	42.5012	178.00	218.94
800 x 560 End Panel	42.5022	97.00	119.31
1800 x 560 Front Panel - Beauforté	42.6012	285.00	350.55
800 x 560 End Panel - Beauforté	42.6022	174.00	214.02
1810 x 810 L Shape Flat Panel - Beauforté	42.6035	514.00	632.22
1800 Adjustable Front Panel - Beauforté	42.6032	404.00	496.92

SHOWER
440 DEPTH
HEAD REST
ULTRA STRONG

SHOWER BATH Biscay

Bath Screens
Page 137-145



Biscay Shower Bath RH shown with Helston bath filler 93.0020

Universal Fittings

ALL 5mm & Beauforté baths come complete with Universal Fittings such as legs, feet & wall brackets etc. Organised ready for your bath installer to fit with ease.



Rockall SINGLE ENDED

The Rockall sea region is located off the west coast of Ireland and is where the largest wave ever recorded by a shipping vessel was encountered. The Rockall bath is evocative of this region, in a functional, sturdy, yet stylish design. Comfortably proportioned, this single-ended bath features a modern, angular look and perfectly complements the latest square profile sanitaryware and taps. The back end of the bath is curved for comfort and the silky finish gives it a luxurious appeal.

The Rockall is available in a wide range of bath sizes and in a choice of thickness - 5mm acrylic or ultra-strong Beauforté, which significantly extends the life of the bath.



PRODUCT FEATURES

- 22 models
- Each available in: 5mm Acrylic & Ultra Strong Beauforté
- Supplied without pre-drilled tap holes or waste fittings
- 440mm depth on all Rockall SE models
- Sloping back rest at one end for lumbar support

Bath Screens
Page 137-145

Rockall SE shown.

For bath screens see page 137-145 Adjustable bath panels on page 124 - 125

SINGLE ENDED Rockall

1400 x 700 SE

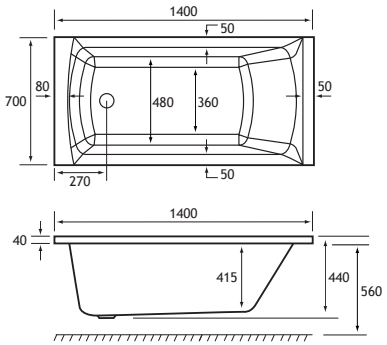

1400 x 700 x 440mm — **180 Litres**

DESCRIPTION	CODE	€ EX VAT	€ INC VAT
1400 x 700 Rockall - 5mm	42.0090	398.00	489.54
1400 x 700 Rockall - Beauforté	42.1090	730.00	897.90
PANELS			
1500 x 560 Front Panel*	42.5017	160.00	196.80
700 x 560 End Panel	42.5024	97.00	119.31
1500 x 560 Front Panel - Beauforté*	42.6017	269.00	330.87
700 x 560 End Panel - Beauforté	42.6024	160.00	196.80
1810 x 810 L Shape Flat Panel - Beauforté	42.6035	514.00	632.22

*Panel requires cutting down.

SHOWER
440 DEPTH
HEAD REST
ULTRA STRONG

1500 x 700 SE

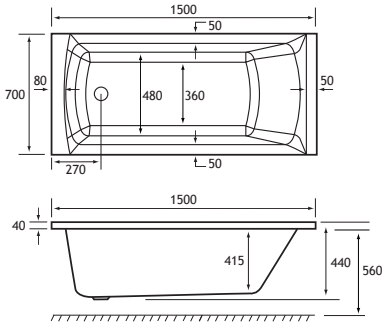

1500 x 700 x 440mm — **191 Litres**

DESCRIPTION	CODE	€ EX VAT	€ INC VAT
1500 x 700 Rockall - 5mm	42.0091	398.00	489.54
1500 x 700 Rockall - Beauforté	42.1091	730.00	897.90
PANELS			
1500 x 560 Front Panel	42.5017	160.00	196.80
700 x 560 End Panel	42.5024	97.00	119.31
1500 x 560 Front Panel - Beauforté	42.6017	269.00	330.87
700 x 560 End Panel - Beauforté	42.6024	160.00	196.80
1500 Adjustable Front Panel - Beauforté	42.6034	388.00	477.24
1810 x 810 L Shape Flat Panel - Beauforté	42.6035	514.00	632.22

SHOWER
440 DEPTH
HEAD REST
ULTRA STRONG

1600 x 700 SE

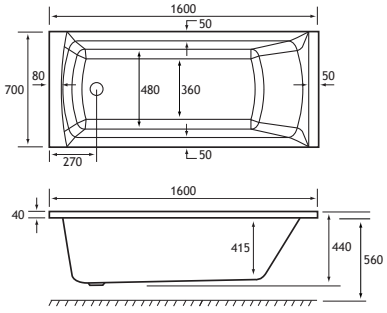

1600 x 700 x 440mm — **213 Litres**

DESCRIPTION	CODE	€ EX VAT	€ INC VAT
1600 x 700 Rockall - 5mm	42.0089	398.00	489.54
1600 x 700 Rockall - Beauforté	42.1089	730.00	897.90
PANELS			
1600 x 560 Front Panel	42.5016	160.00	196.80
700 x 560 End Panel	42.5024	97.00	119.31
1600 x 560 Front Panel - Beauforté	42.6016	269.00	330.87
700 x 560 End Panel - Beauforté	42.6024	160.00	196.80
1810 x 810 L Shape Flat Panel - Beauforté	42.6035	514.00	632.22

SHOWER
440 DEPTH
HEAD REST
ULTRA STRONG

1600 x 750 SE

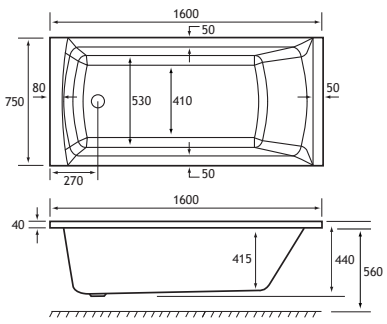

1600 x 750 x 440mm — **229 Litres**

DESCRIPTION	CODE	€ EX VAT	€ INC VAT
1600 x 750 Rockall - 5mm	42.0085	492.00	605.16
1600 x 750 Rockall - Beauforté	42.1085	870.00	1070.10
PANELS			
1600 x 560 Front Panel	42.5016	160.00	196.80
750x560 End Panel	42.5023	97.00	119.31
1600 x 560 Front Panel - Beauforté	42.6016	269.00	330.87
750 x 560 End Panel - Beauforté	42.6023	160.00	196.80
1810 x 810 L Shape Flat Panel - Beauforté	42.6035	514.00	632.22

SHOWER
440 DEPTH
HEAD REST
ULTRA STRONG

Rockall SINGLE ENDED

1650 x 700 SE

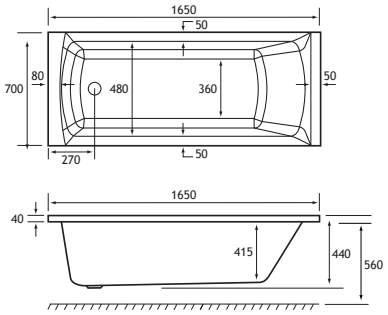

1650 x 700 x 440mm — **229 Litres**

DESCRIPTION	CODE	€ EX VAT	€ INC VAT
1650 x 700 Rockall - 5mm	42.0088	398.00	489.54
1650 x 700 Rockall - Beauforté	42.1088	730.00	897.90
PANELS			
1650 x 560 Front Panel	42.5015	160.00	196.80
700 x 560 End Panel	42.5024	97.00	119.31
1650 x 560 Front Panel - Beauforté	42.6015	269.00	330.87
700 x 560 End Panel - Beauforté	42.6024	160.00	196.80
1810 x 810 L Shape Flat Panel - Beauforté	42.6035	514.00	632.22

SHOWER
440 DEPTH
HEAD REST
ULTRA STRONG

1675 x 700 [5'6"] SE

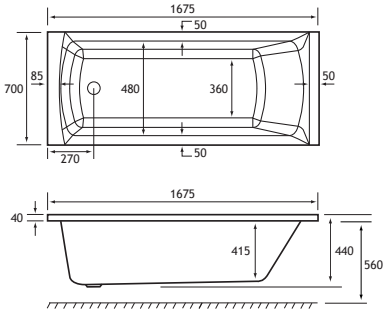

1675 x 700 x 440mm — **234 Litres**

DESCRIPTION	CODE	€ EX VAT	€ INC VAT
1675 x 700 [5'6"] Rockall - 5mm	42.0087	398.00	489.54
1675 x 700 [5'6"] Rockall - Beauforté	42.1087	730.00	897.90
PANELS			
1675 x 560 Front Panel	42.5014	160.00	196.80
700 x 560 End Panel	42.5024	97.00	119.31
1675 x 560 Front Panel - Beauforté	42.6014	269.00	330.87
700 x 560 End Panel - Beauforté	42.6024	160.00	196.80
1810 x 810 L Shape Flat Panel - Beauforté	42.6035	514.00	632.22

SHOWER
440 DEPTH
HEAD REST
ULTRA STRONG

1700 x 700 SE

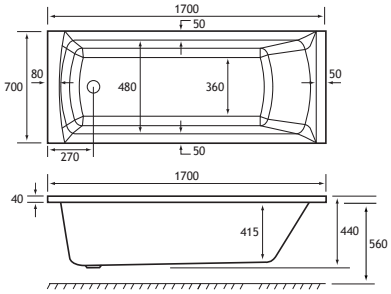

1700 x 700 x 440mm — **238 Litres**

DESCRIPTION	CODE	€ EX VAT	€ INC VAT
1700 x 700 Rockall - 5mm	42.0086	398.00	489.54
1700 x 700 Rockall - Beauforté	42.1086	730.00	897.90
PANELS			
1700 x 560 Front Panel	42.5013	160.00	196.80
700 x 560 End Panel	42.5024	97.00	119.31
1700 x 560 Front Panel - Beauforté	42.6013	269.00	330.87
700 x 560 End Panel - Beauforté	42.6024	160.00	196.80
1700 Adjustable Front Panel - Beauforté	42.6033	388.00	477.24
1810 x 810 L Shape Flat Panel - Beauforté	42.6035	514.00	632.22

SHOWER
440 DEPTH
HEAD REST
ULTRA STRONG

1700 x 750 SE

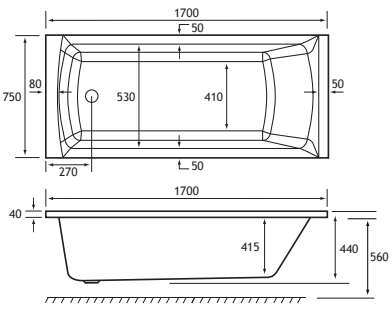

1700 x 750 x 440mm — **268 Litres**

DESCRIPTION	CODE	€ EX VAT	€ INC VAT
1700 x 750 Rockall - 5mm	42.0084	490.00	602.70
1700 x 750 Rockall - Beauforté	42.1084	868.00	1067.64
PANELS			
1700 x 560 Front Panel	42.5013	160.00	196.80
750x560 End Panel	42.5023	97.00	119.31
1700 x 560 Front Panel - Beauforté	42.6013	269.00	330.87
750 x 560 End Panel - Beauforté	42.6023	160.00	196.80
1700 Adjustable Front Panel - Beauforté	42.6033	388.00	477.24
1810 x 810 L Shape Flat Panel - Beauforté	42.6035	514.00	632.22

SHOWER
440 DEPTH
HEAD REST
ULTRA STRONG

SINGLE ENDED Rockall

1700 x 800 SE

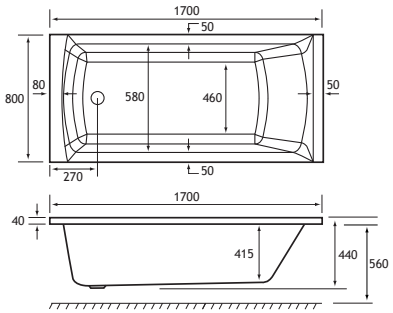

1700 x 800 x 440mm — **264 Litres**

DESCRIPTION	CODE	€ EX VAT	€ INC VAT
1700 x 800 Rockall - 5mm	42.0083	542.00	666.66
1700 x 800 Rockall - Beauforté	42.1083	940.00	1156.20
PANELS			
1700 x 560 Front Panel	42.5013	160.00	196.80
800x560 End Panel	42.5022	97.00	119.31
1700 x 560 Front Panel - Beauforté	42.6013	269.00	330.87
800 x 560 End Panel - Beauforté	42.6022	174.00	214.02
1700 Adjustable Front Panel - Beauforté	42.6033	388.00	477.24
1810 x 810 L Shape Flat Panel - Beauforté	42.6035	514.00	632.22

SHOWER
440 DEPTH
HEAD REST
ULTRA STRONG

1800 x 800 SE

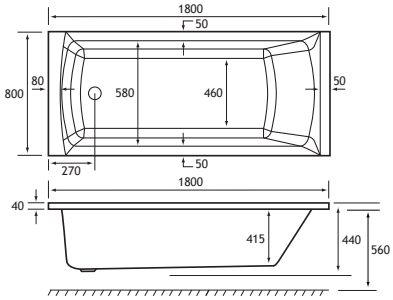

1800 x 800 x 440mm — **284 Litres**

DESCRIPTION	CODE	€ EX VAT	€ INC VAT
1800 x 800 Rockall - 5mm	42.0082	586.00	720.78
1800 x 800 Rockall - Beauforté	42.1082	1006.00	1237.38
PANELS			
1800 x 560 Front Panel	42.5012	178.00	218.94
800x560 End Panel	42.5022	97.00	119.31
1800 x 560 Front Panel - Beauforté	42.6012	285.00	350.55
800 x 560 End Panel - Beauforté	42.6022	174.00	214.02
1800 Adjustable Front Panel - Beauforté	42.6032	404.00	496.92
1810 x 810 L Shape Flat Panel - Beauforté	42.6035	514.00	632.22

SHOWER
440 DEPTH
HEAD REST
ULTRA STRONG

1900 x 900 SE

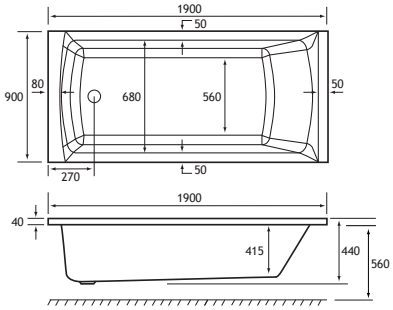

1900 x 900 x 440mm — **374 Litres**

DESCRIPTION	CODE	€ EX VAT	€ INC VAT
1900 x 900 SE Rockall - 5mm	42.0081	793.00	975.39
1900 x 900 SE Rockall - Beauforté	42.1081	1302.00	1601.46
PANELS			
1900 x 560 Front Panel	42.5011	229.00	281.67
900x560 End Panel	42.5021	97.00	119.31
1900 x 560 Front Panel - Beauforté	42.6011	335.00	412.05
900 x 560 End Panel - Beauforté	42.6021	192.00	236.16

SHOWER
440 DEPTH
HEAD REST
ULTRA STRONG



Rockall SE shown.

Adjustable bath panels on page 124 - 125

Rockall SINGLE ENDED, TWIN GRIP

The Rockall sea region is located off the west coast of Ireland and is where the largest wave ever recorded by a shipping vessel was encountered. The Rockall bath is evocative of this region, in a functional, sturdy, yet stylish design. Comfortably proportioned, this single-ended bath features a modern, angular look and perfectly complements the latest square profile sanitaryware and taps. The back end of the bath is curved for comfort and the silky finish gives it a luxurious appeal.

The Rockall is available in a wide range of bath sizes and in a choice of thickness - 5mm acrylic or ultra-strong Beauforté, which significantly extends the life of the bath.



PRODUCT FEATURES

- 22 models
- Each available in: 5mm Acrylic & Ultra Strong Beauforté
- Supplied without pre-drilled tap holes or waste fittings
- 440mm depth on all Rockall SE models
- Twin grips available in 6 colours (Sold separately)



Bath Screens
Page 137-145

Rockall SE TG shown with Helston bath filler 93.0011

Adjustable bath panels on page 124 - 125

SINGLE ENDED, TWIN GRIP Rockall

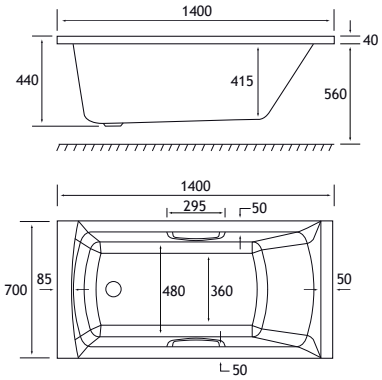

1400 x 700 SE TG

Grips Sold Separately Page 87

1400 x 700 x 440mm — **180 Litres**

DESCRIPTION	CODE	€ EX VAT	€ INC VAT
1400 x 700 TG Rockall - 5mm	42.0131	406.00	499.38
1400 x 700 TG Rockall - Beauforté	42.1131	742.00	912.66
PANELS			
1500 x 560 Front Panel*	42.5017	160.00	196.80
700 x 560 End Panel	42.5024	97.00	119.31
1500 x 560 Front Panel - Beauforté*	42.6017	269.00	330.87
700 x 560 End Panel - Beauforté	42.6024	160.00	196.80
1810 x 810 L Shape Flat Panel - Beauforté	42.6035	514.00	632.22

*Panel requires cutting down.

SHOWER
440 DEPTH
HEAD REST
ULTRA STRONG

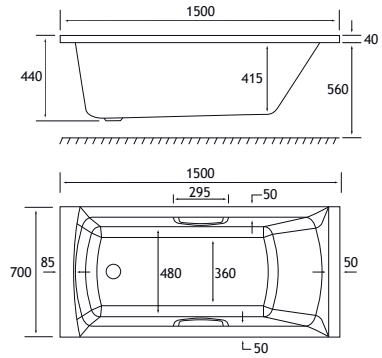

1500 x 700 SE TG

Grips Sold Separately Page 87

1500 x 700 x 440mm — **191 Litres**

DESCRIPTION	CODE	€ EX VAT	€ INC VAT
1500 x 700 TG Rockall - 5mm	42.0130	406.00	499.38
1500 x 700 TG Rockall - Beauforté	42.1130	742.00	912.66
PANELS			
1500 x 560 Front Panel	42.5017	160.00	196.80
700 x 560 End Panel	42.5024	97.00	119.31
1500 x 560 Front Panel - Beauforté	42.6017	269.00	330.87
700 x 560 End Panel - Beauforté	42.6024	160.00	196.80
1500 Adjustable Front Panel - Beauforté	42.6034	388.00	477.24
1810 x 810 L Shape Flat Panel - Beauforté	42.6035	514.00	632.22

SHOWER
440 DEPTH
HEAD REST
ULTRA STRONG

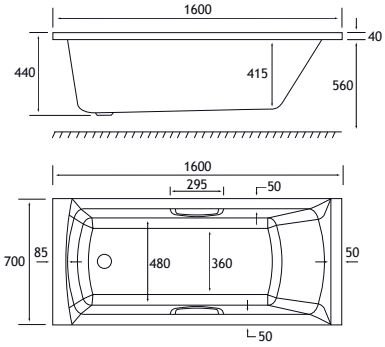

1600 x 700 SE TG

Grips Sold Separately Page 87

1600 x 700 x 440mm — **213 Litres**

DESCRIPTION	CODE	€ EX VAT	€ INC VAT
1600 x 700 TG Rockall - 5mm	42.0129	406.00	499.38
1600 x 700 TG Rockall - Beauforté	42.1129	742.00	912.66
PANELS			
1600 x 560 Front Panel	42.5016	160.00	196.80
700 x 560 End Panel	42.5024	97.00	119.31
1600 x 560 Front Panel - Beauforté	42.6016	269.00	330.87
700 x 560 End Panel - Beauforté	42.6024	160.00	196.80
1810 x 810 L Shape Flat Panel - Beauforté	42.6035	514.00	632.22

SHOWER
440 DEPTH
HEAD REST
ULTRA STRONG

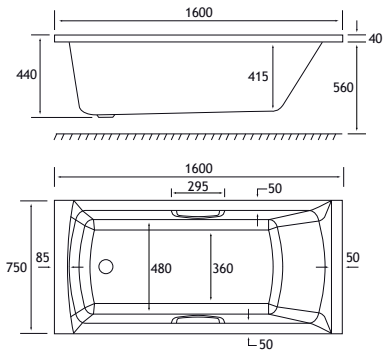

1600 x 750 SE TG

Grips Sold Separately Page 87

1600 x 750 x 440mm — **229 Litres**

DESCRIPTION	CODE	€ EX VAT	€ INC VAT
1600 x 750 TG Rockall - 5mm	42.0125	504.00	619.92
1600 x 750 TG Rockall - Beauforté	42.1125	885.00	1088.55
PANELS			
1600 x 560 Front Panel	42.5016	160.00	196.80
750 x 560 End Panel	42.5023	97.00	119.31
1600 x 560 Front Panel - Beauforté	42.6016	269.00	330.87
750 x 560 End Panel - Beauforté	42.6023	160.00	196.80
1810 x 810 L Shape Flat Panel - Beauforté	42.6035	514.00	632.22

SHOWER
440 DEPTH
HEAD REST
ULTRA STRONG

Rockall SINGLE ENDED, TWIN GRIP

1650 x 700 SE TG Grips Sold Separately

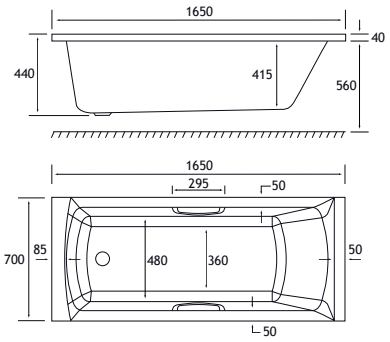

1650 x 700 x 440mm — **229 Litres**

DESCRIPTION	CODE	€ EX VAT	€ INC VAT
1650 x 700 TG Rockall - 5mm	42.0128	406.00	499.38
1650 x 700 TG Rockall - Beauforté	42.1128	742.00	912.66
PANELS			
1650 x 560 Front Panel	42.5015	160.00	196.80
700 x 560 End Panel	42.5024	97.00	119.31
1650 x 560 Front Panel - Beauforté	42.6015	269.00	330.87
700 x 560 End Panel - Beauforté	42.6024	160.00	196.80
1810 x 810 L Shape Flat Panel - Beauforté	42.6035	514.00	632.22

SHOWER
440 DEPTH
HEAD REST
ULTRA STRONG

1675 x 700 [5'6"] SE TG Grips Sold Separately

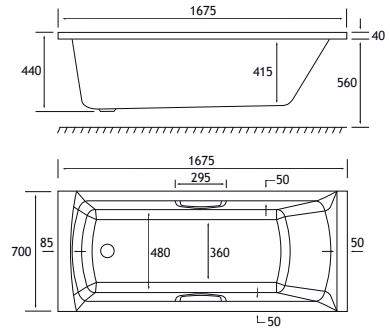

1675 x 700 x 440mm — **234 Litres**

DESCRIPTION	CODE	€ EX VAT	€ INC VAT
1675 x 700 TG Rockall - 5mm	42.0127	406.00	499.38
1675 x 700 TG Rockall - Beauforté	42.1127	742.00	912.66
PANELS			
1675 x 560 Front Panel	42.5014	160.00	196.80
700 x 560 End Panel	42.5024	97.00	119.31
1675 x 560 Front Panel - Beauforté	42.6014	269.00	330.87
700 x 560 End Panel - Beauforté	42.6024	160.00	196.80
1810 x 810 L Shape Flat Panel - Beauforté	42.6035	514.00	632.22

SHOWER
440 DEPTH
HEAD REST
ULTRA STRONG

1700 x 700 SE TG Grips Sold Separately

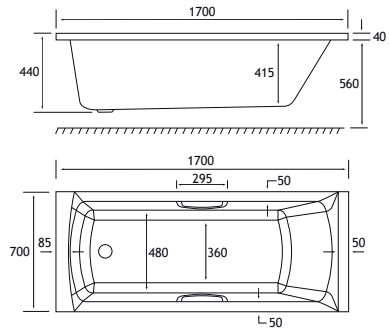

1700 x 700 x 440mm — **238 Litres**

DESCRIPTION	CODE	€ EX VAT	€ INC VAT
1700 x 700 TG Rockall - 5mm	42.0126	406.00	499.38
1700 x 700 TG Rockall - Beauforté	42.1126	742.00	912.66
PANELS			
1700 x 560 Front Panel	42.5013	160.00	196.80
700 x 560 End Panel	42.5024	97.00	119.31
1700 x 560 Front Panel - Beauforté	42.6013	269.00	330.87
700 x 560 End Panel - Beauforté	42.6024	160.00	196.80
1700 Adjustable Front Panel - Beauforté	42.6033	388.00	477.24
1810 x 810 L Shape Flat Panel - Beauforté	42.6035	514.00	632.22

SHOWER
440 DEPTH
HEAD REST
ULTRA STRONG

1700 x 750 SE TG Grips Sold Separately

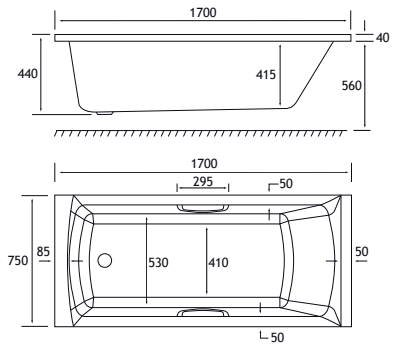

1700 x 750 x 440mm — **268 Litres**

DESCRIPTION	CODE	€ EX VAT	€ INC VAT
1700 x 750 TG Rockall - 5mm	42.0124	503.00	618.69
1700 x 750 TG Rockall - Beauforte	42.1124	882.00	1084.86
PANELS			
1700 x 560 Front Panel	42.5013	160.00	196.80
750x560 End Panel	42.5023	97.00	119.31
1700 x 560 Front Panel - Beauforté	42.6013	269.00	330.87
750 x 560 End Panel - Beauforté	42.6023	160.00	196.80
1700 Adjustable Front Panel - Beauforté	42.6033	388.00	477.24
1810 x 810 L Shape Flat Panel - Beauforté	42.6035	514.00	632.22

SHOWER
440 DEPTH
HEAD REST
ULTRA STRONG

SINGLE ENDED, TWIN GRIP Rockall

1700 x 800 SE TG Grips Sold Separately

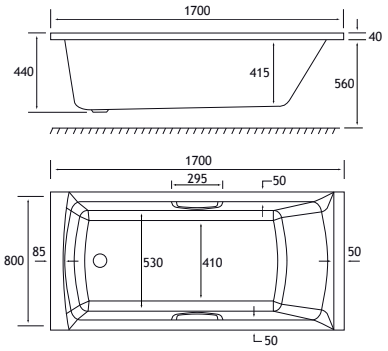

1700 x 800 x 440mm **264 Litres**

DESCRIPTION	CODE	€ EX VAT	€ INC VAT
1700 x 800 TG Rockall - 5mm	42.0123	558.00	686.34
1700 x 800 TG Rockall - Beauforté	42.1123	958.00	1178.34
PANELS			
1700 x 560 Front Panel	42.5013	160.00	196.80
800 x 560 End Panel	42.5022	97.00	119.31
1700 x 560 Front Panel - Beauforté	42.6013	269.00	330.87
800 x 560 End Panel - Beauforté	42.6022	174.00	214.02
1700 Adjustable Front Panel - Beauforté	42.6033	388.00	477.24
1810 x 810 L Shape Flat Panel - Beauforté	42.6035	514.00	632.22

SHOWER
440 DEPTH
HEAD REST
ULTRA STRONG

1800 x 800 SE TG Grips Sold Separately

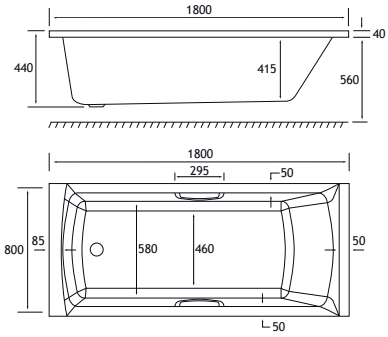

1800 x 800 x 440mm **284 Litres**

DESCRIPTION	CODE	€ EX VAT	€ INC VAT
1800 x 800 TG Rockall - 5mm	42.0122	601.00	739.23
1800 x 800 TG Rockall - Beauforté	42.1122	1022.00	1257.06
PANELS			
1800 x 560 Front Panel	42.5012	178.00	218.94
800 x 560 End Panel	42.5022	97.00	119.31
1800 x 560 Front Panel - Beauforté	42.6012	285.00	350.55
800 x 560 End Panel - Beauforté	42.6022	174.00	214.02
1800 Adjustable Front Panel - Beauforté	42.6032	404.00	496.92
1810 x 810 L Shape Flat Panel - Beauforté	42.6035	514.00	632.22

SHOWER
440 DEPTH
HEAD REST
ULTRA STRONG

1900 x 900 SE TG Grips Sold Separately

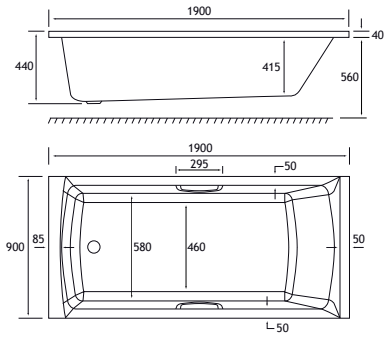

1900 x 900 x 440mm **374 Litres**

DESCRIPTION	CODE	€ EX VAT	€ INC VAT
1900 x 900 TG Rockall - 5mm	42.0121	810.00	996.30
1900 x 900 TG Rockall - Beauforté	42.1121	1322.00	1626.06
PANELS			
1900 x 560 Front Panel	42.5011	229.00	281.67
900 x 560 End Panel	42.5021	97.00	119.31
1900 x 560 Front Panel - Beauforté	42.6011	335.00	412.05
900 x 560 End Panel - Beauforté	42.6021	192.00	236.16

SHOWER
440 DEPTH
HEAD REST
ULTRA STRONG

Rockall Twin Grips

DESCRIPTION	CODE	€ EX VAT	€ INC VAT
Rockall SE Chrome Grips (pair)	42.1201	47.00	57.81
Rockall SE Matt White Grips (pair)	42.1202	65.00	79.95
Rockall SE Matt Grey Grips (pair)	42.1203	65.00	79.95
Rockall SE Matt Black Grips (pair)	42.1204	65.00	79.95
Rockall SE Matt Cappuccino Grips (pair)	42.1205	65.00	79.95
Rockall SE Matt Anthracite Grips (pair)	42.1206	65.00	79.95

See page 122 - 123 for all Twin Grip images & bath accessories.
All grips sold separately.



Malin SINGLE ENDED

Malin is the sea region off the rugged Irish north coast, renowned for its strong sea winds, majestic landscapes, and high tides. The strength and clarity of the Malin bath is suggestive of this region, with its minimalist, clean lines, and gently curved back rest support. Featuring narrow ledges on 3 sides, the ultra-modern design of the Malin offers a larger internal bathing space than a deeper-sided bath of the same dimensions.

The Malin is available in both single-ended and double-ended bath variants and in a wide choice of sizes. The range is offered in both 5mm acrylic and ultra-strong Beauforté, which significantly extends the life of the bath.



PRODUCT FEATURES

- 12 SE models
- Each available in: 5mm Acrylic & Ultra Strong Beauforté
- Supplied without pre-drilled tap holes or waste fittings
- 440mm depth on all Malin SE models
- Modern thin rim for maximised bathing space

Bath Screens
Page 137-145



Malin SE shown.

Adjustable bath panels on page 124 - 125

SINGLE ENDED Malin

1500 x 700 SE

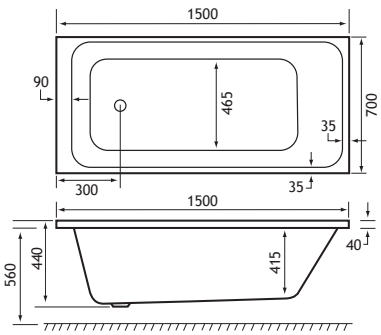

1500 x 700 x 440mm — **212 Litres**

DESCRIPTION	CODE	€ EX VAT	€ INC VAT
1500 x 700 Malin - 5mm	42.0065	430.00	528.90
1500 x 700 Malin - Beauforté	42.1065	779.00	958.17
PANELS			
1500 x 560 Front Panel	42.5017	160.00	196.80
700 x 560 End Panel	42.5024	97.00	119.31
1500 x 560 Front Panel - Beauforté	42.6017	269.00	330.87
700 x 560 End Panel - Beauforté	42.6024	160.00	196.80
1500 Adjustable Front Panel - Beauforté	42.6034	388.00	477.24
1810 x 810 L Shape Flat Panel - Beauforté	42.6035	514.00	632.22

SHOWER
HEAD REST
440 DEPTH
ULTRA STRONG

1600 x 700 SE

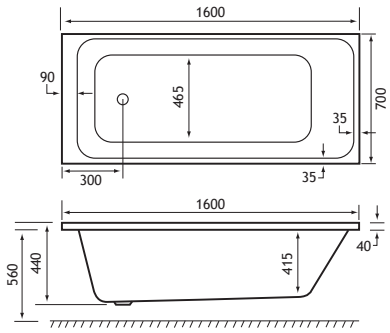

1600 x 700 x 440mm — **230 Litres**

DESCRIPTION	CODE	€ EX VAT	€ INC VAT
1600 x 700 Malin - 5mm	42.0064	430.00	528.90
1600 x 700 Malin - Beauforté	42.1064	779.00	958.17
PANELS			
1600 x 560 Front Panel	42.5016	160.00	196.80
700 x 560 End Panel	42.5024	97.00	119.31
1600 x 560 Front Panel - Beauforté	42.6016	269.00	330.87
700 x 560 End Panel - Beauforté	42.6024	160.00	196.80
1810 x 810 L Shape Flat Panel - Beauforté	42.6035	514.00	632.22

SHOWER
HEAD REST
440 DEPTH
ULTRA STRONG

1700 x 700 SE

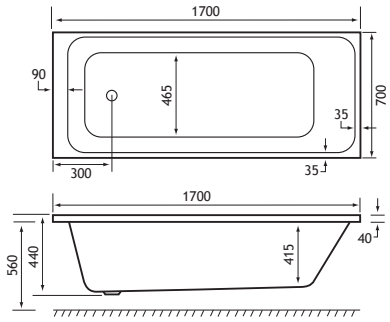

1700 x 700 x 440mm — **238 Litres**

DESCRIPTION	CODE	€ EX VAT	€ INC VAT
1700 x 700 Malin - 5mm	42.0063	430.00	528.90
1700 x 700 Malin - Beauforté	42.1063	779.00	958.17
PANELS			
1700 x 560 Front Panel	42.5013	160.00	196.80
700 x 560 End Panel	42.5024	97.00	119.31
1700 x 560 Front Panel - Beauforté	42.6013	269.00	330.87
700 x 560 End Panel - Beauforté	42.6024	160.00	196.80
1700 Adjustable Front Panel - Beauforté	42.6033	388.00	477.24
1810 x 810 L Shape Flat Panel - Beauforté	42.6035	514.00	632.22

SHOWER
HEAD REST
440 DEPTH
ULTRA STRONG

1700 x 750 SE

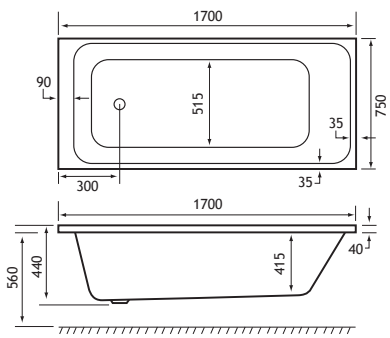

1700 x 750 x 440mm — **270 Litres**

DESCRIPTION	CODE	€ EX VAT	€ INC VAT
1700 x 750 Malin - 5mm	42.0062	523.00	643.29
1700 x 750 Malin - Beauforté	42.1062	913.00	1122.99
PANELS			
1700 x 560 Front Panel	42.5013	160.00	196.80
750x560 End Panel	42.5023	97.00	119.31
1700 x 560 Front Panel - Beauforté	42.6013	269.00	330.87
750 x 560 End Panel - Beauforté	42.6023	160.00	196.80
1700 Adjustable Front Panel - Beauforté	42.6033	388.00	477.24
1810 x 810 L Shape Flat Panel - Beauforté	42.6035	514.00	632.22

SHOWER
HEAD REST
440 DEPTH
ULTRA STRONG

Malin SINGLE ENDED

NEW

1750 x 750 SE

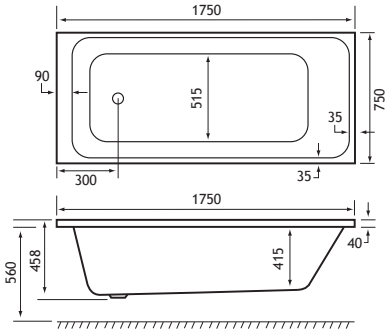

1750 x 750 x 440mm — **274 Litres**

DESCRIPTION	CODE	€ EX VAT	€ INC VAT
1750 x 750 Malin - 5mm	42.0066	682.00	838.86
1750 x 750 Malin - Beauforté	42.1066	1144.00	1226.31
PANELS			
1750 x 560 Front Panel	42.5018	180.00	221.40
750x560 End Panel	42.5023	97.00	119.31
1750 x 560 Front Panel - Beauforté	42.6018	280.00	344.40
750 x 560 End Panel - Beauforté	42.6023	160.00	196.80
1700 Adjustable Front Panel - Beauforté	42.6033	388.00	477.24
1810 x 810 L Shape Flat Panel - Beauforté	42.6035	514.00	632.22

SHOWER
HEAD REST
440 DEPTH
ULTRA STRONG

1800 x 700 SE

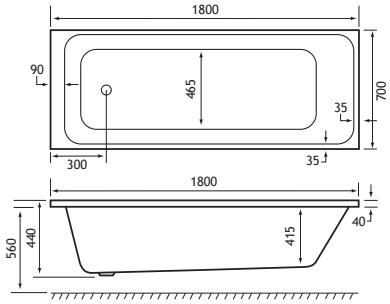

1800 x 700 x 440mm — **267 Litres**

DESCRIPTION	CODE	€ EX VAT	€ INC VAT
1800 x 700 Malin - 5mm	42.0061	581.00	714.63
1800 x 700 Malin - Beauforté	42.1061	997.00	1226.31
PANELS			
1800 x 560 Front Panel	42.5012	178.00	218.94
700 x 560 End Panel	42.5024	97.00	119.31
1800 x 560 Front Panel - Beauforté	42.6012	285.00	350.55
700 x 560 End Panel - Beauforté	42.6024	160.00	196.80
1800 Adjustable Front Panel - Beauforté	42.6032	404.00	496.92
1810 x 810 L Shape Flat Panel - Beauforté	42.6035	514.00	632.22

SHOWER
HEAD REST
440 DEPTH
ULTRA STRONG

Abberton Tap Range NEW

Abberton Bath Filler

Description	Code	€ Ex VAT	€ Inc VAT
Abberton Bath Filler - Chrome	79.1041	194.00	**238.62**
Abberton Bath Filler - Smooth Black	79.1042	205.00	**252.15**
Abberton Bath Filler - Brushed Brass	79.1043	217.00	**266.91**

Abberton Bath Mixer + Kit: Handset, Bracket & Hose

Description	Code	€ Ex VAT	€ Inc VAT
Abberton BSM + Kit - Chrome	79.1037	227.00	**279.21**
Abberton BSM + Kit - Smooth Black	79.1038	247.00	**303.81**
Abberton BSM + Kit - Brushed Brass	79.1039	265.00	**325.95**

Full range, inluding Basin Monos in Taps section.

MP - 0.5 bar minimum

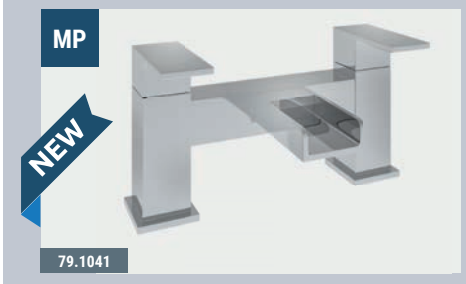





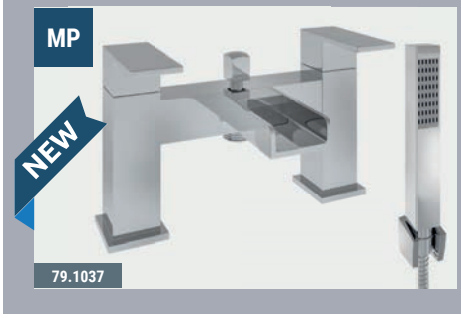





SINGLE ENDED Malin



Complete The Look

Description	Colour	Code	€ Ex VAT	€ Inc VAT
Helston Bath Filler	Chrome	93.0011	247.00	**303.81**
Modern Square Thermostatic Shower Pole	Chrome	60.1001	314.00	**386.22**
Volente 6mm Hinge Bath Screen	Chrome	58.702	303.00	**372.69**

Malin SE shown.

Adjustable bath panels on page 124 - 125

Malin DOUBLE ENDED

Malin is the sea region off the rugged Irish north coast, renowned for its strong sea winds, majestic landscapes, and high tides. The strength and clarity of the Malin bath is suggestive of this region, with its minimalist, clean lines, and gently curved back rest support. Featuring narrow ledges on 3 sides, the ultra-modern design of the Malin offers a larger internal bathing space than a deeper-sided bath of the same dimensions.

The Malin is available in both single-ended and double-ended bath variants and in a wide choice of sizes. The range is offered in both 5mm acrylic and ultra-strong Beauforté, which significantly extends the life of the bath.



PRODUCT FEATURES

- 12 DE models
- Each available in: 5mm Acrylic & Ultra Strong Beauforté
- Supplied without pre-drilled tap holes or waste fittings
- 440mm depth on all Portland SE models
- Modern thin rim for maximised bathing space



Malin DE shown with Helston bath filler 93.0011

Adjustable bath panels on page 124 - 125

DOUBLE ENDED Malin

1600 x 700 DE

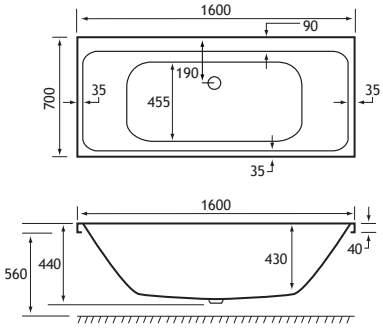

1600 x 700 x 440mm — **210 Litres**

DESCRIPTION	CODE	€ EX VAT	€ INC VAT
1600 x 700 Malin - 5mm	42.0075	451.00	554.73
1600 x 700 Malin - Beauforté	42.1075	808.00	993.84
PANELS			
1600 x 560 Front Panel	42.5016	160.00	196.80
700 x 560 End Panel	42.5024	97.00	119.31
1600 x 560 Front Panel - Beauforté	42.6016	269.00	330.87
700 x 560 End Panel - Beauforté	42.6024	160.00	196.80
1810 x 810 L Shape Flat Panel - Beauforté	42.6035	514.00	632.22

HEAD REST
440 DEPTH
ULTRA STRONG

1650 x 700 DE

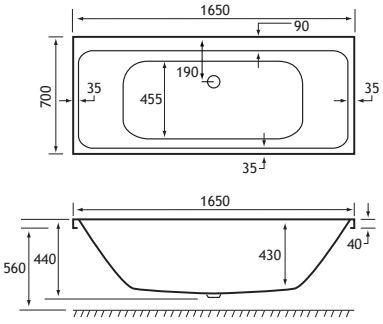

1650 x 700 x 440mm — **219 Litres**

DESCRIPTION	CODE	€ EX VAT	€ INC VAT
1650 x 700 Malin - 5mm	42.0074	451.00	554.73
1650 x 700 Malin - Beauforté	42.1074	808.00	993.84
PANELS			
1650 x 560 Front Panel	42.5015	160.00	196.80
700 x 560 End Panel	42.5024	97.00	119.31
1650 x 560 Front Panel - Beauforté	42.6015	269.00	330.87
700 x 560 End Panel - Beauforté	42.6024	160.00	196.80
1810 x 810 L Shape Flat Panel - Beauforté	42.6035	514.00	632.22

HEAD REST
440 DEPTH
ULTRA STRONG

1700 x 700 DE

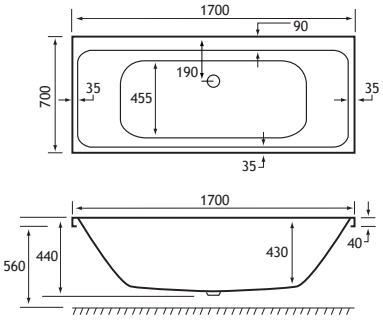

1700 x 700 x 440mm — **227 Litres**

DESCRIPTION	CODE	€ EX VAT	€ INC VAT
1700 x 700 Malin - 5mm	42.0073	451.00	554.73
1700 x 700 Malin - Beauforté	42.1073	808.00	993.84
PANELS			
1700 x 560 Front Panel	42.5013	160.00	196.80
700 x 560 End Panel	42.5024	97.00	119.31
1700 x 560 Front Panel - Beauforté	42.6013	269.00	330.87
700 x 560 End Panel - Beauforté	42.6024	160.00	196.80
1700 Adjustable Front Panel - Beauforté	42.6033	388.00	477.24
1810 x 810 L Shape Flat Panel - Beauforté	42.6035	514.00	632.22

HEAD REST
440 DEPTH
ULTRA STRONG

1700 x 750 DE

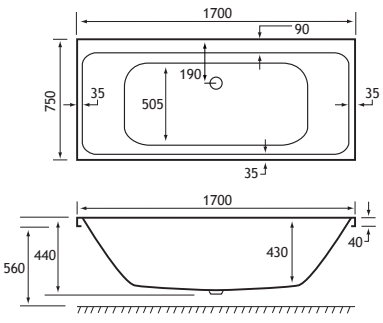

1700 x 750 x 440mm — **248 Litres**

DESCRIPTION	CODE	€ EX VAT	€ INC VAT
1700 x 750 Malin - 5mm	42.0072	546.00	671.58
1700 x 750 Malin - Beauforté	42.1072	945.00	1162.35
PANELS			
1700 x 560 Front Panel	42.5013	160.00	196.80
750x560 End Panel	42.5023	97.00	119.31
1700 x 560 Front Panel - Beauforté	42.6013	269.00	330.87
750 x 560 End Panel - Beauforté	42.6023	160.00	196.80
1700 Adjustable Front Panel - Beauforté	42.6033	388.00	477.24
1810 x 810 L Shape Flat Panel - Beauforté	42.6035	514.00	632.22

HEAD REST
440 DEPTH
ULTRA STRONG

Malin DOUBLE ENDED

NEW

1750 x 750 DE

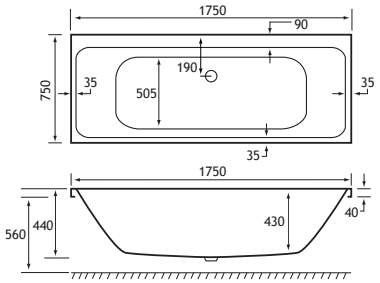

1750 x 750 x 440mm **254 Litres**

DESCRIPTION	CODE	€ EX VAT	€ INC VAT
1750 x 750 Malin - 5mm	42.0076	682.00	838.86
1750 x 750 Malin - Beauforté	42.1076	1144.00	1407.12
PANELS			
1750 x 560 Front Panel	42.5018	180.00	221.40
750x560 End Panel	42.5023	97.00	119.31
1750 x 560 Front Panel - Beauforté	42.6018	280.00	344.40
750 x 560 End Panel - Beauforté	42.6023	160.00	196.80
1700 Adjustable Front Panel - Beauforté	42.6033	388.00	477.24
1810 x 810 L Shape Flat Panel - Beauforté	42.6035	514.00	632.22

HEAD REST

440 DEPTH

ULTRA STRONG

1800 x 700 DE

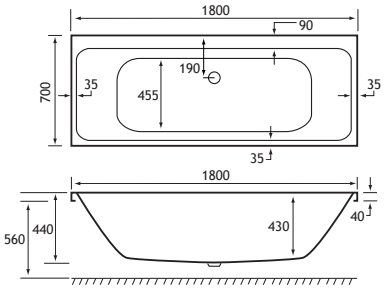

1800 x 700 x 440mm **238 Litres**

DESCRIPTION	CODE	€ EX VAT	€ INC VAT
1800 x 700 Malin - 5mm	42.0071	604.00	742.92
1800 x 700 Malin - Beauforté	42.1071	1029.00	1265.67
PANELS			
1800 x 560 Front Panel	42.5012	178.00	218.94
700 x 560 End Panel	42.5024	97.00	119.31
1800 x 560 Front Panel - Beauforté	42.6012	285.00	350.55
700 x 560 End Panel - Beauforté	42.6024	160.00	196.80
1800 Adjustable Front Panel - Beauforté	42.6032	404.00	496.92
1810 x 810 L Shape Flat Panel - Beauforté	42.6035	514.00	632.22

HEAD REST

440 DEPTH

ULTRA STRONG

Complete The Look

The ultra modern design of the Malin Double Ended Bath allows you to match similar thin edged sleek bathroom products really easily. Create that fresh and contemporary bathroom feel by completing the look.







We suggest the **Gravina** wall hung basin unit. Available in High Gloss White & High Gloss Grey, both with a soft close drawer. Page 254-255

DOUBLE ENDED Malin

Connect Your Colours at Eastbrook


Eastbrook Taps

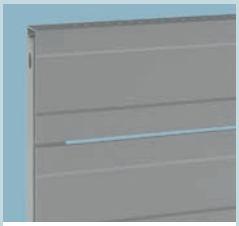
Eastbrook Radiators


Eastbrook Units

Malin DE shown with Helston bath filler 93.0011

Adjustable bath panels on page 124 - 125

Malin D-SHAPE BACK TO WALL

Malin is the sea region off the rugged Irish north coast, renowned for its strong sea winds, majestic landscapes, and high tides. The strength and clarity of the Malin bath is suggestive of this region, with its minimalist, clean lines, and gently curved back rest support. Featuring narrow ledges on 3 sides, the ultra-modern design of the Malin offers a larger internal bathing space than a deeper-sided bath of the same dimensions.

The range is offered in both 5mm acrylic and ultra-strong Beauforté, which significantly extends the life of the bath.



PRODUCT FEATURES

- 2 D-Shape models
- Each available in: 5mm Acrylic & Ultra Strong Beauforté
- Supplied without pre-drilled tap holes or waste fittings
- 440mm depth on all D-Shape BTW models
- Modern thin rim for maximised bathing space



Malin D Shape BTW shown with Helston bath filler 93.0011

D-SHAPE BACK TO WALL Malin

NEW

1700 x 800 BTW

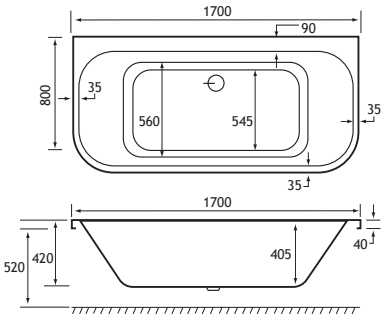

1700 x 800 x 440mm **254 Litres**

DESCRIPTION	CODE	€ EX VAT	€ INC VAT
1700 x 800 Malin D-Shape BTW - 5mm	42.0241	747.00	918.81
1700 x 800 Malin D-Shape BTW - Beauforté	42.1241	1221.00	1501.83
PANELS			
1700 x 800 D-Shape One Piece Front Panel - 5mm	42.5091	369.00	453.87

HEAD REST 440 DEPTH ULTRA STRONG

Headrests

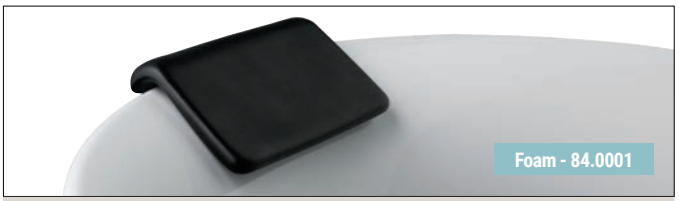

DESCRIPTION	CODE	€ EX VAT	€ INC VAT
Universal Foam Headrest	84.0001	55.00	67.65

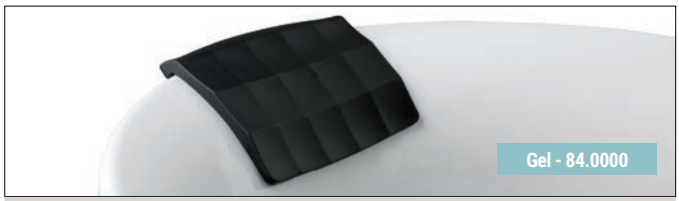

DESCRIPTION	CODE	€ EX VAT	€ INC VAT
Universal PU Gel Headrest	84.0000	107.00	131.61



Shannon L-SHAPE

The robust but comfortable single ended Shannon L-Shape Shower Bath is reminiscent of the Malin region, with its minimalist, clean lines along with a wider space at one end of the bath for showering.

This space efficient bath provides a deceptively large bathing area and is 400mm at its deepest point, ensuring a luxurious, comfortable soak.

The Shannon L-Shape Shower Bath is available in left or right-handed bath variants, and in a choice of 1500 x 850mm and 1700 x 850mm. The range is offered in both 4mm acrylic and ultra-strong Beauforté, which significantly extends the life of the bath.



PRODUCT FEATURES

- 8 models
- Each available in: 4mm Acrylic & Ultra Strong Beauforté
- Supplied without pre-drilled tap holes or waste fittings
- 400mm depth on all Shannon SE models
- Wider space at one end for showering



Shannon L-Shape LH shown. For bath screens see page 137-145

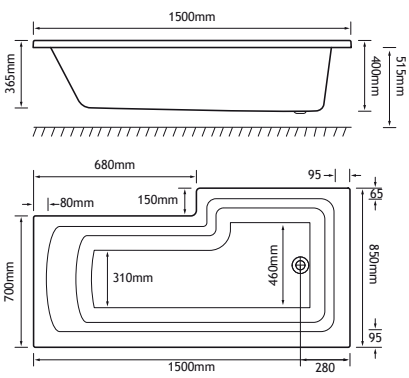

1500 x 850 LH

NEW BEAUFORTÉ PANELS

1500 x 850/700 x 400mm — **194 Litres**

DESCRIPTION	CODE	€ EX VAT	€ INC VAT
1500 x 850 L-Shape LH - 4mm	42.0103	551.00	677.73
1500 x 850 L-Shape LH - Beauforté	42.1103	969.00	1191.87
PANELS			
1500 x 515 L-Shape Front Panel	42.5032	160.00	196.80
1500 x 515 L-Shape Front Panel - Beauforté	42.6045	490.00	602.70
L-Shape Universal End Panel	42.5033	90.00	110.70
L-Shape Universal End Panel - Beauforté	42.6046	173.00	212.79
BATH SCREENS			
Beaufort Screen 1400mm	58.4000	469.00	576.87
Beaufort Screen 1400mm with Towel Rail	69.0141	630.00	774.90

SHOWER

HEAD REST

400 DEPTH

ULTRA STRONG

L-SHAPE Shannon

1500 x 850 RH

NEW BEAUFORTÉ PANELS

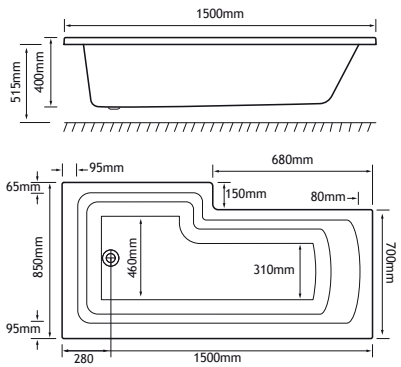

1500 x 850/700 x 400mm — **194 Litres**

DESCRIPTION	CODE	€ EX VAT	€ INC VAT
1500 x 850 L-Shape RH - 4mm	42.0104	551.00	677.73
1500 x 850 L-Shape RH - Beauforté	42.1104	969.00	1191.87
PANELS			
1500 x 515 L-Shape Front Panel	42.5032	160.00	196.80
1500 x 515 L-Shape Front Panel - Beauforté	42.6045	490.00	602.70
L-Shape Universal End Panel	42.5033	90.00	110.70
L-Shape Universal End Panel - Beauforté	42.6046	173.00	212.79
BATH SCREENS			
Beaufort Screen 1400mm	58.4000	469.00	576.87
Beaufort Screen 1400mm with Towel Rail	69.0141	630.00	774.90

SHOWER
HEAD REST
400 DEPTH
ULTRA STRONG

1700 x 850 LH

NEW BEAUFORTÉ PANELS

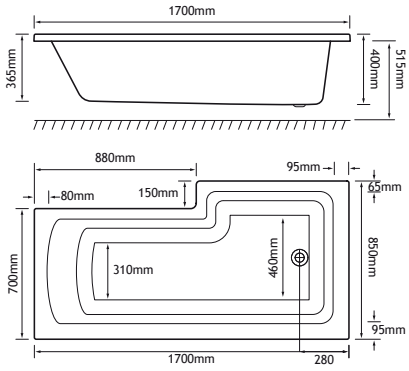

1700 x 850/700 x 400mm — **221 Litres**

DESCRIPTION	CODE	€ EX VAT	€ INC VAT
1700 x 850 L-Shape LH - 4mm	42.0101	551.00	677.73
1700 x 850 L-Shape LH - Beauforté	42.1101	969.00	1191.87
PANELS			
1700 x 515 L-Shape Front Panel	42.5031	160.00	196.80
1700 x 515 L-Shape Front Panel - Beauforté	42.6044	490.00	602.70
L-Shape Universal End Panel	42.5033	90.00	110.70
L-Shape Universal End Panel - Beauforté	42.6046	173.00	212.79
BATH SCREENS			
Beaufort Screen 1400mm	58.4000	469.00	576.87
Beaufort Screen 1400mm with Towel Rail	69.0141	630.00	774.90

SHOWER
HEAD REST
400 DEPTH
ULTRA STRONG

1700 x 850 RH

NEW BEAUFORTÉ PANELS

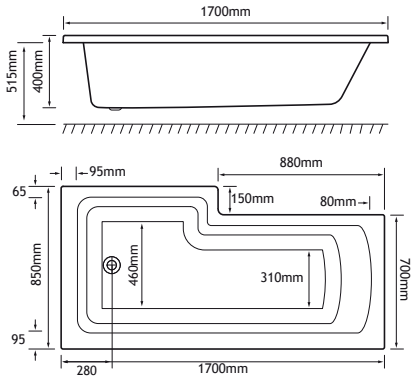

1700 x 850/700 x 400mm — **221 Litres**

DESCRIPTION	CODE	€ EX VAT	€ INC VAT
1700 x 850 L-Shape RH - 4mm	42.0102	551.00	677.73
1700 x 850 L-Shape RH - Beauforté	42.1102	969.00	1191.87
PANELS			
1700 x 515 L-Shape Front Panel	42.5031	160.00	196.80
1700 x 515 L-Shape Front Panel - Beauforté	42.6044	490.00	602.70
L-Shape Universal End Panel	42.5033	90.00	110.70
L-Shape Universal End Panel - Beauforté	42.6046	173.00	212.79
BATH SCREENS			
Beaufort Screen 1400mm	58.4000	469.00	576.87
Beaufort Screen 1400mm with Towel Rail	69.0141	630.00	774.90

SHOWER
HEAD REST
400 DEPTH
ULTRA STRONG

Universal Fittings

ALL 5mm & Beauforté baths come complete with Universal Fittings such as legs, feet & wall brackets etc. Organised ready for your bath installer to fit with ease.



Shannon P-SHAPE

The robust but comfortable single ended Shannon P-Shape Shower Bath is reminiscent of the Biscay region, it has a wider curved space at one end of the bath for showering.

This space efficient bath provides a deceptively large bathing area and is 400mm at its deepest point, ensuring a luxurious, comfortable soak.

The Shannon P-Shape Shower Bath is available in left or right-handed bath variants, and in a choice of 1500 x 850mm and 1700 x 850mm. The range is offered in both 4mm acrylic and ultra-strong Beauforté, which significantly extends the life of the bath.



PRODUCT FEATURES

- 8 models
- Each available in: 4mm Acrylic & Ultra Strong Beauforté
- Supplied without pre-drilled tap holes or waste fittings
- 400mm depth on all Shannon SE models
- Wider curved space at one end for showering



Shannon P-Shape Left Hand (LH) shown. For bath screens see page 137-145

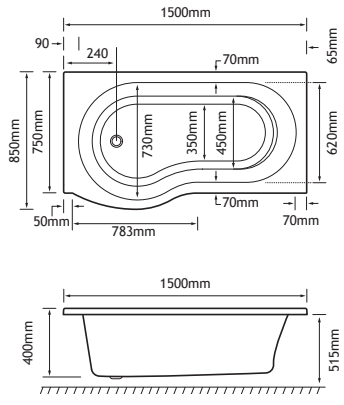

1500 x 850 LH

NEW BEAUFORTÉ PANELS

1500 x 850/750 x 400mm **179 Litres**

DESCRIPTION	CODE	€ EX VAT	€ INC VAT
1500 x 850 P-Shape LH - 4mm	42.0107	551.00	677.73
1500 x 850 P-Shape LH - Beauforté	42.1107	969.00	1191.87
PANELS			
1500 x 515 P-Shape Front Panel	42.5042	160.00	196.80
1500 x 515 P-Shape Front Panel - Beauforté	42.6042	481.00	591.63
P-Shape Universal End Panel	42.5043	90.00	110.70
P-Shape Universal End Panel - Beauforté	42.6043	173.00	212.79
BATH SCREENS			
C Shape Screen 6mm easy clean	69.0140	321.00	394.83
C Shape Screen 6mm easy clean with towel rail	69.0143	579.00	712.17

SHOWER

HEAD REST

400 DEPTH

ULTRA STRONG

P-SHAPE Shannon

1500 x 850 RH

NEW BEAUFORTÉ PANELS

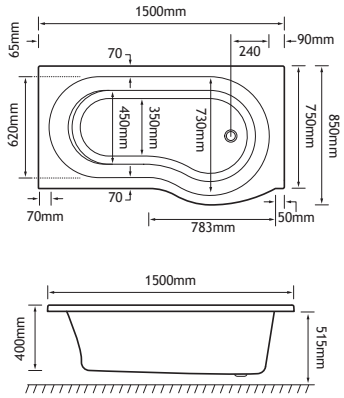

1500 x 850/750 x 400mm — **179 Litres**

DESCRIPTION	CODE	€ EX VAT	€ INC VAT
1500 x 850 P-Shape RH - 4mm	42.0108	551.00	677.73
1500 x 850 P-Shape RH - Beauforté	42.1108	969.00	1191.87
PANELS			
1500 x 515 P-Shape Front Panel	42.5042	160.00	196.80
1500 x 515 P-Shape Front Panel - Beauforté	42.6042	481.00	591.63
P-Shape Universal End Panel	42.5043	90.00	110.70
P-Shape Universal End Panel - Beauforté	42.6043	173.00	212.79
BATH SCREENS			
C Shape Screen 6mm easy clean	69.0140	321.00	394.83
C Shape Screen 6mm easy clean with towel rail	69.0143	579.00	712.17

SHOWER
HEAD REST
400 DEPTH
ULTRA STRONG

1700 x 850 LH

NEW BEAUFORTÉ PANELS

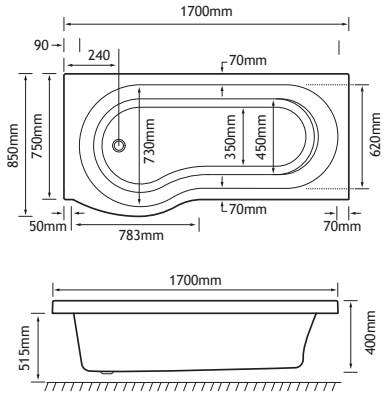

1700 x 850/750 x 400mm — **220 Litres**

DESCRIPTION	CODE	€ EX VAT	€ INC VAT
1700 x 850 P-Shape LH - 4mm	42.0105	551.00	677.73
1700 x 850 P-Shape LH - Beauforté	42.1105	969.00	1191.87
PANELS			
1700 x 515 P-Shape Front Panel	42.5041	160.00	196.80
1700 x 515 P-Shape Front Panel - Beauforté	42.6041	481.00	591.63
P-Shape Universal End Panel	42.5043	90.00	110.70
P-Shape Universal End Panel - Beauforté	42.6043	173.00	212.79
BATH SCREENS			
C Shape Screen 6mm easy clean	69.0140	321.00	394.83
C Shape Screen 6mm easy clean with towel rail	69.0143	579.00	712.17

SHOWER
HEAD REST
400 DEPTH
ULTRA STRONG

1700 x 850 RH

NEW BEAUFORTÉ PANELS

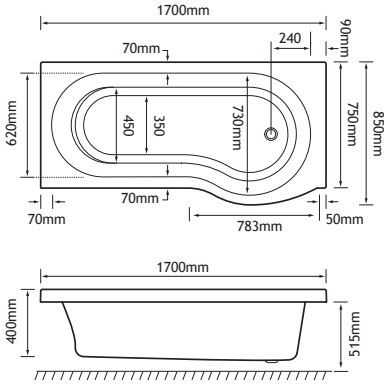

1700 x 850/750 x 400mm — **220 Litres**

DESCRIPTION	CODE	€ EX VAT	€ INC VAT
1700 x 850 P-Shape RH - 4mm	42.0106	551.00	677.73
1700 x 850 P-Shape RH - Beauforté	42.1106	969.00	1191.87
PANELS			
1700 x 515 P-Shape Front Panel	42.5041	160.00	196.80
1700 x 515 P-Shape Front Panel - Beauforté	42.6041	481.00	591.63
P-Shape Universal End Panel	42.5043	90.00	110.70
P-Shape Universal End Panel - Beauforté	42.6043	173.00	212.79
BATH SCREENS			
C Shape Screen 6mm easy clean	69.0140	321.00	394.83
C Shape Screen 6mm easy clean with towel rail	69.0143	579.00	712.17

SHOWER
HEAD REST
400 DEPTH
ULTRA STRONG

Universal Fittings

ALL 5mm & Beauforté baths come complete with Universal Fittings such as legs, feet & wall brackets etc. Organised ready for your bath installer to fit with ease.



Lundy OFFSET CORNER

Located off the Southwestern coast of England, the Lundy Sea region includes some of Great Britain's finest Coastlines. Stretching from the shores of Cornwall, Devon, and Somerset; to the westerly tip of Wales. Designed for luxury bathing within a limited space, the Lundy can be installed in the corner of your bathroom so you can relax in luxurious comfort in a smaller bathroom space.
Within the bath is an integrated seating area that provides more options to use this bath to the full. This space efficient bath provides a large bathing area and is 420mm at its deepest point, ensuring a deep, comfortable soak.

Available in left & right-handed variants of 1500x1040. The Lundy is offered in both 5mm acrylic & ultra-strong Beauforté, which significantly extends the life of the bath.



PRODUCT FEATURES

- 4 Offset Corner models
- Each available in: 5mm Acrylic & Ultra Strong Beauforté
- Supplied without pre-drilled tap holes or waste fittings.
- 420mm depth on all Offset Corner models



Lundy Offset Corner LH 42.0221

OFFSET CORNER Lundy

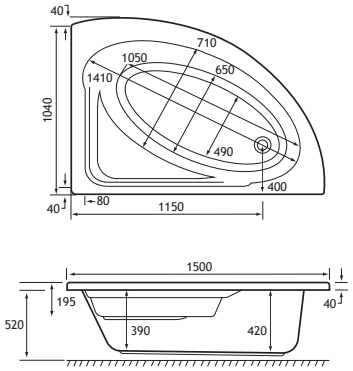

1500 x 1040 LH NEW

1500 x 1040 x 420mm **216 Litres**

DESCRIPTION	CODE	€ EX VAT	€ INC VAT
1500 x 1040 Lundy Offset Corner LH - 5mm	42.0221	747.00	918.81
1500 x 1040 Lundy Offset Corner LH - Beauforté	42.1221	1210.00	1488.30
PANELS			
Lundy Offset Corner Bath Panel - 5mm	42.5081	173.00	212.79
Lundy Offset Corner Bath Panel - Beauforté	42.6081	481.00	591.63

HEAD REST · 420 DEPTH · ULTRA STRONG · SHOWER

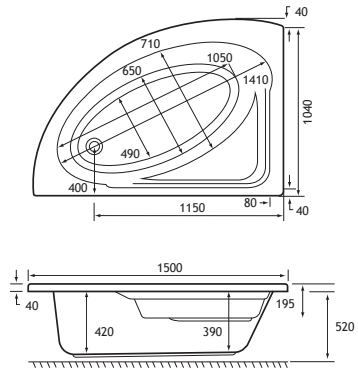

1500 x 1040 RH NEW

1500 x 1040 x 420mm **216 Litres**

DESCRIPTION	CODE	€ EX VAT	€ INC VAT
1500 x 1040 Lundy Offset Corner RH - 5mm	42.0222	747.00	918.81
1500 x 1040 Lundy Offset Corner RH - Beauforté	42.1222	1210.00	1488.30
PANELS			
Lundy Offset Corner Bath Panel - 5mm	42.5081	173.00	212.79
Lundy Offset Corner Bath Panel - Beauforté	42.6081	481.00	591.63

HEAD REST · 420 DEPTH · ULTRA STRONG · SHOWER

Headrests

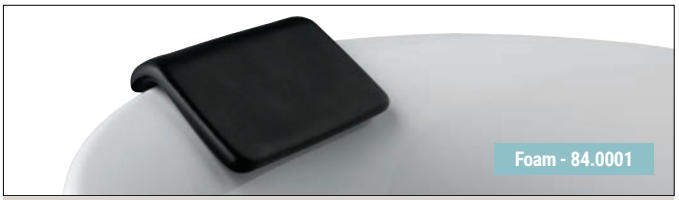

DESCRIPTION	CODE	€ EX VAT	€ INC VAT
Universal Foam Headrest	84.0001	55.00	67.65

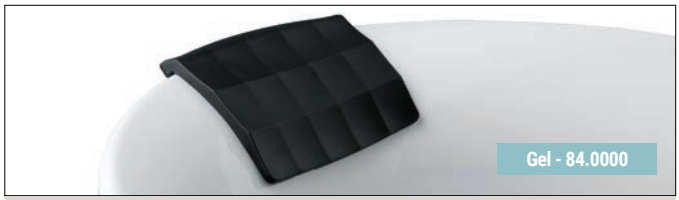

DESCRIPTION	CODE	€ EX VAT	€ INC VAT
Universal PU Gel Headrest	84.0000	107.00	131.61



Lundy Offset Corner RH 42.1222

Wandsworth FREESTANDING



PRODUCT FEATURES

- 2 models
- 2 colours:
  Gloss White & Gloss Grey
- Double skinned 4mm acrylic
- Supplied with white waste fittings & slimline slotted overflow
- 580mm depth on all Wandsworth Freestanding baths
- 5 year warranty





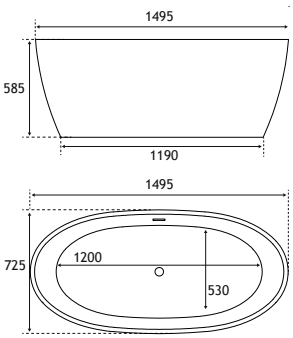

1495 x 725 FS

1495 x 725 x 580mm **243 Litres**

DESCRIPTION	CODE	€ EX VAT	€ INC VAT
1495 x 725 Wandsworth Freestanding Bath - Gloss White	33.0003	1297.00	1595.31
1495 x 725 Wandsworth Freestanding Bath - Gloss Grey & White	33.0004	1322.00	1626.06

About: Model comes with bath waste & overflow.

580 DEPTH HEAD REST BEAUFORT

FREESTANDING Lambeth



PRODUCT FEATURES

- 2 models
- 2 colours:
  Gloss White & Gloss Grey
- Double skinned 4mm acrylic
- Supplied with white waste fittings & slimline slotted overflow
- 560mm depth on all Lambeth Freestanding baths
- 5 year warranty





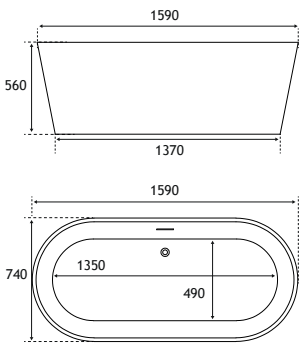

1590 x 740 FS

1590 x 740 x 560mm **255 Litres**

DESCRIPTION	CODE	€ EX VAT	€ INC VAT
1590 x 740 Lambeth Freestanding Bath - Gloss White	33.0005	1339.00	1646.97
1590 x 740 Lambeth Freestanding Bath - Gloss Grey & White	33.0006	1364.00	1677.72

About: Model comes with bath waste & overflow.

560 DEPTH HEAD REST BEAUFORT

Charlton FREESTANDING



PRODUCT FEATURES

- 2 models
- 2 colours:
  Gloss White & Gloss Grey
- Double skinned 4mm acrylic
- Supplied with white waste fittings & slimline slotted overflow
- 565mm depth on all Charlton Freestanding baths
- 5 year warranty





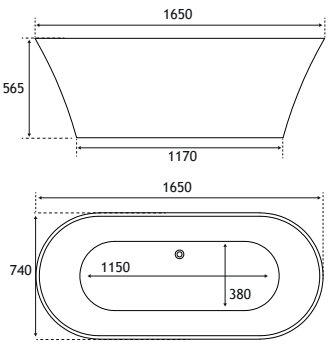

1650 x 740 FS

1650 x 740 x 565mm **205 Litres**

DESCRIPTION	CODE	€ EX VAT	€ INC VAT
1650 x 740 Charlton Freestanding Bath - Gloss White	33.0007	1332.00	1638.36
1650 x 740 Charlton Freestanding Bath - Gloss Grey & White	33.0008	1356.00	1667.88

About: Model comes with bath waste & overflow.

565 DEPTH HEAD REST BEAUFORT

FREESTANDING Margravine



PRODUCT FEATURES

- 2 models
- 2 colours:
  Gloss White & Gloss Grey
- Double skinned 4mm acrylic
- Supplied with white waste fittings & overflow. Tap holes require drilling.
- 570 mm depth on all Margravine Freestanding baths
- 5 year warranty





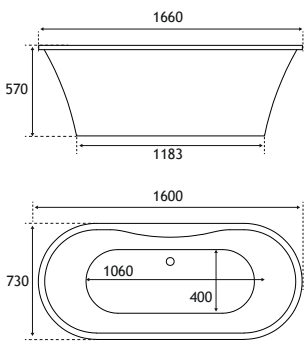

1660 x 730 FS

1660 x 730 x 570mm **195 Litres**

DESCRIPTION	CODE	€ EX VAT	€ INC VAT
1660 x 730 Margravine Freestanding Bath - Gloss White	33.0001	1308.00	1608.84
1660 x 730 Margravine Freestanding Bath - Gloss Grey & White	33.0002	1335.00	1642.05

About: Model comes with bath waste & overflow.

570 DEPTH HEAD REST BEAUFORT

Chislehurst FREESTANDING



PRODUCT FEATURES

- 1 model
- Gloss White
- Double skinned 4mm acrylic
- Supplied with white waste fittings & slimline slotted overflow
- 580mm depth on all Chislehurst Freestanding baths
- 5 year warranty





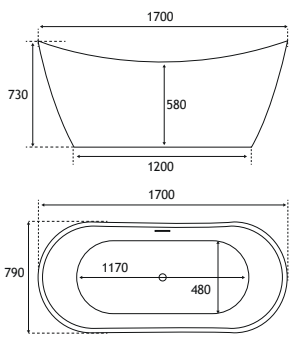

1700 x 790 FS

1700 x 790 x 730mm **260 Litres**

DESCRIPTION	CODE	€ EX VAT	€ INC VAT
1700 x 790 Chislehurst Freestanding Bath - Gloss White	33.0009	1553.00	1910.19

About: Model comes with bath waste & overflow.

580 DEPTH HEAD REST BEAUFORT

FREESTANDING Wickham

PRODUCT FEATURES

- 2 models
- Gloss White
- Double skinned 4mm acrylic
- Supplied with white waste fittings & slimline slotted overflow
- 740mm depth on all Wickham Freestanding baths
- 5 year warranty



NEW





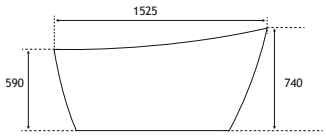

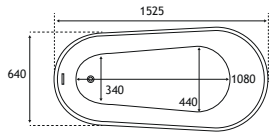

1525 x 640 FS

1525 x 640 x 590mm **202 Litres**

DESCRIPTION	CODE	€ EX VAT	€ INC VAT
1525 x 640 Wickham Freestanding Bath - Gloss White	33.0011	1384.00	1702.32

About: Model comes with bath waste & overflow.

590 DEPTH HEAD REST BEAUFORT

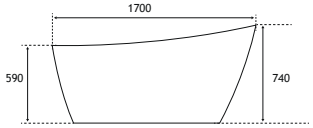

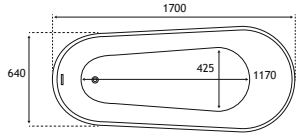

1700 x 640 FS

1700 x 640 x 590mm **230 Litres**

DESCRIPTION	CODE	€ EX VAT	€ INC VAT
1700 x 640 Wickham Freestanding Bath - Gloss White	33.0010	1426.00	1753.98

About: Model comes with bath waste & overflow.

590 DEPTH HEAD REST BEAUFORT

Humber FREESTANDING

The Humber is the largest coastal plain estuary on the east coast of Britain and drains a catchment area of 20% of the total land surface of England. Classified as a macro-tidal estuary because of the large tidal ranges, at its widest point the Humber Estuary is 14km across.

Named after this significant geographical area, the Humber bath offers a wonderful bathing area, giving comfort and space for all. Available as a double ended freestanding bath, the engineered white skirted option has straight sides yet a natural incline at each end to give maximum relaxation to all bathers.The Humber is available in two sizes 1800x800 and 1700x755.



PRODUCT FEATURES

- 2 models
- Available in:
  4mm Acrylic Beaufort
- Supplied without
  pre-drilled tap holes or
  waste fittings
- 410mm depth on all Humber
  Freestanding baths
- 25 years warranty
- Waste and overflow items
  Sold Separately



FREESTANDING Humber

1700 x 755 FS

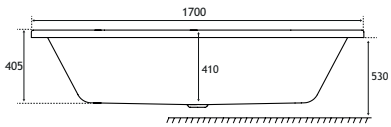

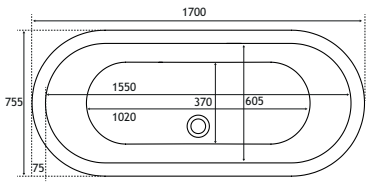

1700 x 755 x 410mm **195 Litres**

DESCRIPTION	CODE	€ EX VAT	€ INC VAT
1700 x 755 Humber - 4mm	42.0162	1337.00	1644.51

About: Model comes complete with removeable side panel. Waste & overflow not included.

410 DEPTH HEAD REST 4MM BEAUFORT

1800 x 800 FS

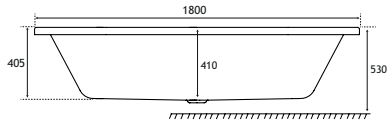

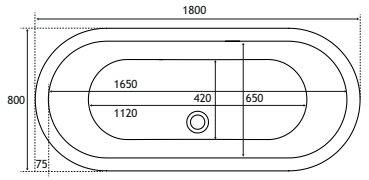

1800 x 800 x 410mm **231 Litres**

DESCRIPTION	CODE	€ EX VAT	€ INC VAT
1800 x 800 Humber - 4mm	42.0161	1392.00	1712.16

About: Model comes complete with removeable side panel. Waste & overflow not included.

410 DEPTH HEAD REST 4MM BEAUFORT



Frestanding Humber shown with floor standing manual mono BSM 93.0112

Beaufort BATHS

Whirlpool Baths

A Whirlpool system transforms your Beaufort bath into a truly relaxing space to escape reality and unwind from the comfort of your own home.

At Eastbrook Bathrooms we offer a **6 Jet Whirlpool Bath & Aquair System** for specific baths in the Beaufort range. The jets feed water into the bath at pressure to offer an invigorating spa like bathing experience.



About Aquair:
Aquair are a family-owned business that uses koller systems in assembling their wellness systems. Koller has specialised in water and whirlpool systems for almost 45 years. It was one of the first enterprises in the world to apply Whirlpool technology in bathtubs.

Pump Information:
The pumps used on the Eastbrook Whirlpool Bath System have a line voltage of 220-240V 60Hz, input of 0.85 HP 0.65KW, output of 0.45KW and a flow rate of 210 litres per minute. **2 Year Warranty on all systems.**

RIGOROUSLY TESTED FOR DAILY USAGE

System Benefits:
- Powerful, reliable and silent pumps
- Anchored securely on the adjustable legs
- Compact dimensions allow for space saving installation
- Robust and durable in design

Safety & Testing:
Eastbrook whirlpool baths are one of the only whirlpool systems in the UK that have an electrical safety testing certification that complies to British standards and tests. Each system is tested for Electro Magnetic Frequency and Electro Magnetic Compatibility to ensure it complies with certification standards. **Tested and certified to EN 12764:2004+A1:2008**

High Quality Components

The whirlpool bath components are produced by specialists in whirlpool design and technology. They are fitted with flexible pipe work, which is smooth and doesn't retain water but strong enough to withstand any sagging.

Quality Assured

Each whirlpool bath is factory tested and approved and for absolute peace of mind we test each one under normal working conditions for 30 minutes and then a 30 minute standing period.

All our whirlpool systems include 'child safety suction' and are tested to BS EN 12764:2004+A1:2008.

GALE FORCE STRENGTH

Beaufort

STORM PROOF STANDARDS

Whirlpools



Hand Finished With Care

We have a dedicated factory with passionate personnel to fit our systems. Staff are trained at the facilities to master specific processes and have their own service van fleet to give our customers pieces of mind.



Factory Installed & Tested

Each whirlpool bath is built in-house to manage volumes and achieve the best quality possible. Independent water stations have been installed to guarantee customer a one hour testing period before purchase.







Bespoke Whirlpools

Pages: 120 & 121

For those want to create their own unique bathing experience that's perfect for your body. Your bespoke creation will be hand-built using high quality materials, by our teams of skilled technicians.

Whirlpool 6/8/14 Jet

Jets feed water into the bath as pressure, creating a range of massages. From gentle relaxation to sports hydro-massage.



WHIRLPOOL SYSTEM P120

Airspa 12 Jet

Air bubbles are released into the water producing a gentle, calming massaging fizz.



AIRSPA SYSTEMS P121

Combination 6/14 Jet

The best of both systems, which can be used in unison or independently to aid relaxation.
A 12 Jet Airspa available with either a 6 or 14 Jet Whirlpool.



COMBINATION SYSTEMS P121

Stocked Whirlpools

Warranty On All Systems — 2 YEARS

PORTLAND Single Ended, 6 Jet Whirlpool



1700 x 750 SE **6 Jet**

1700 x 750 x 440mm **248 Litres**

DESCRIPTION	CODE	€ EX VAT	€ INC VAT
1700 x 750 Portland SE 6 Jet Whirlpool - Beauforté	42.2003	2179.00	2680.17
PANELS			
1700 x 560 Front Panel	42.5013	160.00	196.80
750 x 560 End Panel	42.5023	97.00	119.31
1700 x 560 Front Panel - Beauforté	42.6013	269.00	330.87
750 x 560 End Panel - Beauforté	42.6023	160.00	196.80
1810 x 810 L Shape Flat Panel - Beauforté	42.6035	514.00	632.22
1700 Adjustable Front Panel - Beauforté	42.6033	388.00	477.24

WHIRLPOOL
HEAD REST
440 DEPTH
ULTRA STRONG

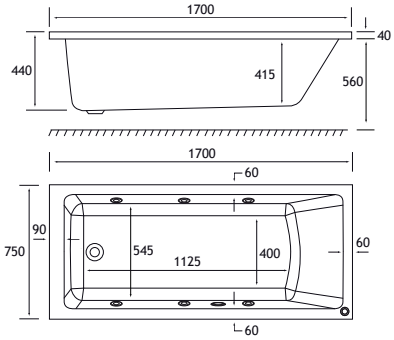



PORTLAND Single Ended, 14 Jet Whirlpool



1700 x 750 SE **14 Jet**

1700 x 750 x 440mm **248 Litres**

DESCRIPTION	CODE	€ EX VAT	€ INC VAT
1700 x 750 Portland SE 14 Jet Whirlpool - Beauforté	42.2017	2753.00	3386.19
PANELS			
1700 x 560 Front Panel	42.5013	160.00	196.80
750 x 560 End Panel	42.5023	97.00	119.31
1700 x 560 Front Panel - Beauforté	42.6013	269.00	330.87
750 x 560 End Panel - Beauforté	42.6023	160.00	196.80
1810 x 810 L Shape Flat Panel - Beauforté	42.6035	514.00	632.22
1700 Adjustable Front Panel - Beauforté	42.6033	388.00	477.24

WHIRLPOOL
HEAD REST
440 DEPTH
ULTRA STRONG

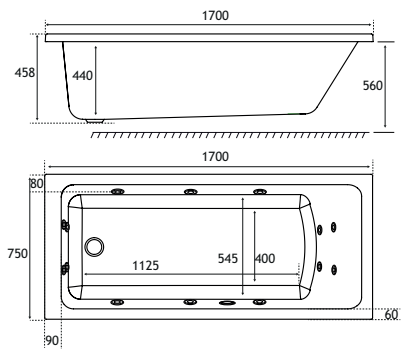



2 YEARS **Warranty On All Systems**

Stocked Whirlpools

PORTLAND Double Ended, 6 Jet Whirlpool



1700 x 750 DE **6 Jet**

1700 x 750 x 440mm **231 Litres**

DESCRIPTION	CODE	€ EX VAT	€ INC VAT
1700 x 750 Portland DE 6 Jet Whirlpool - Beauforté	42.2004	2210.00	2718.30
PANELS			
1700 x 560 Front Panel	42.5013	160.00	196.80
750 x 560 End Panel	42.5023	97.00	119.31
1700 x 560 Front Panel - Beauforté	42.6013	269.00	330.87
750 x 560 End Panel - Beauforté	42.6023	160.00	196.80
1810 x 810 L Shape Flat Panel - Beauforté	42.6035	514.00	632.22
1700 Adjustable Front Panel - Beauforté	42.6033	388.00	477.24

WHIRLPOOL
HEAD REST
440 DEPTH
ULTRA STRONG

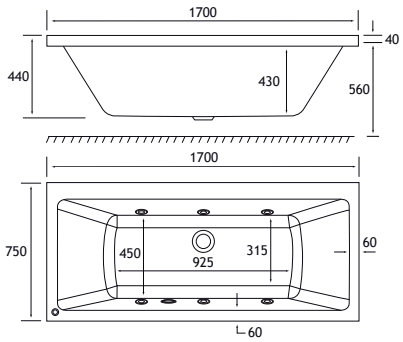



PORTLAND Double Ended, 14 Jet Whirlpool



1700 x 750 DE **14 Jet**

1700 x 750 x 440mm **231 Litres**

DESCRIPTION	CODE	€ EX VAT	€ INC VAT
1700 x 750 Portland DE 14 Jet Whirlpool - Beauforté	42.2016	2786.00	3426.78
PANELS			
1700 x 560 Front Panel	42.5013	160.00	196.80
750 x 560 End Panel	42.5023	97.00	119.31
1700 x 560 Front Panel - Beauforté	42.6013	269.00	330.87
750 x 560 End Panel - Beauforté	42.6023	160.00	196.80
1810 x 810 L Shape Flat Panel - Beauforté	42.6035	514.00	632.22
1700 Adjustable Front Panel - Beauforté	42.6033	388.00	477.24

WHIRLPOOL
HEAD REST
440 DEPTH
ULTRA STRONG

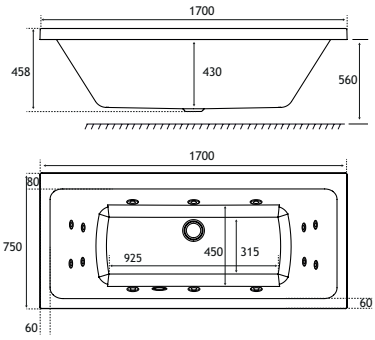



Stocked Whirlpools

Warranty On All Systems — 2 YEARS

BISCAY Double Ended, 6 Jet Whirlpool



1700 x 800 DE 6 Jet

1700 x 800 x 440mm — **219 Litres**

DESCRIPTION	CODE	€ EX VAT	€ INC VAT
1700 x 800 DE LH Biscay 6 Jet Whirlpool - Beauforté	42.2001	2203.00	2709.69
1700 x 800 DE RH Biscay 6 Jet Whirlpool - Beauforté	42.2002	2203.00	2709.69
PANELS			
Biscay Panel 1700 x 800	42.5001	317.00	389.91

WHIRLPOOL
HEAD REST
440 DEPTH
ULTRA STRONG

Left Hand Biscay

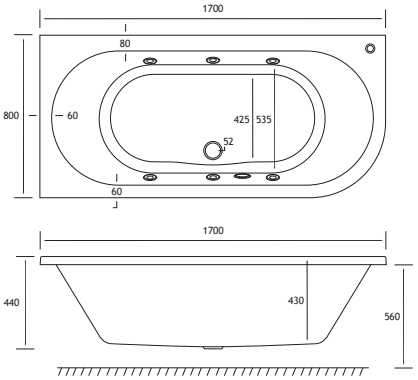

Right Hand Biscay

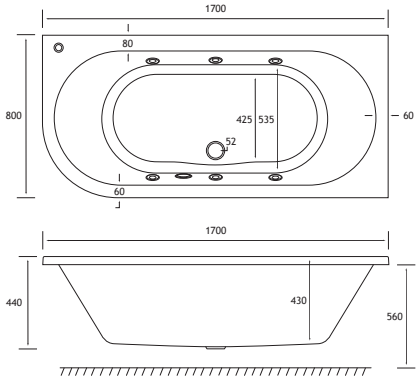

BISCAY Double Ended, 14 Jet Whirlpool



1700 x 800 DE 14 Jet

1700 x 800 x 440mm — **219 Litres**

DESCRIPTION	CODE	€ EX VAT	€ INC VAT
1700 x 800 DE LH Biscay 14 jet Whirlpool - Beauforté	42.2014	2751.00	3383.73
1700 x 800 DE RH Biscay 14 jet Whirlpool - Beauforté	42.2015	2751.00	3383.73
PANELS			
Biscay Panel 1700 x 800	42.5001	317.00	389.91

WHIRLPOOL
HEAD REST
440 DEPTH
ULTRA STRONG

Left Hand Biscay

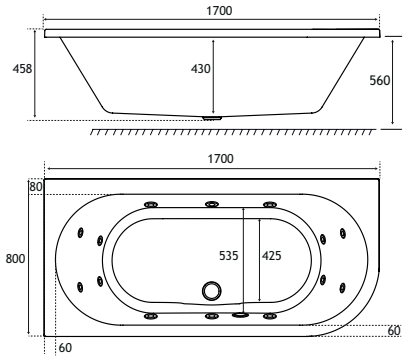

Right Hand Biscay

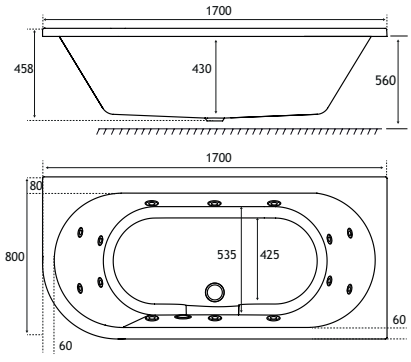

2 YEARS **Warranty On All Systems**

Stocked Whirlpools

ROCKALL Single Ended, 6 Jet Whirlpool



1700 x 700 SE **6 Jet**

1700 x 700 x 440mm **238 Litres**

DESCRIPTION	CODE	€ EX VAT	€ INC VAT
1700 x 700 Rockall SE 6 Jet Whirlpool - Beauforté	42.2005	2042.00	2511.66
PANELS			
1700 x 560 Front Panel	42.5013	160.00	196.80
700 x 560 End Panel	42.5024	97.00	119.31
1700 x 560 Front Panel - Beauforté	42.6013	269.00	330.87
700 x 560 End Panel - Beauforté	42.6024	160.00	196.80
1810 x 810 L Shape Flat Panel - Beauforté	42.6035	514.00	632.22
1700 Adjustable Front Panel - Beauforté	42.6033	388.00	477.24

WHIRLPOOL
HEAD REST
440 DEPTH
ULTRA STRONG

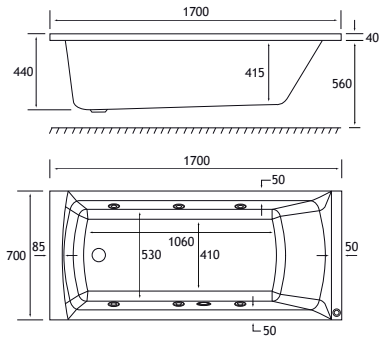



ROCKALL Single Ended, 14 Jet Whirlpool



1700 x 700 SE **14 Jet**

1700 x 700 x 440mm **238 Litres**

DESCRIPTION	CODE	€ EX VAT	€ INC VAT
1700 x 700 Rockall 14 Jet Whirlpool - Beauforté	42.2013	2610.00	3210.30
PANELS			
1700 x 560 Front Panel - 5mm	42.5013	160.00	196.80
700 x 560 End Panel - 5mm	42.5024	97.00	119.31
1700 x 560 Front Panel - Beauforté	42.6013	269.00	330.87
700 x 560 End Panel - Beauforté	42.6024	160.00	196.80
1810 x 810 L Shape Flat Panel - Beauforté	42.6035	514.00	632.22
1700 Adjustable Front Panel - Beauforté	42.6033	388.00	477.24

WHIRLPOOL
HEAD REST
440 DEPTH
ULTRA STRONG

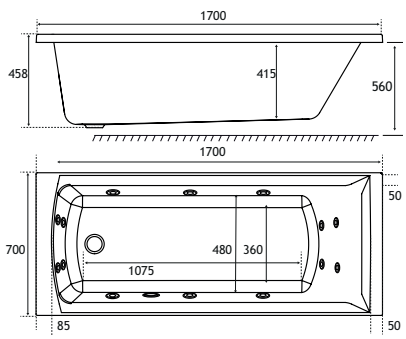



Stocked Whirlpools

Warranty On All Systems — 2 YEARS

ROCKALL Single Ended, 6 Jet Whirlpool



1700 x 750 SE **6 Jet**

1700 x 750 x 440mm **258 Litres**

DESCRIPTION	CODE	€ EX VAT	€ INC VAT
1700 x 750 Rockall SE 6 Jet Whirlpool - Beauforté	42.2006	2175.00	2675.25
PANELS			
1700 x 560 Front Panel	42.5013	160.00	196.80
750 x 560 End Panel	42.5023	97.00	119.31
1700 x 560 Front Panel - Beauforté	42.6013	269.00	330.87
750 x 560 End Panel - Beauforté	42.6023	160.00	196.80
1810 x 810 L Shape Flat Panel - Beauforté	42.6035	514.00	632.22
1700 Adjustable Front Panel - Beauforté	42.6033	388.00	477.24

WHIRLPOOL
HEAD REST
440 DEPTH
ULTRA STRONG

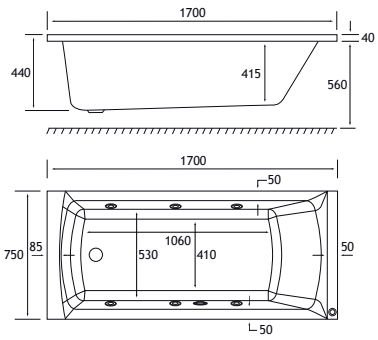



ROCKALL Single Ended, 14 Jet Whirlpool



1700 x 750 SE **14 Jet**

1700 x 750 x 440mm **268 Litres**

DESCRIPTION	CODE	€ EX VAT	€ INC VAT
1700 x 750 Rockall 14 Jet Whirlpool - Beauforté	42.2012	2753.00	3386.19
PANELS			
1700 x 560 Front Panel - 5mm	42.5013	160.00	196.80
750 x 560 End Panel - 5mm	42.5023	97.00	119.31
1700 x 560 Front Panel - Beauforté	42.6013	269.00	330.87
750 x 560 End Panel - Beauforté	42.6023	160.00	196.80
1810 x 810 L Shape Flat Panel - Beauforté	42.6035	514.00	632.22
1700 Adjustable Front Panel - Beauforté	42.6033	388.00	477.24

WHIRLPOOL
HEAD REST
440 DEPTH
ULTRA STRONG

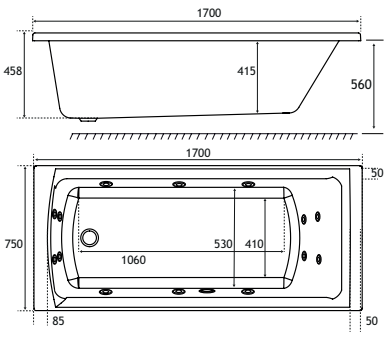



2 YEARS **Warranty On All Systems**

Stocked Whirlpools

ROCKALL Single Ended, 6 Jet Whirlpool



1800 x 800 SE **6 Jet**

1800 x 800 x 440mm **284 Litres**

DESCRIPTION	CODE	€ EX VAT	€ INC VAT
1800 x 800 Portland SE 6 Jet Whirlpool - Beauforté	42.2007	2315.00	2847.45
PANELS			
1800 x 560 Front Panel	42.5012	178.00	218.94
800 x 560 End Panel	42.5022	97.00	119.31
1800 x 560 Front Panel - Beauforté	42.6012	285.00	350.55
800 x 560 End Panel - Beauforté	42.6022	174.00	214.02
1810 x 810 L Shape Flat Panel - Beauforté	42.6035	514.00	632.22
1800 Adjustable Front Panel - Beauforté	42.6032	404.00	496.92

WHIRLPOOL
HEAD REST
440 DEPTH
ULTRA STRONG

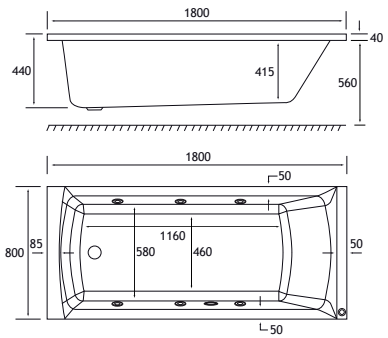



ROCKALL Single Ended, 14 Jet Whirlpool



1800 x 800 SE **14 Jet**

1800 x 800 x 440mm **284 Litres**

DESCRIPTION	CODE	€ EX VAT	€ INC VAT
1800 x 800 SE Rockall 14 jet Whirlpool - Beauforté	42.2011	2896.00	3562.08
PANELS			
1800 x 560 Front Panel-5mm	42.5012	178.00	218.94
800x560 End Panel-5mm	42.5022	97.00	119.31
1800 x 560 Front Panel-Beauforte	42.6012	285.00	350.55
800 x 560 End Panel-Beauforte	42.6022	174.00	214.02
1810 x 810 L Shape Flat Panel - Beauforté	42.6035	514.00	632.22
1800 Adjustable Front Panel - Beauforté	42.6032	404.00	496.92

WHIRLPOOL
HEAD REST
440 DEPTH
ULTRA STRONG

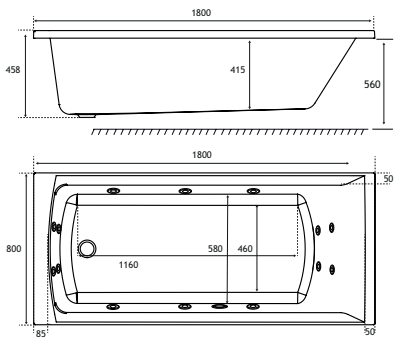



Bespoke Whirlpools

Warranty On All Systems 2 YEARS

Bespoke Whirlpool Bath Guide

Approximately 6 Weeks Lead Time (from confirmation of order)

1. **Select your Beaufort bath**
2. **Select one of the bespoke Whirlpool, Airspa or Combination systems.**
3. **Consider adding one or more of the additional options to complete your relaxation experience.**
4. **Add the cost of your bath, system, and additional options together to get total cost.**

Whirlpool Systems

Jets feed water into the bath as pressure, creating a range of massages. From gentle relaxation to sports hydro-massage.



Level One 6 Jet

DESCRIPTION	CODE	€ EX VAT	€ INC VAT
6 Jet Whirlpool System*	42.4001	1431.00	1760.13

Summary:
- 6 jet system

Jet type & location:
- 3 midi jets down each side

Switch type:
- Pneumatic switch

Fittings:
- Engineered legset

***Not compatible with Freestanding Baths.**



Level Two 8 Jet

DESCRIPTION	CODE	€ EX VAT	€ INC VAT
8 Jet Whirlpool System*	42.4002	1514.00	1862.22

Summary:
- 8 jet system

Jet type & location:
- 4 midi jets down each side

Switch type:
- Pneumatic switch

Fittings:
- Engineered legset

***Not compatible with Freestanding Baths.**



Level Three 14 Jet

DESCRIPTION	CODE	€ EX VAT	€ INC VAT
14 Jet Whirlpool System*	42.4003	1882.00	2314.86

Summary:
- 14 jet system

Jet type & location:
- 3 midi jets down each side
- 4 micro jets at each end

Switch type:
- Pneumatic switch

Fittings:
- Engineered legset

***Not compatible with Malin SE or DE or Freestanding Baths.**

Additional Options

DESCRIPTION	CODE	€ EX VAT	€ INC VAT
Single Colour change LED Light	42.4008	460.00	565.80
Ozonator	42.4009	285.00	350.55
In Line Water Heater	42.4011	915.00	1125.45
Bluetooth sound system	42.4012	2028.00	2494.44
Electronic Upgrade	42.4013	521.00	640.83

Single LED Light
One LED light that can change between seven colour settings. Colours: White, Cyan Blue, Green, Yellow, Red, Magento & Dark Blue.

In Line Water Heater
Heat the water during the whirlpool cycle to improve relaxation and bathing time by compensating for natural heat loss.

Ozonator (not suitable for Airspa)
Removes harmful bacteria during the whirlpool cycle for added hygiene.

Bluetooth Connection
Play music through your bath by connecting it via Bluetooth music streaming devices.

Electronic Upgrade
Removes pneumatic switch and replaces it with an electronic control pad (incudes low water sensor).

2 YEARS **Warranty On All Systems**

Bespoke Whirlpools

Airspa Systems

Air bubbles are released into the water producing a gentle, calming massaging fizz.



Level One 12 Jet

DESCRIPTION	CODE	€ EX VAT	€ INC VAT
12 Jet Airspa System	42.4004	1718.00	2113.14

Summary:
- 12 jet airspa system

Switch type:
- Pneumatic switch

Fittings:
- Engineered legset

*Not compatible with Freestanding Baths.



Level Two 12 Jet

DESCRIPTION	CODE	€ EX VAT	€ INC VAT
12 Jet Airspa System (Heated)	42.4005	1799.00	2212.77

Summary:
- 12 jet airspa system heated

Switch type:
- Pneumatic switch

Fittings:
- Engineered legset

*Not compatible with Freestanding Baths.

Combination Systems

Combination systems add the best of both systems without compromise. The systems can be used in unison or independently to aid wrapped relaxation and help invigorate the body.



Level One 6 Jet & 12 Jet Airspa

DESCRIPTION	CODE	€ EX VAT	€ INC VAT
6 Jet Whirlpool & 12 Jet Airspa Combination System*	42.4006	2985.00	3671.55

Summary:
- 6 jet whirlpool system & 12 jet airspa

Jet type & location:
- 3 midi jets down each side

Airspa:
- 12 jet airspa system heated

Switch type:
- Pneumatic switch

Fittings:
- Engineered legset

*Not compatible with Freestanding Baths.



Level Two 14 Jet & 12 Jet Airspa

DESCRIPTION	CODE	€ EX VAT	€ INC VAT
14 Jet Whirlpool & 12 Jet Airspa Combination System*	42.4007	3764.00	4629.72

Summary:
- 6 jet whirlpool system & 12 jet airspa

Jet type & location:
- 3 midi jets down each side

Airspa:
- 12 jet airspa system heated

Switch type:
- Pneumatic switch

Fittings:
- Engineered legset

*Not compatible with Malin SE or DE or Freestanding Baths.

Accessories

Portland Grips (Single)

DESCRIPTION	CODE	€ EX VAT	€ INC VAT
Chrome Grip (Single)	42.1001	28.00	34.44
Matt White Grip (Single)	42.1002	38.00	46.74
Matt Grey Grip (Single)	42.1003	38.00	46.74

DESCRIPTION	CODE	€ EX VAT	€ INC VAT
Matt Black Grip (Single)	42.1004	38.00	46.74
Matt Cappuccino Grip (Single)	42.1005	38.00	46.74
Matt Anthracite Grip (Single)	42.1006	38.00	46.74

Portland Twin Grips (Pair)

DESCRIPTION	CODE	€ EX VAT	€ INC VAT
Chrome Grip (pair)	42.0001	55.00	67.65
Matt White Grips (pair)	42.0002	72.00	88.56
Matt Grey Grips (pair)	42.0003	72.00	88.56

DESCRIPTION	CODE	€ EX VAT	€ INC VAT
Matt Black Grips (pair)	42.0004	72.00	88.56
Matt Cappuccino Grips (pair)	42.0005	72.00	88.56
Matt Anthracite Grips (pair)	42.0006	72.00	88.56

Chrome



Matt Anthracite



Matt Black



Matt Cappuccino

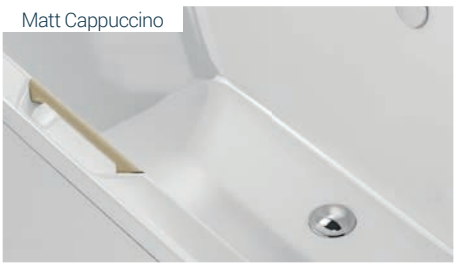

Matt Grey



Matt White



Rockall Twin Grips (Pair)

DESCRIPTION	CODE	€ EX VAT	€ INC VAT
Rockall SE Chrome Grips (pair)	42.1201	47.00	57.81
Rockall SE Matt White Grips (pair)	42.1202	65.00	79.95
Rockall SE Matt Grey Grips (pair)	42.1203	65.00	79.95

DESCRIPTION	CODE	€ EX VAT	€ INC VAT
Rockall SE Matt Black Grips (pair)	42.1204	65.00	79.95
Rockall SE Matt Cappuccino Grips (pair)	42.1205	65.00	79.95
Rockall SE Matt Anthracite Grips (pair)	42.1206	65.00	79.95

Chrome



Matt Anthracite

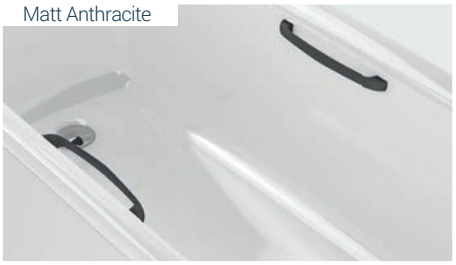

Matt Black



Matt Cappuccino



Matt Grey



Matt White



Accessories

Headrests

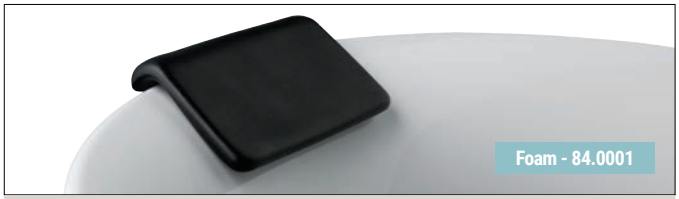

DESCRIPTION	CODE	€ EX VAT	€ INC VAT
Universal Foam Headrest	84.0001	55.00	67.65

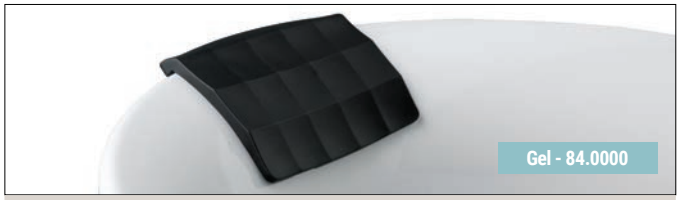

DESCRIPTION	CODE	€ EX VAT	€ INC VAT
Universal PU Gel Headrest	84.0000	107.00	131.61

Beaufort Wastes



Chrome Bath Pop up Waste & Overflow

CODE	€ EX VAT	€ INC VAT
98.1001	45.00	55.35



Matt White Bath Pop up Waste & Overflow

CODE	€ EX VAT	€ INC VAT
98.1002	65.00	79.95



Matt Grey Bath Pop up Waste & Overflow

CODE	€ EX VAT	€ INC VAT
98.1003	65.00	79.95

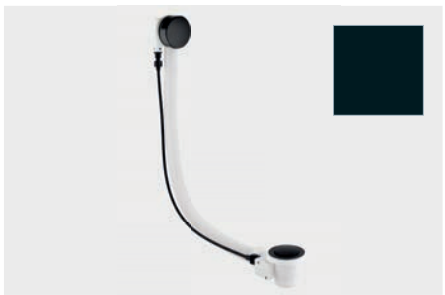

Matt Black Bath Pop up Waste & Overflow

CODE	€ EX VAT	€ INC VAT
98.1004	65.00	79.95



Matt Cappuccino Bath Pop up Waste & Overflow

CODE	€ EX VAT	€ INC VAT
98.1005	65.00	79.95

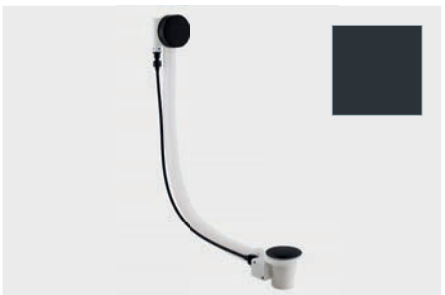

Matt Anthracite Bath Pop up Waste & Overflow

CODE	€ EX VAT	€ INC VAT
98.1006	65.00	79.95

Screens Suitable For Thin Edged Baths

Bath Model	Corniche 8mm Screen	Volente 6mm Hinge Bath Screen	Volente 8mm Hinge Bath Screen
Malin SE	69.0142	58.702	58.703
Portland SE TG	69.0142	58.702	58.703
Portland Low Level ECO	69.0142	58.702	58.703

Please refer to Panel & Screens section for all shower screens. **Page 137 to 145**

Bath Panels

Portland L Shape Panels



Portland L Shape Panels

DESCRIPTION	CODE	€ EX VAT	€ INC VAT
1700 x 560 L-Shape Front Panel Beaufort	42.5061	174.00	214.02
1600 x 560 L-Shape Front Panel Beaufort	42.5067	170.00	209.10
1500 x 560 L-Shape Front Panel Beaufort	42.5062	174.00	214.02
750 x 560 L-Shape Universal End Panel Beaufort	42.5063	98.00	120.54
1700 x 560 L-Shape Front Panel Beauforté	42.6061	490.00	602.70
1600 x 560 L-Shape Front Panel Beauforté	42.6067	490.00	602.70
1500 x 560 L-Shape Front Panel Beauforté	42.6062	490.00	602.70
750 x 510 L-Shape Universal End Panel Beauforté	42.6063	173.00	212.79

Portland P Shape Panels

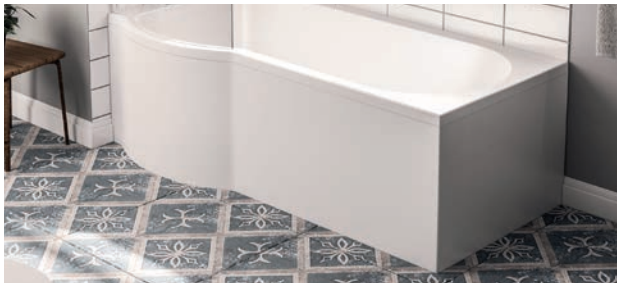

Portland P Shape Panels

DESCRIPTION	CODE	€ EX VAT	€ INC VAT
1700 x 560 P-Shape Front Panel Beaufort	42.5064	174.00	214.02
1600 x 560 P-Shape Front Panel Beaufort	42.5068	170.00	209.10
1500 x 560 P-Shape Front Panel Beaufort	42.5065	174.00	214.02
750 x 560 P-Shape Universal End Panel Beaufort	42.5066	98.00	120.54
1700 x 560 P-Shape Front Panel Beauforté	42.6064	481.00	591.63
1600 x 560 P-Shape Front Panel Beauforté	42.6068	481.00	591.63
1500 x 560 P-Shape Front Panel Beauforté	42.6065	481.00	591.63
750 x 510 P-Shape Universal End Panel Beauforté	42.6066	173.00	212.79

Shannon L Shape Panels



Shannon L Shape Panels

DESCRIPTION	CODE	€ EX VAT	€ INC VAT
Shannon L - Shape Front Panel 1700 Beaufort	42.5031	160.00	196.80
Shannon L - Shape Front Panel 1500 Beaufort	42.5032	160.00	196.80
Shannon L - Shape Universal End Panel	42.5033	90.00	110.70
Shannon L - Shape Front Panel 1700 Beauforté	42.6044	490.00	602.70
Shannon L - Shape Front Panel 1500 Beauforté	42.6045	490.00	602.70
Shannon L - Shape Universal End Panel Beauforté	42.6046	173.00	212.79

Shannon P Shape Panels



Shannon P Shape Panels

DESCRIPTION	CODE	€ EX VAT	€ INC VAT
Shannon P - Shape Front Panel 1700 Beaufort	42.5041	160.00	196.80
Shannon P - Shape Front Panel 1500 Beaufort	42.5042	160.00	196.80
Shannon P - Shape Universal End Panel Beaufort	42.5043	90.00	110.70
Shannon P - Shape Front Panel 1700 Beauforté	42.6041	481.00	591.63
Shannon P - Shape Front Panel 1500 Beauforté	42.6042	481.00	591.63
Shannon P - Shape Universal End Panel Beauforté	42.6043	173.00	212.79

Biscay Panels



Biscay Panels

DESCRIPTION	CODE	€ EX VAT	€ INC VAT
Biscay Panel 1700 x 800 Beaufort	42.5001	317.00	389.91
Biscay Panel 1700 x 750 Beaufort	42.5002	317.00	389.91
Biscay Panel 1600 x 725 Beaufort	42.5003	317.00	389.91
Biscay Panel 1700 x 800 Beauforté	42.6001	539.00	662.97
Biscay Panel 1700 x 750 Beauforté	42.6002	539.00	662.97
Biscay Panel 1600 x 725 Beauforté	42.6003	539.00	662.97

Acrylic Bath Panels

Adjustable Panels

Adjustable L Shape Panel



DESCRIPTION	CODE	€ EX VAT	€ INC VAT
1810 x 810 Adjustable L Shape - Beauforté	42.6031	630.00	774.90
1810 x 810 L Shape Flat Panel - Beauforté	42.6035	514.00	632.22

About: Compatible with all rectangular Beaufort baths (1800 x 800 or less) the L-shaped Adjustable Panel is an innovative 'fits all' solution.
Strengthened with fibreglass matting with a marine-grade gel coating, this panel can be cut to size to ensure a seamless finish.
Adjustable from 450mm-540mm. Plinth 150mm.

Adjustable Front Panels



DESCRIPTION	CODE	€ EX VAT	€ INC VAT
1800 Adjustable Front Panel - Beauforté	42.6032	404.00	496.92
1700 Adjustable Front Panel - Beauforté	42.6033	388.00	477.24
1500 Adjustable Front Panel - Beauforté	42.6034	388.00	477.24

Adjustable from 510mm-620mm. Plinth 150mm.

Flat Panels





Beaufort Flat Panels

DESCRIPTION	CODE	€ EX VAT	€ INC VAT
Beaufort 1900 (560H) Front Panel	42.5011	229.00	281.67
Beaufort 1800 (560H) Front Panel	42.5012	178.00	218.94
Beaufort 1700 (560H) Front Panel	42.5013	160.00	196.80
Beaufort 1675 (560H) Front Panel	42.5014	160.00	196.80
Beaufort 1650 (560H) Front Panel	42.5015	160.00	196.80
Beaufort 1600 (560H) Front Panel	42.5016	160.00	196.80
Beaufort 1500 (560H) Front Panel	42.5017	160.00	196.80
Beaufort 900 x 560 End Panel	42.5021	97.00	119.31
Beaufort 800 x 560 End Panel	42.5022	97.00	119.31
Beaufort 750 x 560 End Panel	42.5023	97.00	119.31
Beaufort 700 x 560 End Panel	42.5024	97.00	119.31
Beaufort 1700 x 430 Front Panel Low Level	42.5051	164.00	201.72
Beaufort 700 x 430 End Panel Low Level	42.5052	100.00	123.00

Beauforté Flat Panels

DESCRIPTION	CODE	€ EX VAT	€ INC VAT
Beauforté 1900 (560H) Front Panel	42.6011	335.00	412.05
Beauforté 1800 (560H) Front Panel	42.6012	285.00	350.55
Beauforté 1700 (560H) Front Panel	42.6013	269.00	330.87
Beauforté 1675 (560H) Front Panel	42.6014	269.00	330.87
Beauforté 1650 (560H) Front Panel	42.6015	269.00	330.87
Beauforté 1600 (560H) Front Panel	42.6016	269.00	330.87
Beauforté 1500 (560H) Front Panel	42.6017	269.00	330.87
Beauforté 900 x 560 End Panel	42.6021	192.00	236.16
Beauforté 800 x 560 End Panel	42.6022	174.00	214.02
Beauforté 750 x 560 End Panel	42.6023	160.00	196.80
Beauforté 700 x 560 End Panel	42.6024	160.00	196.80
Beauforté 1700 x 430 Front Panel Low Level	42.6051	278.00	341.94
Beauforté 700 x 430 End Panel Low Level	42.6052	164.00	201.72



CONTRACT

Baths

High Quality | UK Made | Easy Fit

Eastbrook's range of quality baths for the bathroom with a budget.

The increasing demand for cost effective bathing solutions lead our team to introduce this new product line.



Contents

Henbury Range 128 - 129

Henbury Range

HENBURY CONTRACT BATHS

The Henbury range is Eastbrook's solution to the increasing demand for quality baths on a budget.

With a curved back rest for comfort and the option of grips for added security, the Henbury is designed to provide you with a comfortable and enjoyable bathing experience.

The Henbury Range is available in three sizes. 1500x700, 1600x700 and 1700x700 with an added option of chrome grips.

High Quality | UK Made | Easy Fit



PRODUCT FEATURES

- 6 models
- Each available in: 3mm Standard or 3mm Twin Grip
- Supplied without pre-drilled tap holes or waste fittings
- 385mm depth on all Henbury models
- Square edge style bath with great top surface area



Henbury Baths

HENBURY CONTRACT BATHS

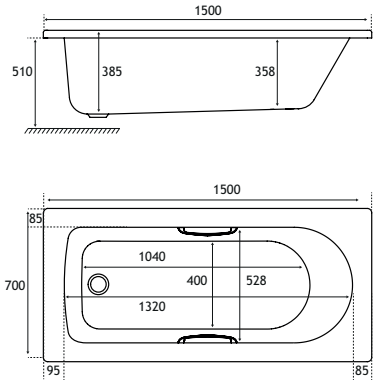

1500 x 700

1500 x 700 x 385mm — **179 Litres**

Description	Code	€ Ex VAT	€ Inc VAT
1500 x 700 Henbury Bath - 3mm	42.0173	300.00	**369.00**
1500 x 700 Henbury Bath Twin Grip - 3mm (Chrome grips included)	42.0176	343.00	**421.89**
Panels			
1700 x 510 Front Panel*	42.5071	52.00	**63.96**
700 x 510 End Panel*	42.5072	34.00	**41.82**

*Panel will require trimming to required length.

385 DEPTH HEAD REST SHOWER GRIPS

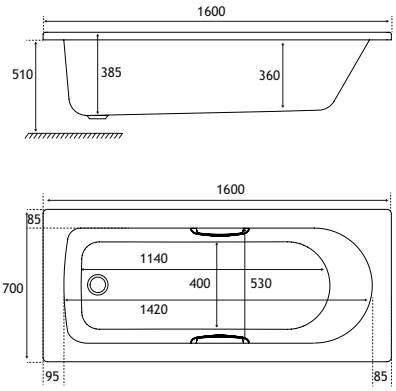

1600 x 700

1600 x 700 x 385mm — **197 Litres**

Description	Code	€ Ex VAT	€ Inc VAT
1600 x 700 Henbury Bath - 3mm	42.0172	300.00	**369.00**
1600 x 700 Henbury Bath Twin Grip - 3mm (Chrome grips included)	42.0175	343.00	**421.89**
Panels			
1700 x 510 Front Panel*	42.5071	52.00	**63.96**
700 x 510 End Panel*	42.5072	34.00	**41.82**

*Panel will require trimming to required length.

385 DEPTH HEAD REST SHOWER GRIPS

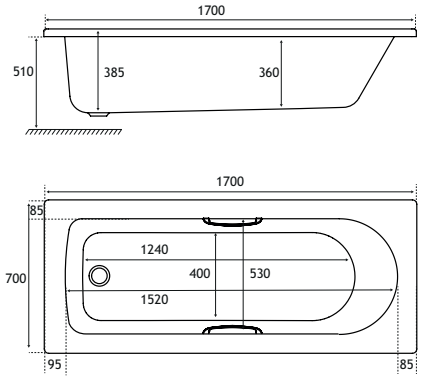

1700 x 700

1700 x 700 x 385mm — **231 Litres**

Description	Code	€ Ex VAT	€ Inc VAT
1700 x 700 Henbury Bath - 3mm	42.0171	300.00	**369.00**
1700 x 700 Henbury Bath Twin Grip - 3mm (Chrome grips included)	42.0174	343.00	**421.89**
Panels			
1700 x 510 Front Panel	42.5071	52.00	**63.96**
700 x 510 End Panel	42.5072	34.00	**41.82**

385 DEPTH HEAD REST SHOWER GRIPS

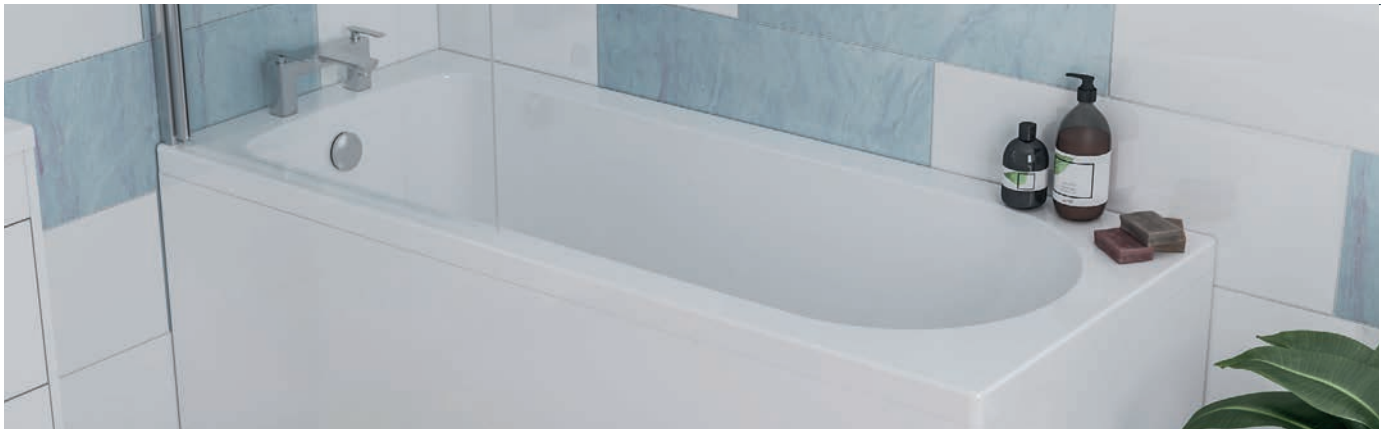



Panels & Screens

A large range of bath panels in a variety of contemporary styles and finishes. Many overbath shower screens in 5-8mm tempered glass, hinged, folded and fixed in clear or frosted glass.

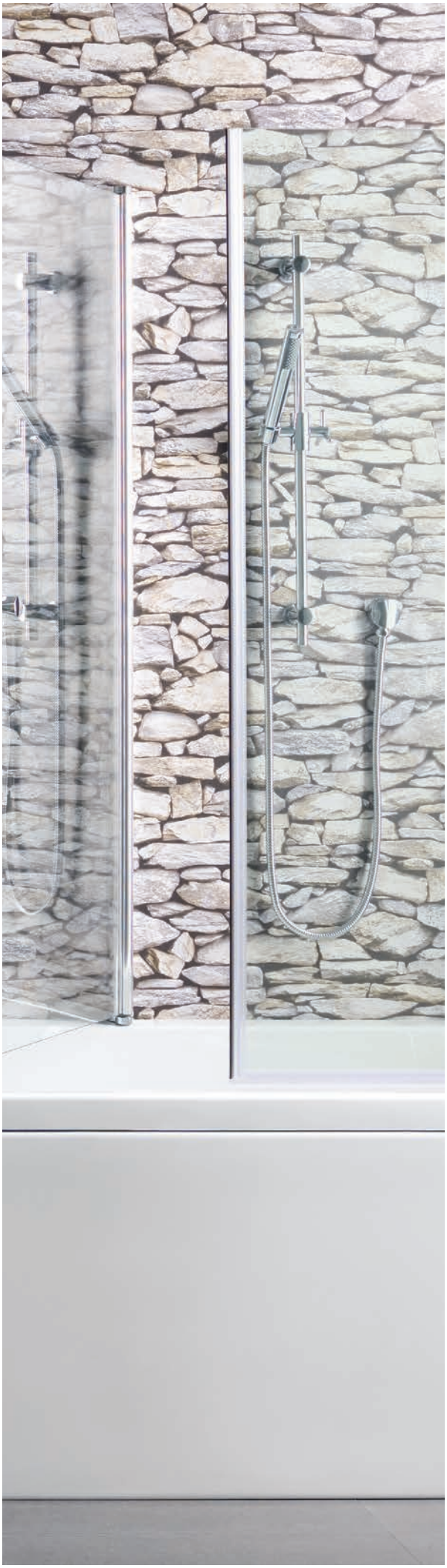

Contents

Bath panels	132 - 135
Toilet seats	136
Bath shower screens	137 - 145

Sherwood Bath Panels

SHERWOOD™ BATH PANELS

A comprehensive quality range of wood effect bath panels, seats and vanity units. The latest vinyl wrapped technology is used to produce an extremely tough panel with colour matching guaranteed throughout the co-ordinated products.


Sherwood Original design


Sherwood Classic design

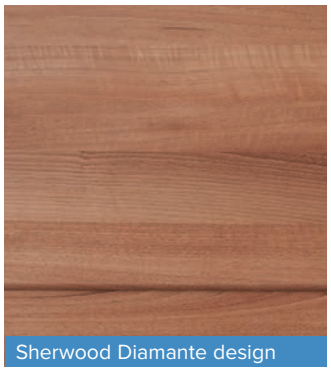
Sherwood Diamante design

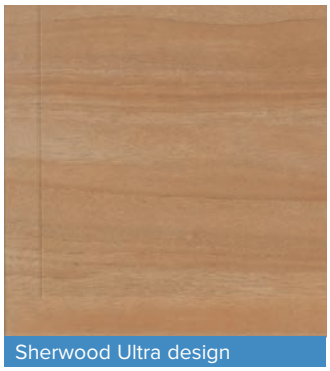
Sherwood Ultra design


Natural Oak


Light Walnut


Beech


High Gloss White


White Ash

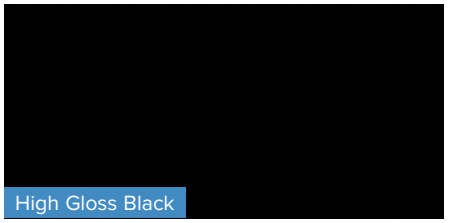
High Gloss Black

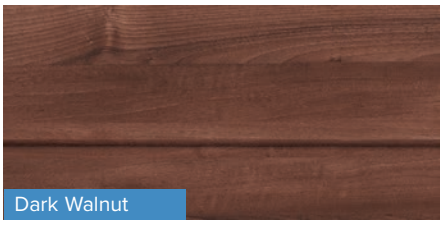
Dark Walnut

Sherwood is produced in four designs:

Sherwood Original with a traditional twist

Sherwood Classic for a more contemporary statement

Sherwood Diamante - a simple and modern design

Sherwood Ultra - a real gem in design combining both the Original and Classic values

Universal 18mm seats are available to complement, complete with a high quality bar hinge or the soft close hinges.

All items are vinyl-wrapped MDF.
Refer to style pages for finish availability.

Colours are subject to the limitations of the printing process. Colour samples available on request.

WAVE PANELS

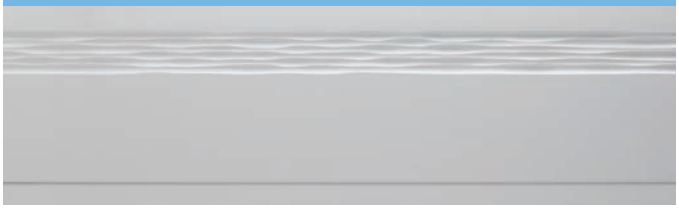


Panel detail

BATH PANELS

Description	Colour	Code	€ Ex VAT	€ Inc VAT
Wave 1700 front panel	High Gloss White	29.0018	219.00	**269.37**
Wave 1800 front panel	High Gloss White	29.0028	234.00	**287.82**
Wave 700 end panel	High Gloss White	29.0038	126.00	**154.98**
Wave 750 end panel	High Gloss White	29.0048	129.00	**158.67**
Wave 800 end panel	High Gloss White	29.0058	133.00	**163.59**

All 2-piece adjustable from 450 to 575 mm.
Thickness 15mm. Plinth 140mm.

Sherwood Bath Panels

SHERWOOD™



Natural Oak



White Ash

SHERWOOD ORIGINAL BATH PANELS				
Description	**Natural oak**	**White ash**	**€ Ex VAT**	**€ Inc VAT**
Sherwood original 1500 front bath panel	-	34.0035	170.00	**209.10**
Sherwood original 1600 front bath panel	-	34.0095	170.00	**209.10**
Sherwood original 1700 front bath panel	34.0043	34.0045	170.00	**209.10**
Sherwood original 1800 front bath panel	34.0053	34.0055	184.00	**226.32**
Sherwood original 800 end bath panel	34.0083	34.0085	124.00	**152.52**

NB. All panels include extra deep plinth, allowing panel to be adjustable from 450mm to 575mm. The 800 mm universal end panel can be cut down to 700mm or 750mm size without loss of pattern.

Extra deep plinth allows panel to be adjustable in height from 450 to 575mm. Thickness 15mm. Plinth height 150mm.

FEATURES

- British manufactured
- FSC - All materials sourced from protected forests
- MDF
- Fully adjustable plinth



End Panel

SHERWOOD DIAMANTE



Light Walnut

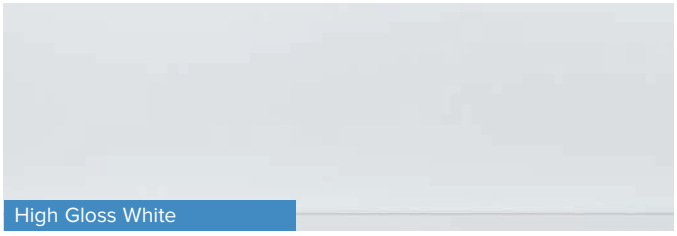

High Gloss White

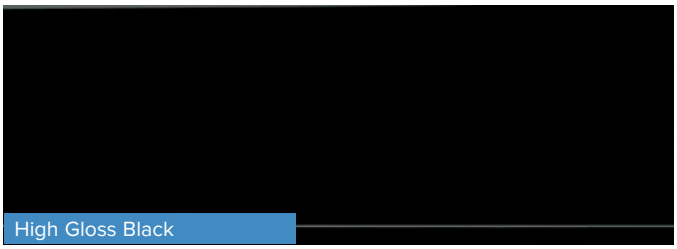

High Gloss Black



Dark Walnut

DIAMANTE BATH PANELS				
Description	**High gloss white**	**High gloss black**	**€ Ex VAT**	**€ Inc VAT**
Diamante 1700 front panel	34.0701	34.07001	236.00	**290.28**
Diamante 1800 front panel	34.0711	34.07101	258.00	**317.34**
Diamante 800 end panel	34.0731	34.07301	184.00	**226.32**

Description	**Light walnut**	**Dark walnut**	**€ Ex VAT**	**€ Inc VAT**
Diamante 1700 front panel	34.01604	34.01605	170.00	**209.10**
Diamante 1800 front panel	34.01704	34.01705	188.00	**231.24**
Diamante 800 end panel	34.01904	34.01905	122.00	**150.06**

NB. 700/750 panels can be obtained by cutting down the 800 panels. All 2-piece adjustable from 450 to 575mm. Thickness 15mm. Plinth 150mm.

Colours are subject to the limitations of the printing process.

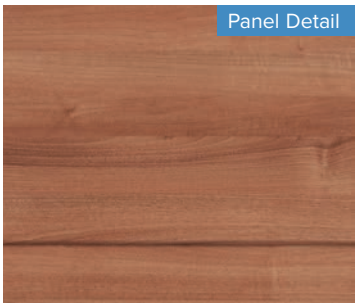

Panel Detail

Sherwood Classic & Ultra Bath Panels

SHERWOOD CLASSIC



High Gloss White



Beech

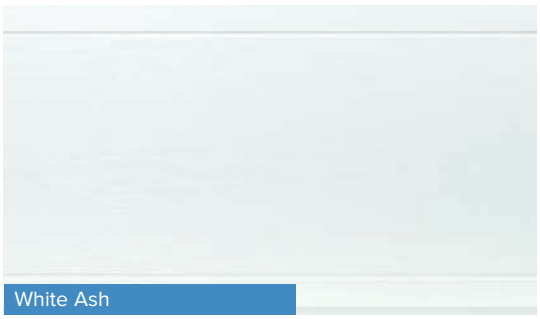

White Ash

SHERWOOD CLASSIC BATH PANELS

Description	High gloss white	€ Ex VAT	€ Inc VAT	White ash	Beech	€ Ex VAT	€ Inc VAT
Sherwood classic 1700 front panel	34.1048	222.00	**273.06**	34.1045	34.1047	170.00	**209.10**
Sherwood classic 1800 front panel	34.1058	244.00	**300.12**	34.1055	34.1057	184.00	**226.32**
Sherwood classic 800 universal end panel	34.1088	170.00	**209.10**	34.1085	34.1087	122.00	**150.06**

Colours are subject to the limitations of the printing process. Colour samples available on request.

FEATURES
- British manufactured
- FSC - All materials sourced from protected forests
- MDF
- Fully adjustable plinth



Panel Detail

SHERWOOD ULTRA

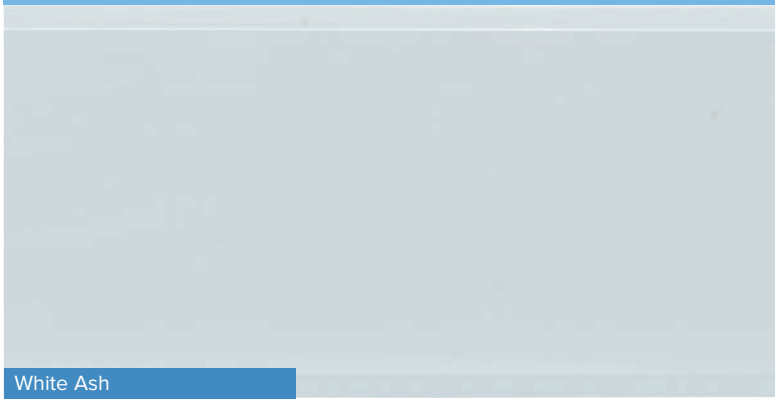

White Ash



High Gloss White

SHERWOOD ULTRA BATH PANELS

Description	White ash	€ Ex VAT	€ Inc VAT	High gloss white	€ Ex VAT	€ Inc VAT
Ultra 1700 panel	34.0065	170.00	**209.10**	34.0068	222.00	**273.06**
Ultra 1800 panel	34.0135	184.00	**226.32**	34.0138	244.00	**300.12**
Ultra 800 panel	34.0075	122.00	**150.06**	34.0078	170.00	**209.10**

NB. All panels include extra deep plinth adjustable in height from 450-575mm. The 800 universal end panel can be cut down to 700mm or 750mm size.

Extra deep plinth allows panel to be adjustable in height from 450mm to 575mm.

Thickness 15mm. Plinth height 150mm.

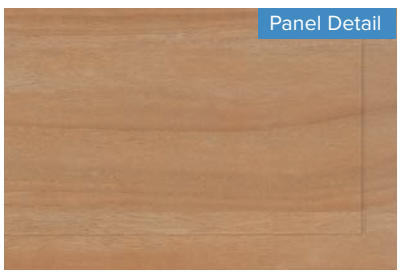

Panel Detail

Diamante, Bonito & Acer Bath Panels

DIAMANTE

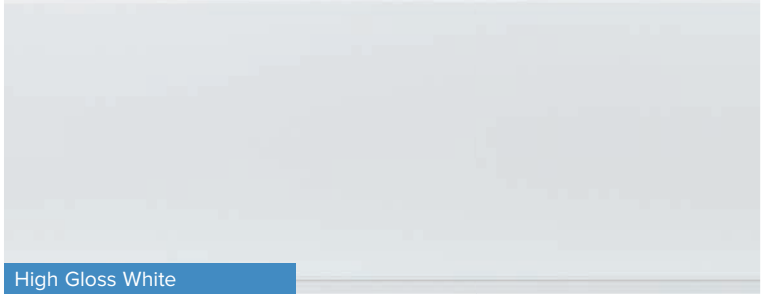

High Gloss White



High Gloss Black

DIAMANTE BATH PANELS

Description	Colour	Code	€ Ex VAT	€ Inc VAT
Diamante 1700 front panel	White	34.0701	236.00	**290.28**
Diamante 1700 front panel	Black	34.07001	236.00	**290.28**
Diamante 1800 front panel	White	34.0711	258.00	**317.34**
Diamante 1800 front panel	Black	34.07101	258.00	**317.34**
Diamante 800 end panel	White	34.0731	184.00	**226.32**
Diamante 800 end panel	Black	34.07301	184.00	**226.32**

NB. 700/750 panels can be obtained by cutting down the 800 panels. All 2-piece adjustable from 450 to 575 mm. Thickness 15mm. Plinth 150mm.

High Gloss White MDF panels to match Madrid and Diamante Units

FEATURES
- British manufactured
- FSC - All materials sourced from protected forests
- MDF
- Fully adjustable plinth

BONITO

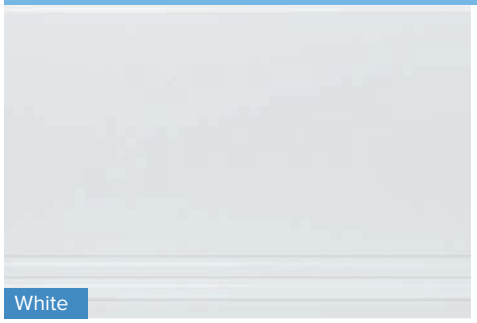

White

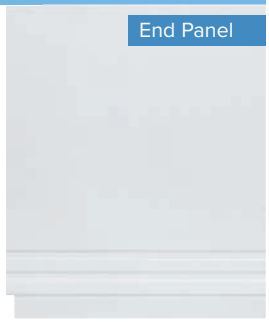

End Panel

BONITO/DAISY HIGH GLOSS BATH PANELS

Description	Colour	Code	€ Ex VAT	€ Inc VAT
Bonito/Daisy 1700 front panel	White	34.0161	222.00	**273.06**
Bonito/Daisy 1800 front panel	White	34.0171	244.00	**300.12**
Bonito/Daisy 800 end panel	White	34.0191	170.00	**209.10**

NB. 700/750 panels can be obtained by cutting down the 800 panels. All 2-piece adjustable from 450 to 575 mm. Thickness 15mm. Plinth 150mm

ACER



Dark Walnut



Natural Oak

ACER BATH PANELS

Description	Dark Walnut	Natural Oak	€ Ex VAT	€ Inc VAT
Acer 1700 front panel	29.00605	29.0063	237.00	**291.51**
Acer 1800 front panel	29.00705	29.0073	247.00	**303.81**
Acer 700 end panel	29.00805	29.0083	133.00	**163.59**
Acer 750 end panel	29.00905	29.0093	139.00	**170.97**
Acer 800 end panel	29.01005	29.0103	143.00	**175.89**

All 2-piece adjustable from 450 to 575 mm. Thickness 15mm. Plinth 150mm

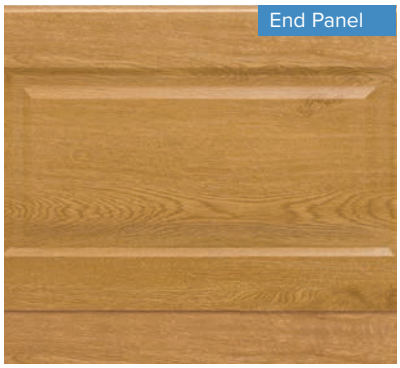

End Panel

Toilet Seats


Light Walnut


White Ash


Beech


Dark Walnut

FEATURES
- British manufactured
- FSC - All materials sourced from protected forests
- MDF
- Soft close seat option available
- Soft close seat is top fixing



SHERWOOD TOILET SEATS	Suitable to match all Sherwood styles of panel with an option of a soft-close hinge.					
Description	**White Ash**	**Light Walnut**	**Beech**	**Dark Walnut**	**€ Ex VAT**	**€ Inc VAT**
Sherwood MDF seat in vinyl wrap with chrome-plated bar hinges	34.1095	34.10904	34.1097	34.10905	135.00	**166.05**
Sherwood MDF seat in vinyl wrap with chrome plated soft-close hinges *	34.0125	34.01204	34.0127	34.01205	220.00	**270.60**

*Not bar hinges.


High Gloss White


Natural Oak

FEATURES
- Soft close seat option available
- Compatible with Arkitect, Belgravia and Tamarind pans (except lever flush Tamarind cistern)

Sherwood toilet seat 440mm (from back of hinge) x 375mm at widest point, 420mm x 375mm lid size.

Colours subject to the limitations of the printing process.

SHERWOOD TOILET SEATS	Suitable to match all Sherwood styles of panel with an option of a soft-close hinge.					
Description	**Natural oak**	**€ Ex VAT**	**€ Inc VAT**	**High gloss white**	**€ Ex VAT**	**€ Inc VAT**
Sherwood MDF seat in vinyl wrap with chrome-plated bar hinges	34.1093	135.00	**166.05**	34.1098	161.00	**198.03**
Sherwood MDF seat in vinyl wrap with chrome plated soft-close hinges*	34.0123	220.00	**270.60**	34.0128	237.00	**291.51**

*Not bar hinges.

DIAMANTE HIGH GLOSS TOILET SEAT			
Description	**High gloss black**	**€ Ex VAT**	**€ Inc VAT**
Sherwood seat with Chrome hinges	34.10901	161.00	**198.03**
Sherwood seat soft close hinge	34.01201	237.00	**291.51**

NB. Soft close hinges are standard not bar type.

FEATURES
- Soft close seat option available




High Gloss Black

Volente Overbath Slider





FEATURES
- 6mm tempered glass
- Runners release for ease of cleaning
- Easy clean glass

VOLENTE OVERBATH SLIDER

Description (Width x Height)	Adjustment	Code	€ Ex VAT	€ Inc VAT
Volente 1690 x 1475 Overbath Slider 6mm, opening 690	1670-1690	69.0034	534.00	**656.82**
Volente 1790 x 1475 Overbath Slider 6mm, opening 740	1770-1790	69.0035	553.00	**680.19**
Volente 690 x 1475 Overbath End Panel	670-690	69.0036	237.00	**291.51**
Volente 740 x 1475 Overbath End Panel	720-740	69.0037	240.00	**295.20**
Volente 790 x 1475mm Overbath End Panel	770-790	69.0038	245.00	**301.35**



BATH SCREEN

Description (Width x Height)	Code	€ Ex VAT	€ Inc VAT
6mm Bathscreen 1000 x 1400mm	69.0164	380.00	**467.40**

Only suitable for a bath with a flat rim.

FEATURES
- 6mm tempered glass
- 180˚ hinge
- 1400mm height
- 250mm fixed panel
- 750mm hinged panel
- Support bar included

Bath Screens



Description	Dimension width x height	Code	€ Ex VAT	€ Inc VAT
Sail shape screen with towel rail	895 x 1410mm	69.701	346.00	**425.58**

FEATURES
- 5mm tempered glass



Description	Dimension width x height	Code	€ Ex VAT	€ Inc VAT
Bathguard Fixed Panel	300 x 1400mm	58.715	154.00	**189.42**

FEATURES
- 6mm tempered glass



Description	Dimension width x height	Code	€ Ex VAT	€ Inc VAT
Corniche bath screen with rail	800 x 1400mm	69.0142	406.00	**499.38**

FEATURES
- 8mm tempered glass



Description	Dimension width x height	Code	€ Ex VAT	€ Inc VAT
Radius corner screen	750 x 1380mm	69.702	299.00	**367.77**

FEATURES
- 5mm tempered glass

Volente 1000 & 1250 Screens







VOLENTE

A universal screen which will fit a corner, offset corner or straight bath. It has a continuous wiper seal on the bottom and the folding section is operated by an inter-linking, 360° cog assembly. 1400 x 1000/1250mm with an adjustment of 990-1000/1240-1250, 5mm tempered glass.

Description	Dimension height x width	Code	€ Ex VAT	€ Inc VAT
Volente 1000 4 fold screen	1400 x 1000	58.700	252.00	**309.96**
Volente 1250 5 fold screen	1400 x 1250	58.701	313.00	**384.99**

FEATURES
- 5mm tempered glass





Description	Code	€ Ex VAT	€ Inc VAT
Volente 1000mm 1 fixed and 3 folding panel LH	58.710L	517.00	**635.91**
Volente 1000mm 1 fixed and 3 folding panel RH	58.710R	517.00	**635.91**

NB Panels fold over bath only. Only suitable for a bath with a flat rim.

FEATURES
- 6mm tempered glass
- Easy clean glass



Description	Code	€ Ex VAT	€ Inc VAT
Volente 1250mm 1 fixed and 4 folding panels LH	58.711L	643.00	**790.89**
Volente 1250mm 1 fixed and 4 folding panels RH	58.711R	643.00	**790.89**

NB Panels fold over bath only. Only suitable for a bath with a flat rim.

FEATURES
- 6mm tempered glass
- Easy clean glass

Volente Hinged Screens



Description	Dimension width x height	Code	€ Ex VAT	€ Inc VAT
Volente 2 part hinged screen	1465 x 1550mm	58.706	553.00	**680.19**

Volente bath screen featuring two hinged panels.
*Only suitable for a flat rimmed bath

FEATURES
- 6mm tempered glass
- Easy clean glass



Description	Dimension width x height	Code	€ Ex VAT	€ Inc VAT
Volente 1 fixed 2 hinge panel	1475 x 1550mm	58.709	654.00	**804.42**

Volente bath screen featuring one fixed panel and two hinged panels.
*Only suitable for a flat rimmed bath

FEATURES
- 6mm tempered glass
- Easy clean glass



BEAUFORT SCREENS

Description	Code	€ Ex VAT	€ Inc VAT
Beaufort screen 1400mm	58.4000	469.00	**576.87**
Beaufort screen 1400mm with towel rail	69.0141	630.00	**774.90**

NB. Soft close hinges are standard not bar type.

FEATURES
- 6mm tempered glass
- Easy clean glass



TYPE 1 SCREENS

Description	Code	€ Ex VAT	€ Inc VAT
Type 1 Screen across bath for 700 width	58.716	247.00	**303.81**
Type 1 screen across bath for 750 width	58.717	255.00	**313.65**
Type 1 screen across bath for 800 width	58.718	265.00	**325.95**
Type 1 screen across bath for 900 width	58.719	272.00	**334.56**
Type 1 universal side screen 1400 x 800mm	58.720	185.00	**227.55**

Type 1 bath screen with two hinged panels - when fitting on a double ended bath ensure taps are mounted left or right of screen wall profile.

FEATURES
- 6mm tempered glass
- Easy clean glass

Volente Hinged Screens



Description	Dimension width x height	Code	€ Ex VAT	€ Inc VAT
Volente 6mm hinge bath screen	850 x 1500mm	58.702	303.00	**372.69**

FEATURES
- 6mm tempered glass
- Easy clean glass



Description	Dimension width x height	Code	€ Ex VAT	€ Inc VAT
Volente 8mm hinge bath screen	850 x 1500mm	58.703	314.00	**386.22**

FEATURES
- 8mm tempered glass
- Easy clean glass



Description	Dimension width x height	Code	€ Ex VAT	€ Inc VAT
Volente 6mm hinge bath screen frosted	850 x 1500mm	58.704	259.00	**318.57**

FEATURES
- 6mm tempered glass
- Easy clean glass



Description	Dimension width x height	Code	€ Ex VAT	€ Inc VAT
Volente 8mm hinge bath screen frosted	850 x 1500mm	58.705	278.00	**341.94**

FEATURES
- 8mm tempered glass
- Easy clean glass

Designer Bath Screens

L SHAPE & P SHAPE SCREENS

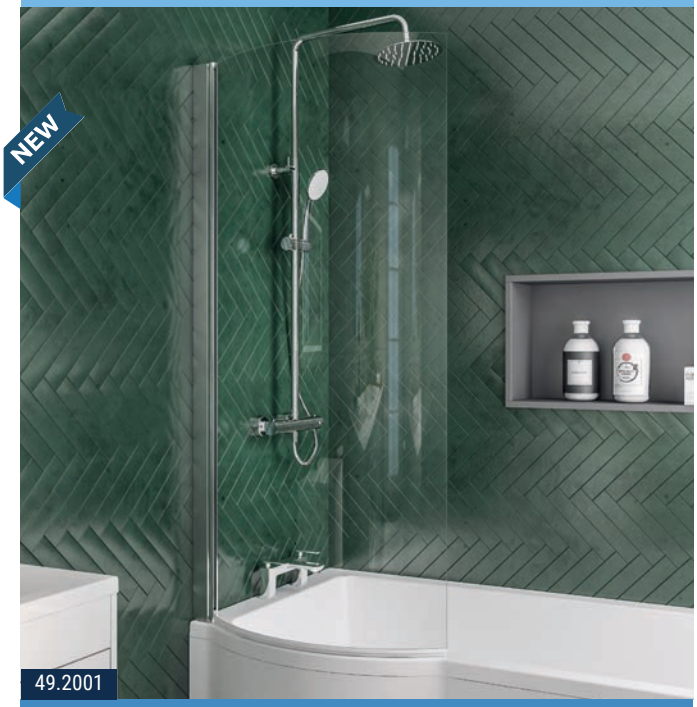

P SHAPE SCREENS - LEFT HAND

Description	Colour	Code	€ Ex VAT	€ Inc VAT
P Shape Bath Screen 6mm - Left Hand (LH)	Brushed Brass	49.2005	327.00	**402.21**
P Shape Bath Screen 6mm - Left Hand (LH)	Matt Black	49.2003	307.00	**377.61**
P Shape Bath Screen 6mm - Left Hand (LH)	Chrome	49.2001	292.00	**359.16**

FEATURES
• 6mm P Shape clear glass • Concealed profile • Zinc-alloy pivot hinges



P SHAPE SCREENS - RIGHT HAND

Description	Colour	Code	€ Ex VAT	€ Inc VAT
P Shape Bath Screen 6mm - Right Hand (RH)	Brushed Brass	49.2006	327.00	**402.21**
P Shape Bath Screen 6mm - Right Hand (RH)	Matt Black	49.2004	307.00	**377.61**
P Shape Bath Screen 6mm - Right Hand (RH)	Chrome	49.2002	292.00	**359.16**

FEATURES
• 6mm P Shape clear glass • Concealed profile • Zinc-alloy pivot hinges



L SHAPE SCREENS - LEFT HAND

Description	Colour	Code	€ Ex VAT	€ Inc VAT
L Shape Bath Screen 6mm - Left Hand (LH)	Brushed Brass	49.2012	356.00	**437.88**
L Shape Bath Screen 6mm - Left Hand (LH)	Matt Black	49.2009	328.00	**403.44**
L Shape Bath Screen 6mm - Left Hand (LH)	Chrome	49.2007	308.00	**378.84**

FEATURES
• 6mm L Shape clear glass • Concealed profile • Zinc-alloy pivot hinges



L SHAPE SCREENS - RIGHT HAND

Description	Colour	Code	€ Ex VAT	€ Inc VAT
L Shape Bath Screen 6mm - Right Hand (RH)	Brushed Brass	49.2013	356.00	**437.88**
L Shape Bath Screen 6mm - Right Hand (RH)	Matt Black	49.2011	328.00	**403.44**
L Shape Bath Screen 6mm - Right Hand (RH)	Chrome	49.2008	308.00	**378.84**

FEATURES
• 6mm L Shape clear glass • Concealed profile • Zinc-alloy pivot hinges

Designer Bath Screens

L SHAPE & P SHAPE SCREENS



58.4001


69.3002R


69.0143

L SHAPE & P SHAPE SCREENS

Description	Colour	Code	€ Ex VAT	€ Inc VAT
Beaufort Type 1 Screen, 6mm glass	Chrome	58.4001	622.00	**765.06**
Type 2 Screen - 1 folding door LH Chrome, easy clean 6mm glass	Chrome	69.3002L	873.00	**1073.79**
Type 2 Screen - 1 folding door RH Chrome, easy clean 6mm glass	Chrome	69.3002R	873.00	**1073.79**
P Shape Screen with towel rail, 6mm glass	Chrome	69.0143	579.00	**712.17**

Beaufort Screen Compatability
Please refer to page 123 of the Beaufort bath section to view which baths these screens fit well with.


69.0140


69.0139


58.713

L SHAPE & P SHAPE SCREENS

Description	Colour	Code	€ Ex VAT	€ Inc VAT
C Shape Shower Screen 6mm, with easy clean	Chrome	69.0140	321.00	**394.83**
C Shape Shower Screen 5mm, with easy clean	Chrome	69.0139	216.00	**265.68**
Shannon Shower Screen 6mm, easy clean	Chrome	58.713	317.00	**389.91**

Beaufort Screen Compatability
Please refer to page 123 of the Beaufort bath section to view which baths these screens fit well with.

Designer Bath Screens

CHROME DESIGNER SCREENS - 6MM GLASS







DESIGNER SCREENS - CHROME

Description	Colour	Code	€ Ex VAT	€ Inc VAT
6mm Radius bath screen 800 x 1400	Chrome	49.0106	238.00	**292.74**
6mm Straight bath screen 800 x 1400	Chrome	49.1010	237.00	**291.51**
6mm Straight bath screen 300 x 1400	Chrome	49.1011	150.00	**184.50**

FEATURES
- 6mm tempered glass
- Easy clean glass
- 180 degrees barrel hinge
- Fully concealed fittings

MATT BLACK DESIGNER SCREENS - 6MM GLASS



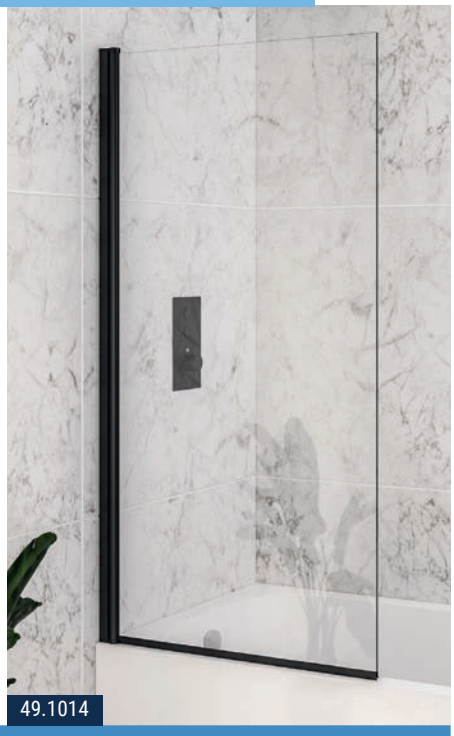

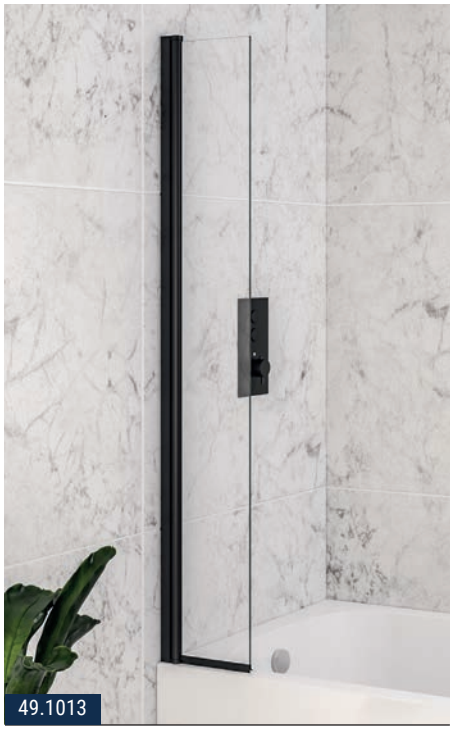

DESIGNER SCREENS - MATT BLACK

Description	Colour	Code	€ Ex VAT	€ Inc VAT
6mm Radius bath screen 800 x 1400	Matt Black	49.0108	238.00	**292.74**
6mm Straight bath screen 800 x 1400	Matt Black	49.1014	237.00	**291.51**
6mm Straight bath screen 300 x 1400	Matt Black	49.1013	149.00	**183.27**

FEATURES
- 6mm tempered glass
- Easy clean glass
- 180 degrees barrel hinge
- Fully concealed fittings
- Anodised profile

Beaufort & Vantage Bath Screens



69.4001L (Left Hand Shown)

Description	Dimension width x height	Code	€ Ex VAT	€ Inc VAT
Beaufort Screen Type 1 Pivot Door LH	(775+850) x 1535	69.4001L	423.00	**520.29**
Beaufort Screen Type 1 Pivot Door RH	(775+850) x 1535	69.4001R	423.00	**520.29**

FEATURES

- 6mm tempered glass
- Easy clean glass
- Left Hand or right hand options
- Easy open pivot door, with handle.

BEAUFORT SCREENS



69.4002L (Left Hand Shown)

Description	Dimension width x height	Code	€ Ex VAT	€ Inc VAT
Beaufort Screen Type 2 Folding Door LH	(785+465) x 1535	69.4002L	346.00	**425.58**
Beaufort Screen Type 2 Folding Door RH	(785+465) x 1535	69.4002R	346.00	**425.58**

FEATURES

- 6mm tempered glass
- Easy clean glass
- Left hand or right hand options
- Easy open folding door.



69.4003

Description	Dimension width x height	Code	€ Ex VAT	€ Inc VAT
Beaufort Screen Type 3 Sliding Door	(985+850) x 1535	69.4003	441.00	**542.43**

FEATURES

- 6mm tempered glass
- Easy clean glass
- Works on both LH & RH P-Shape baths
- Easy slide action screen

VANTAGE FRAMED HINGE SCREEN



49.1101

Description	Dimension width x height	Code	€ Ex VAT	€ Inc VAT
6mm Matt Black Framed Hinge Bath Screen	800 x 1400	49.1101	287.00	**353.01**

FEATURES

- 6mm tempered glass
- Easy clean glass



Sanitaryware

From the timeless, traditional classic designs to the latest contemporary and minimalist styling, you are sure to find the right suite to fit your décor and budget.



Contents

Andelle	148-149
Arkitect	150
Belgravia	151
Bijou	152-153
Cheverney	154-155
Collindale	156-157
Courchevel	158-159
Crowthorne	160-161
DOC M Pack	162-163
Dura	164-167
Farringdon	168-169
Kenley	170-171
Kompact	172-175
Loire	176-179
Metro Short Projection	180-181
Minima	182
Mentmore	183
Northall	184-185
Tamarind	186-187
Temptation	188-189
Wingrave II	190-191
Sit-On Basins	192
Cloakroom Basins	193-195
Inset Vanity Basins	196
Semi-Recessed Basins	197
Back To Wall Pans	198-199
Wall Hung Pans	200
Jollytronic	201
Concealed Cisterns	201-202
Sanitaryware Accessories	203

Andelle Range

ANDELLE

A value for money modern suite with clean lines.

FEATURES
- Cloakroom basin on full pedestal
- Soil can be turned left or right
- Top fix seat
- Soft close seat can be unclipped for cleaning

Description	Code	€ Ex VAT	€ Inc VAT
Fabriano Mirror 700 x 500 LED	40.1004	485.00	**596.55**







Description	Code	€ Ex VAT	€ Inc VAT
Andelle WC Pan	24.0006	153.00	**188.19**
Andelle WC Cistern inc Fittings	24.0007	115.00	**141.45**
Andelle soft close seat	24.0011	90.00	**110.70**
Jollytronic universal bottom entry cistern fitting	7.0000	189.00	**232.47**

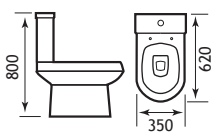

*Soil can be turned left or right

24.0006 24.0007



Description	Code	€ Ex VAT	€ Inc VAT
Andelle 430mm 1TH Basin	24.0010	89.00	**109.47**
Andelle Pedestal	24.0009	47.00	**57.81**

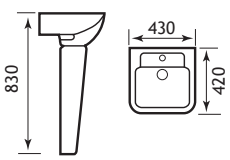

24.0010 24.0009



Description	Code	€ Ex VAT	€ Inc VAT
Andelle 540mm 1TH Basin	24.0008	96.00	**118.08**
Andelle Pedestal	24.0009	47.00	**57.81**

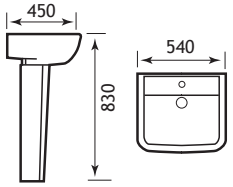

24.0008 24.0009

Andelle Range



Complete the LOOK



52.014



52.005

Description	Dimension width x projection	Code	€ Ex VAT	€ Inc VAT
Metal Towel Ring	190x170x57	52.014	51.00	**62.73**
Metal Soap Dispenser	52x100	52.005	83.00	**102.09**



Arkitect Range

ARKITECT



Image shown with Bonito Furniture. For full range of Bonito furniture in our Vanity section.

Basin for illustration purposes only.

Perfect for the smaller bathroom or cloakroom, the Arkitect range combines style with space-saving practicality.

Description	Code	€ Ex VAT	€ Inc VAT
Arkitect BTW WC pan*	10.017	182.00	**218.40**
Loire/Arkitect deluxe seat	50.001	70.00	**86.10**
Loire soft close seat**	50.002	185.00	**227.55**

Can be fitted with a Sherwood seat.
**Bottom fix

BTW Pan extras

Description	Code	€ Ex VAT	€ Inc VAT
Vantage Plain Hidden Cistern	17.001	252.00	**309.96**
Vantage Hidden Cistern with Jacket	17.3029	290.00	**356.70**
EB Jacket Hidden Cistern - Bottom Inlet	53.001	157.00	**193.11**
Flexible WC Connector for BTW Pans *	2.009	56.00	**68.88**

*Pan connector 2.009 is recommended for use with our BTW pans.

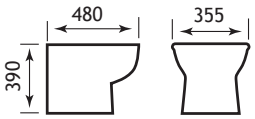

10.017

Belgravia Range

BELGRAVIA



Sherwood high gloss white seat shown. For alternative colours please see our Panels & Screens section P136



A traditional design with unmistakable period details, Belgravia is an affordable classic with a distinctive Victorian feel.

Belgravia WC

Description	Code	€ Ex VAT	€ Inc VAT
Belgravia WC Pan	24.0001	222.00	**273.06**
Belgravia Cistern inc fittings	24.0002	150.00	**184.50**
Rhone soft close seat	40.0001	118.00	**145.14**
Jollytronic universal bottom entry cistern fitting **	7.0000	189.00	**232.47**
Sherwood seat HGW	34.1098	161.00	**198.03**

Can be fitted with a Sherwood seat.
**For more information see page 136.

Belgravia Basin

Description	Code	€ Ex VAT	€ Inc VAT
Belgravia 1TH Basin	24.0003	157.00	**193.11**
Belgravia 2TH Basin	24.0004	157.00	**193.11**
Belgravia Pedestal	24.0005	66.00	**81.18**

FEATURES
- **Soft close seat, lifts off for easy cleaning**
- **Water inlet left or right**
- **Soil can be turned left or right**

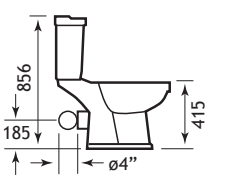

24.0001

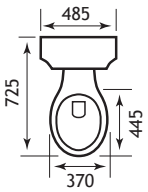

24.0002

*Soil can be turned left or right

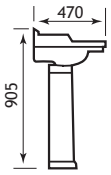

24.0005

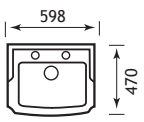

24.0003/4

Complete the LOOK

Accessories

Description	Code	€ Ex VAT	€ Inc VAT
Rockingham Glass Shelf	52.049	136.00	**167.28**
Rockingham Double Tumbler Holder	52.042	126.00	**154.98**
Rockingham Towel Ring	52.044	83.00	**102.09**

Bijou Range



A jewel in the Eastbrook range, featuring subtle angular lines to create a sleek and contemparary look.

BIJOU 500 BASIN



Description	Code	€ Ex VAT	€ Inc VAT
Bijou 500 1TH Basin*	26.0107	143.00	**175.89**
Bijou 500 2TH Basin*	26.0108	143.00	**175.89**
Bijou Pedestal	26.0077	87.00	**107.01**
Bijou Semi pedestal	26.0085	73.00	**89.79**

BIJOU PAN

Rimless Tech
Soft Close Seat
Comfort Height



Description	Code	€ Ex VAT	€ Inc VAT
Bijou Pan	26.0071	278.00	**341.94**
Bijou Rimless Pan	26.0082	290.00	**356.70**
Bijou Comfort Height Pan	26.0111	301.00	**370.23**
Bijou Comfort Height Rimless Pan	26.0112	321.00	**394.83**
Bijou Cistern	26.0074	147.00	**180.81**
Bijou/Collindale Soft close seat	26.0070	115.00	**141.45**

FEATURING
Rimless Technology

Rimless Tech
Water Saving Tech

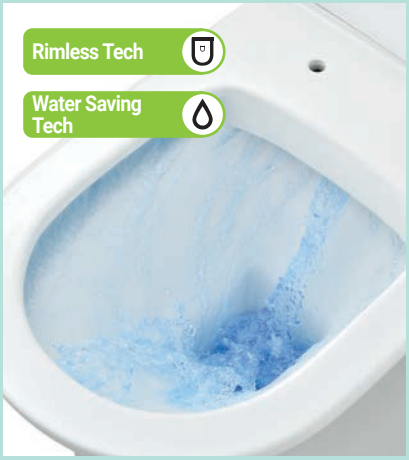

EASY CLEAN
Nowhere for germs to hide.

AESTHETICS
Simplistic look.

EFFICIENT
A complete rim flush for effective cleaning.

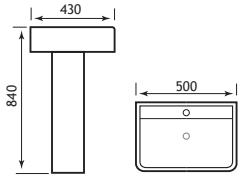

26.0077 26.0107

*See page 201 for Jollytronic information.

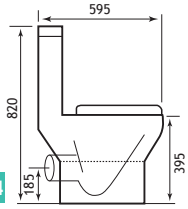

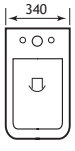

26.0071/82/74 26.0074

Bijou Range



BIJOU WALL HUNG PAN



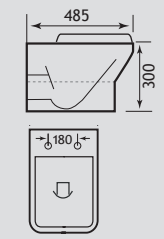

26.0072/26.0083

Description	Code	€ Ex VAT	€ Inc VAT
Bijou Wall Hung Pan	26.0072	307.00	**377.61**
Bijou Rimless Wall Hung Pan	26.0083	307.00	**377.61**
Bijou/Collindale Soft close seat	26.0070	115.00	**141.45**

BIJOU 550MM BASIN



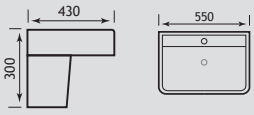

26.0075/26.0084

Description	Code	€ Ex VAT	€ Inc VAT
Bijou 550mm 1TH basin	26.0075	167.00	**205.41**
Bijou 550mm 2TH basin	26.0106	167.00	**205.41**
Bijou Semi pedestal	26.0085	73.00	**89.79**
Bijou Pedestal	26.0077	87.00	**107.01**



BIJOU BACK TO WALL PAN



26.0073

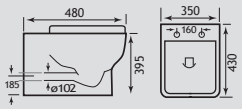

26.0109

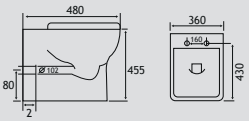

Description	Code	€ Ex VAT	€ Inc VAT
Bijou BTW Pan	26.0073	290.00	**356.70**
Bijou Rimless BTW Pan	26.0084	290.00	**356.70**
Bijou BTW Comfort Height Pan	26.0110	315.00	**387.45**
Bijou Rimless Comfort Height BTW Pan	26.0109	336.00	**413.28**
Bijou/Collindale Soft close seat	26.0070	115.00	**141.45**
Flexible Connector for BTW Pans	2.009	56.00	**68.88**
Vantage Plain Hidden Cistern	17.001	252.00	**309.96**
Vantage Hidden Cistern with Jacket	17.3029	290.00	**356.70**
Eastbrook Jacket Hidden Cistern Bottom Inlet	53.001	157.00	**193.11**

BIJOU 550 SEMI RECESSED 1TH BASIN



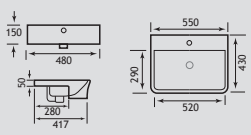

26.0076

Description	Code	€ Ex VAT	€ Inc VAT
Bijou Semi Recessed basin	26.0076	175.00	**215.25**

Cheverney Range



Simplicity and style come together in this modern inexpensive suite.

FEATURES
- **Soft close seat, lifts off for easy cleaning**
- **Soil can be turned left or right on close coupled pan**

CHEVERNEY BTW PAN



Soft Close Seat

Description	Code	€ Ex VAT	€ Inc VAT
Type 55 BTW WC pan	27.0101	195.00	**239.85**
Loire soft close seat	50.002	185.00	**227.55**
Loire Type 55 seat and cover	40.0002	45.00	**55.35**
Rhone soft close seat	40.0001	118.00	**145.14**

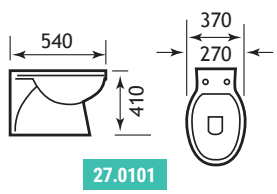

27.0101

CHEVERNEY CC PAN



Soft Close Seat

Description	Code	€ Ex VAT	€ Inc VAT
Cheverney Cistern	75.0022	84.00	**103.32**
Type 55 Pan	75.0020	97.00	**119.31**
Loire Soft Close Seat	50.002	185.00	**227.55**
Loire Seat & Cover	40.0002	45.00	**55.35**
Rhone soft close seat	40.0001	118.00	**145.14**
Jollytronic Universal Bottom Entry Cistern Fitting *	7.0000	189.00	**232.47**

*See rear of Sanitaryware section for Jollytronic.

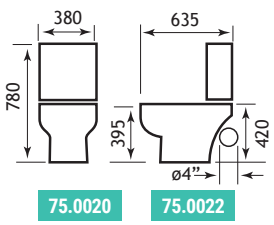

75.0020 75.0022

CHEVERNEY CORNER PAN

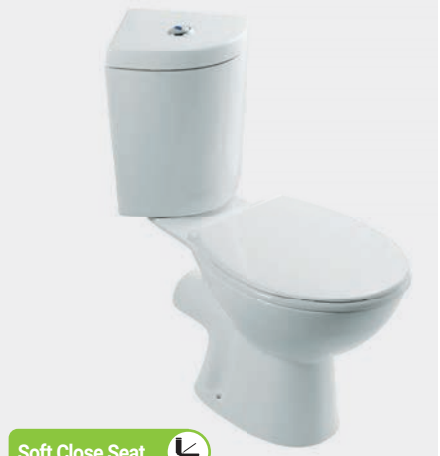

Soft Close Seat

Description	Code	€ Ex VAT	€ Inc VAT
Loire Corner Cistern inc fittings †	75.0011	150.00	**184.50**
Loire Close Coupled Pan	75.0001	142.00	**174.66**
Loire Soft Close Seat	50.002	185.00	**227.55**
Loire Seat & Cover	40.0002	45.00	**55.35**
Rhone Soft Close Seat	40.0001	118.00	**145.14**
Jollytronic Universal Bottom Entry Cistern Fitting *	7.0000	189.00	**232.47**

†Can only be fitted with 75.0001

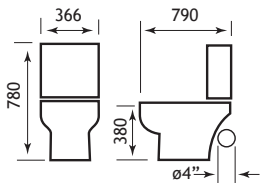

75.0001/11

Cheverney Range

CHEVERNEY CLOAKROOM BASINS



Cheverney Cloakroom Basins - 350 x 250

Description	Code	€ Ex VAT	€ Inc VAT
350 x 250 cloakroom basin 1TH RH	75.0008	83.00	**102.09**
350 x 250 cloakroom basin 2TH	75.0018	83.00	**102.09**

Cheverney Cloakroom Basins - 450 x 275

Description	Code	€ Ex VAT	€ Inc VAT
450 x 275 cloakroom basin 1TH RH	75.0009	86.00	**105.78**
450 x 275 cloakroom basin 2TH	75.0019	86.00	**105.78**

Cheverney Cloakroom Basins - 510 x 240

Description	Code	€ Ex VAT	€ Inc VAT
510x240 cloakroom Basin 2TH	27.0921	49.00	**60.27**

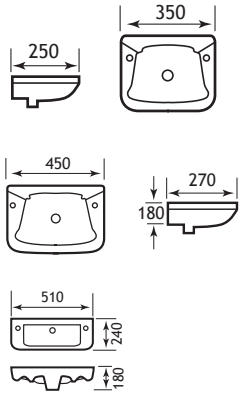

CHEVERNEY SEMI RECESSED BASIN

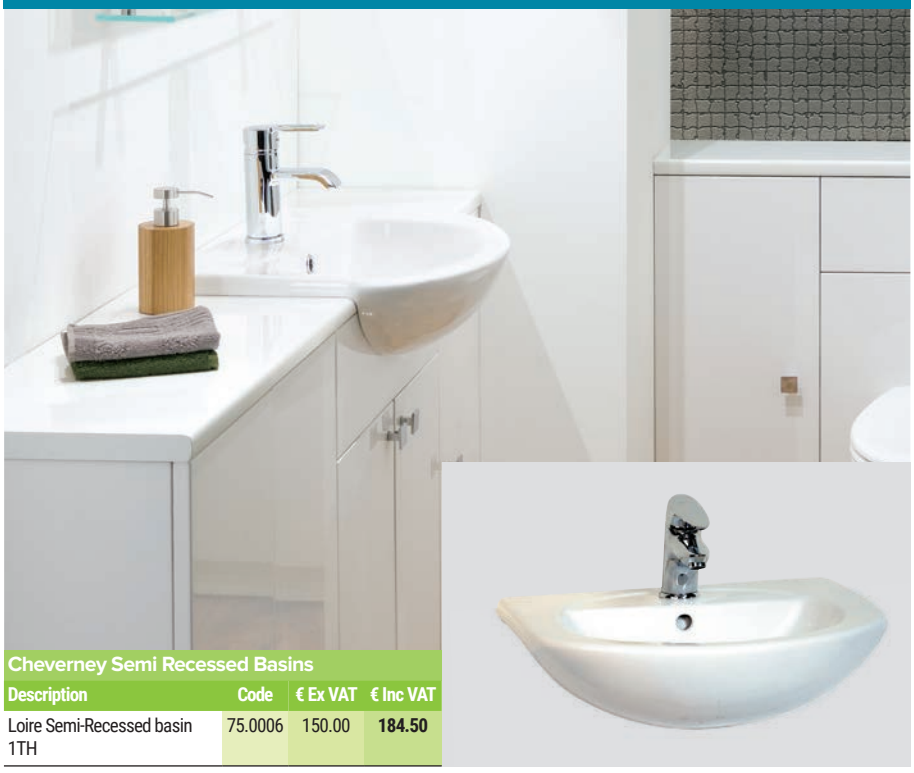

Cheverney Semi Recessed Basins

Description	Code	€ Ex VAT	€ Inc VAT
Loire Semi-Recessed basin 1TH	75.0006	150.00	**184.50**

CHEVERNEY TYPE 55 BASIN



Cheverney Type 55 Basins (535)

Description	Code	€ Ex VAT	€ Inc VAT
Loire 535 Basin 1TH	75.0003	83.00	**102.09**
Loire 535 Basin 2TH	75.0014	83.00	**102.09**
Loire Pedestal	75.0004	58.00	**71.34**
Semi Ped for 75.0003 & 75.0014	75.0025	55.00	**67.65**

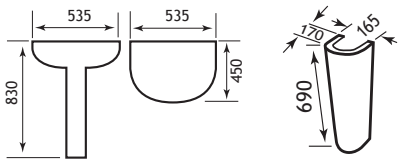

Cheverney Type 55 Basins

Description	Code	€ Ex VAT	€ Inc VAT
Type 55 basin 2TH †	27.0851	44.00	**54.12**
Loire Pedestal	75.0004	58.00	**71.34**

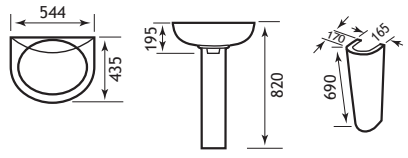

Cheverney Basins Type 55 (450)

Description	Code	€ Ex VAT	€ Inc VAT
Loire 450 Basin 1TH	75.0005	83.00	**102.09**
Loire 450 Basin 2TH	75.0015	83.00	**102.09**
Loire Pedestal	75.0004	58.00	**71.34**

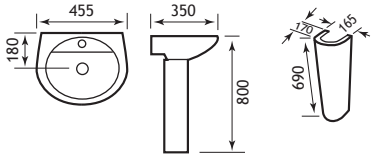

CHEVERNEY CORNER BASIN



Cheverney Corner Basins Type 55 (400)

Description	Code	€ Ex VAT	€ Inc VAT
Loire 400 Corner Basin 1TH	75.0007	115.00	**141.45**
Loire 400 Corner Basin 2TH	75.0017	115.00	**141.45**
Loire Pedestal	75.0004	58.00	**71.34**

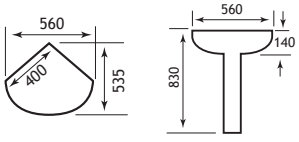



Cheverney Corner Basins Type 55

Description	Code	€ Ex VAT	€ Inc VAT
Type 55 Corner Basin 2TH	27.0941	62.00	**76.26**
Loire Pedestal	75.0004	58.00	**71.34**

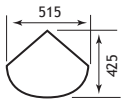

Collindale Range



The Collindale range features a high standard comfort height rimless pans, in which the design is not compromised. It's geometric shapes and simplistic functionality will suite any modern bathroom.

FEATURES
- Rimless Technology
- Soft close seat unclips for cleaning
- Semi recessed basin to match

Complete the LOOK

Complete the look by matching the '**Bijou**' basin range (page 152-153) with the Collindale WC's.

These similar design styles allow contemporary to meet comfort. Pictured above.



COLLINDALE COMFORT BTW PAN

Comfort Height
Soft Close Seat
Rimless Tech



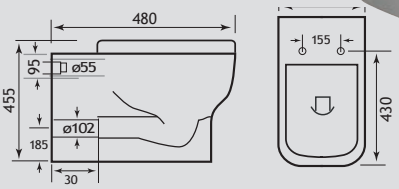

Rimless Requires 4.5 Litre Flush

26.0068

Collindale Comfort Height BTW Pan

Description	Code	€ Ex VAT	€ Inc VAT
Collindale Rimless Comfort Height BTW Pan	26.0068	355.00	**436.65**
Bijou/Collindale Soft Close Seat	26.0070	115.00	**141.45**
Flexible Connector for BTW Pans	2.009	56.00	**68.88**

Bijou & Accessories

Description	Code	€ Ex VAT	€ Inc VAT
Bijou 550mm 1TH basin	26.0075	167.00	**205.41**
Bijou Pedestal	26.0077	87.00	**107.01**
Bijou Semi Recessed basin	26.0076	175.00	**215.25**
Langton 500 x 700 illuminated mirror	56.1073	348.00	**428.04**

Collindale Range



FEATURING
Rimless Technology



EASY CLEAN
Nowhere for germs to hide.

AESTHETICS
Simplistic look.

EFFICIENT
A complete rim flush for effective cleaning.

COLLINDALE COMFORT HEIGHT BTW CC PAN

Comfort Height
Soft Close Seat
Rimless Tech

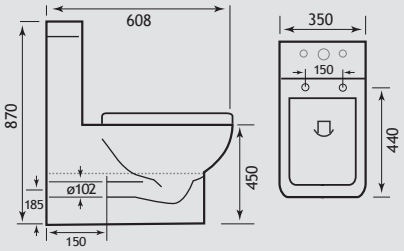



26.0067 26.0069

Description	Code	€ Ex VAT	€ Inc VAT
Collindale Rimless High Level BTW CC Pan	26.0067	355.00	**436.65**
Collindale Cistern	26.0069	139.00	**170.97**
Bijou/Collindale Soft Close Seat	26.0070	115.00	**141.45**
Jollytronic Universal Bottom Entry Cistern fitting *	7.0000	189.00	**232.47**

*See rear of Sanitaryware section for Jollytronic.

COLLINDALE BIDET



Description	Code	€ Ex VAT	€ Inc VAT
Collindale Bidet	26.0103	269.00	**330.87**

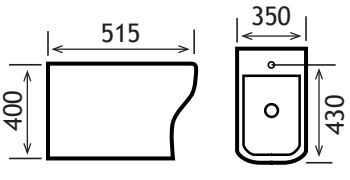

26.0103

Courchevel Range



FEATURES
- Soft close seat, lifts off for easy cleaning
- Soil can be turned left or right on close-coupled pan

COURCHEVEL BTW PAN

Soft Close Seat



Description	Code	€ Ex VAT	€ Inc VAT
Type 55 BTW WC pan	27.0101	195.00	**239.85**
Loire soft close seat	50.002	185.00	**227.55**
Loire Type 55 seat and cover	40.0002	45.00	**55.35**
Rhone soft close seat	40.0001	118.00	**145.14**

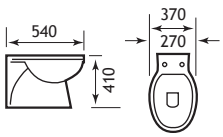

27.0101

COURCHEVEL CC PAN

Soft Close Seat



Description	Code	€ Ex VAT	€ Inc VAT
Courchevel Cistern	75.0023	57.00	**68.40**
Type 55 Pan	75.0020	97.00	**119.31**
Loire Soft Close Seat	50.002	185.00	**227.55**
Loire Seat & Cover	40.0002	45.00	**55.35**
Rhone soft close seat	40.0001	118.00	**145.14**
Jollytronic Universal Bottom Entry Cistern Fitting *	7.0000	189.00	**232.47**

*See rear of Sanitaryware section for Jollytronic.

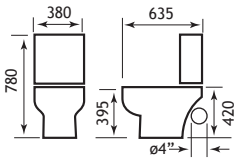

*Soil can be turned left or right

75.0023 75.0020

COURCHEVEL CORNER PAN

Soft Close Seat



Description	Code	€ Ex VAT	€ Inc VAT
Loire Corner Cistern inc fittings †	75.0011	150.00	**184.50**
Loire Close Coupled Pan	75.0001	142.00	**174.66**
Loire Soft Close Seat	50.002	185.00	**227.55**
Loire Seat & Cover	40.0002	45.00	**55.35**
Rhone Soft Close Seat	40.0001	118.00	**145.14**
Jollytronic Universal Bottom Entry Cistern Fitting *	7.0000	189.00	**232.47**

†Can only be fitted with 75.0001

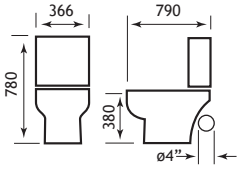

*Soil can be turned left or right

75.0011 75.0001

Courchevel Range

COURCHEVEL CLOAKROOM BASINS

A versatile range with a variety of products available. A modern and affordable suite, a welcome addition to any bathroom..



Courchevel Cloakroom Basins - 350 x 250

Description	Code	€ Ex VAT	€ Inc VAT
350 x 250 cloakroom basin 1TH RH	75.0008	83.00	**102.09**
350 x 250 cloakroom basin 2TH	75.0018	83.00	**102.09**

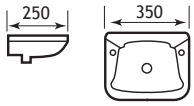

Courchevel Cloakroom Basins - 450 x 275

Description	Code	€ Ex VAT	€ Inc VAT
450 x 275 cloakroom basin 1TH RH	75.0009	86.00	**105.78**
450 x 275 cloakroom basin 2TH	75.0019	86.00	**105.78**

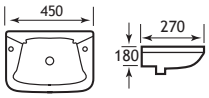

Courchevel Cloakroom Basins - 510 x 240

Description	Code	€ Ex VAT	€ Inc VAT
510x240 cloakroom Basin 2TH	27.0921	49.00	**60.27**

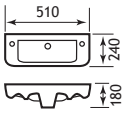

COURCHEVEL SEMI RECESSED



Courchevel Semi Recessed Basins

Description	Code	€ Ex VAT	€ Inc VAT
Loire Semi-Recessed basin 1TH	75.0006	150.00	**184.50**

Cut out 260mm

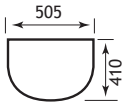

COURCHEVEL TYPE 55 BASINS



Courchevel Type 55 Basins (535)

Description	Code	€ Ex VAT	€ Inc VAT
Loire 535 Basin 1TH	75.0003	83.00	**102.09**
Loire 535 Basin 2TH	75.0014	83.00	**102.09**
Loire Pedestal	75.0004	58.00	**71.34**
Semi Ped for 75.0003 & 75.0014	75.0025	55.00	**67.65**

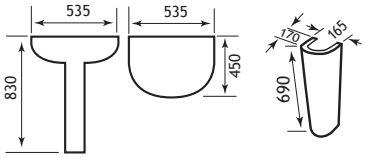

COURCHEVEL CORNER BASINS



Courchevel Corner Basins Type 55 (400)

Description	Code	€ Ex VAT	€ Inc VAT
Loire 400 Corner Basin 1TH	75.0007	115.00	**141.45**
Loire 400 Corner Basin 2TH	75.0017	115.00	**141.45**
Loire Pedestal	75.0004	58.00	**71.34**

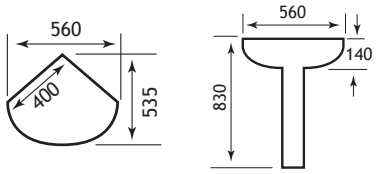



Courchevel Type 55 Basins

Description	Code	€ Ex VAT	€ Inc VAT
Type 55 basin 2TH †	27.0851	44.00	**54.12**
Loire Pedestal	75.0004	58.00	**71.34**

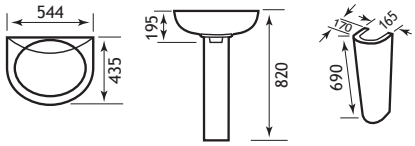

Courchevel Corner Basins Type 55

Description	Code	€ Ex VAT	€ Inc VAT
Type 55 Corner Basin 2TH	27.0941	62.00	**76.26**
Loire Pedestal	75.0004	58.00	**71.34**

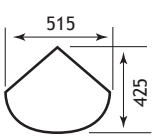

Crowthorne Range







Crowthorne Range



CROWTHORNE

A fusion of a modern shaped basin and a more traditional pan to add flair to any bathroom.

FEATURES
- Soft close seat unclips for cleaning
- Semi recessed basin to match

CROWTHORNE 500 1TH



Description	Code	€ Ex VAT	€ Inc VAT
Crowthorne Basin 500mm 1TH	26.0029	167.00	**205.41**
Crowthorne Semi Pedestal	26.0030	84.00	**103.32**

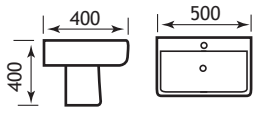

26.0030 26.0029

CROWTHORNE 560 1TH



Description	Code	€ Ex VAT	€ Inc VAT
Crowthorne Basin 560mm 1TH	26.0027	180.00	**221.40**
Crowthorne Semi Pedestal	26.0030	84.00	**103.32**

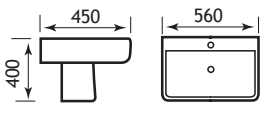

26.0030 26.0027

CROWTHORNE 500 1TH



Description	Code	€ Ex VAT	€ Inc VAT
Crowthorne Basin 500mm 1TH	26.0029	167.00	**205.41**
Crowthorne Pedestal	26.0028	93.00	**114.39**

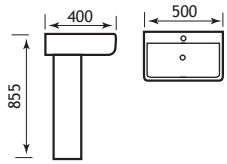

26.0028 26.0029

CROWTHORNE 560 1TH



Description	Code	€ Ex VAT	€ Inc VAT
Crowthorne Basin 560mm 1TH	26.0027	180.00	**221.40**
Crowthorne Pedestal	26.0028	93.00	**114.39**

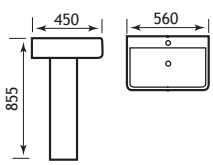

26.0028 26.0027

Soft Close Seat

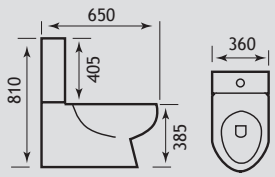

26.0031

Description	Code	€ Ex VAT	€ Inc VAT
Crowthorne WC Pan	26.0031	185.00	**227.55**
Crowthorne Cistern inc Fittings	26.0032	136.00	**167.28**
Crowthorne Soft Close Seat	26.0033	119.00	**146.37**
Jollytronic Universal Bottom Entry Cistern fitting	7.0000	189.00	**232.47**

Doc M Pack

Items included in the Doc M pack are: + Pan + Cistern (inc fittings) + Seat ring + 4 x grab rails + 1 x swing arm + Toilet roll holder + Basin + Basin hangers + Tap + Grated waste + Bottle trap

CLOSE COUPLED DOC M PACK



Close Coupled Doc M Pack - White

Description	Code	€ Ex VAT	€ Inc VAT
Close coupled Doc M packs	27.0111	951.00	**1169.73**

Close Coupled Doc M Pack - White With Stainless Steel Grips

Description	Code	€ Ex VAT	€ Inc VAT
Close coupled Doc M packs	27.0139	1105.00	**1359.15**



Close Coupled Doc M Pack - White With Blue Grips

Description	Code	€ Ex VAT	€ Inc VAT
Close coupled Doc M packs	27.0131	1000.00	**1230.00**



Doc M Pack



Low Level Doc M Pack With White Grips

Description	Code	€ Ex VAT	€ Inc VAT
Low level Doc M packs	27.0121	1048.00	**1289.04**



Low Level Doc M Pack With Blue Grips

Description	Code	€ Ex VAT	€ Inc VAT
Low level Doc M packs	27.0125	1000.00	**1230.00**

DOC M PACK ACCESSORIES

The below codes are for individual sale only. They will differ from the items that come as part of the Doc M packs.

Individual Accessory Prices

Description	Colour	Code	€ Ex VAT	€ Inc VAT
Grab Rails 600mm (5 pack)	White	40.0191	178.00	**218.94**
Grab Rails 600mm (5 pack)	Blue	40.0195	178.00	**218.94**
Grab Rails 600mm (5 pack)	S. Steel	40.0199	301.00	**370.23**
Tap from Doc M Pack	Chrome	40.0181	236.00	**290.28**
Padded Back Rest	White	40.0211	118.00	**145.14**
'Doc M' Low Level padded back rest	Blue	40.0215	118.00	**145.14**
Padded Back Rest	S. Steel	40.0219	199.00	**244.77**

Individual Sanitaryware

Description	Colour	Code	€ Ex VAT	€ Inc VAT
Basin from Doc M pack 1TH no overflow	White	27.0171	195.00	**239.85**
Jollytronic universal bottom entry cistern fitting		7.0000	189.00	**232.47**

Grab Rails And Swing Arms

Description	Colour	Code	€ Ex VAT	€ Inc VAT
300mm Grab Rail	White	40.0221	34.00	**41.82**
300mm Grab Rail	Blue	40.0225	34.00	**41.82**
300mm Grab rail	S. Steel	40.0229	55.00	**67.65**
450mm Grab Rail	White	40.0231	41.00	**50.43**
450mm Grab Rail	Blue	40.0235	41.00	**50.43**
450mm Grab rail	S. Steel	40.0239	65.00	**79.95**
600mm Grab rail	White	40.0241	56.00	**68.88**
600mm Grab Rail	Blue	40.0245	56.00	**68.88**
600mm Grab rail	S. Steel	40.0249	90.00	**110.70**
Swing Arm	White	40.0251	152.00	**186.96**
Swing Arm	Blue	40.0256	152.00	**186.96**
Swing Arm	S. Steel	40.0259	254.00	**312.42**

Seats

Description	Code	€ Ex VAT	€ Inc VAT
Loire/Arkitect Deluxe Seat	50.001	70.00	**86.10**
Loire Soft Close Seat	50.002	185.00	**227.55**
Loire Seat & Cover	40.0002	45.00	**55.35**
Rhone Soft Close Seat	40.0001	118.00	**145.14**
Seat ring from Doc M pack White	40.0161	41.00	**50.43**
Seat ring from Doc M pack Blue	40.0165	55.00	**67.65**



Grab rail pack consists of five hand rails. Swing arm is separate.

The Doc M pack includes 4 grab rails and one swing arm



*During the life of this Brochure, all grab rails maybe supplied with either concealed or exposed back plates.

Dura Range

DURA BASINS



The Dura suite is a fusion - having a modern design whilst still retaining some features of the more traditional suite.

FEATURES
- **Multiple basin options**
- **All basins match any Dura toilet pans**

DURA BASIN 500 & 550 1TH

Description	Code	€ Ex VAT	€ Inc VAT
Dura Basin 500mm 1TH inc fixings	26.0003	108.00	**132.84**
Dura Basin 550mm 1TH inc fixings	26.0001	115.00	**141.45**
Dura Pedestal	26.0002	76.00	**93.48**

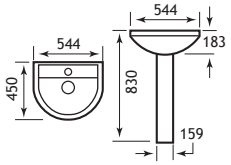

26.0001

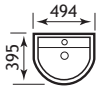

26.0003

DURA BASIN 2TH 500



Description	Code	€ Ex VAT	€ Inc VAT
Basin 500mm 2TH inc Fixings	26.0025	108.00	**132.84**
Dura Pedestal	26.0002	76.00	**93.48**

Dura Range

DURA BASIN 450



Description	Code	€ Ex VAT	€ Inc VAT
Dura Basin 450mm 1TH inc fixings	26.0005	87.00	**107.01**
Dura Basin 450mm 2TH inc fixings	26.0026	96.00	**118.08**
Dura Semi Pedestal inc fixings	26.0004	70.00	**86.10**
Dura Pedestal	26.0002	76.00	**93.48**

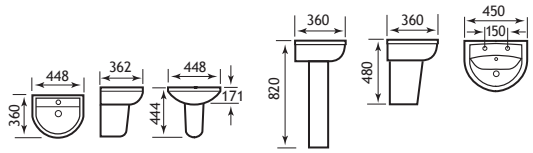

26.0005 | 26.0004/5 | 26.0002/26 | 26.0004/26 | 26.0026



DURA CORNER BASIN 460



Description	Code	€ Ex VAT	€ Inc VAT
Dura Corner Basin 460mm 1TH inc fixings	26.0013	96.00	**118.08**
Dura Pedestal	26.0002	76.00	**93.48**

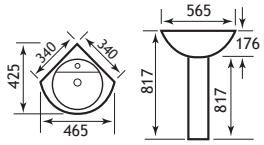

26.0013

DURA CLOAKROOM BASIN 2TH



Description	Code	€ Ex VAT	€ Inc VAT
Dura Cloakroom Basin 360mm 1TH	26.0180	77.00	**94.71**
Dura Cloakroom Basin 450mm 1TH	26.0181	87.00	**107.01**
Dura Cloakroom Basin 450mm 2TH inc fixings	26.0012	87.00	**107.01**
Dura Cloakroom Basin 360mm 2TH	26.0011	77.00	**94.71**

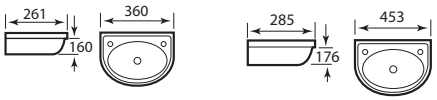

26.0011 | 26.0012

DURA SEMI RECESSED BASIN 1TH





Description	Code	€ Ex VAT	€ Inc VAT
Dura Semi recessed basin 1TH	26.0009	105.00	**129.15**

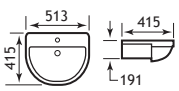

26.0009 | Cut out 260mm

Dura Range

DURA PANS



The Dura suite is a fusion - having a modern design whilst still retaining some features of the more traditional suite.

FEATURES
- **Soft close seat, comfort height & rimless options**
- **Top fix seat**

DURA COMFORT HEIGHT BTW CC PAN



Description	Code	€ Ex VAT	€ Inc VAT
Dura Comfort Height BTW CC Pan	26.0043	301.00	**370.23**
Dura Comfort Height BTW CC Rimeless Pan	26.0133	301.00	**370.23**
Dura Cistern inc fittings	26.0007	115.00	**141.45**
Dura Deluxe Soft Close Seat	26.0015	103.00	**126.69**
Jollytronic universal bottom entry cistern fitting	7.0000	189.00	**232.47**

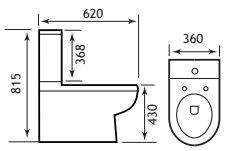

DURA COMFORT HEIGHT CC PAN



Description	Code	€ Ex VAT	€ Inc VAT
Dura Comfort Height CC Pan *	26.0046	273.00	**335.79**
Dura Comfort Height Rimless CC Pan**	26.0131	273.00	**335.79**
Dura Cistern inc fittings	26.0007	115.00	**141.45**
Dura Economy Seat	26.0014	52.00	**63.96**
Dura Deluxe Soft Close Seat	26.0015	103.00	**126.69**
Dura Deluxe Seat	50.011	58.00	**71.34**
Jollytronic cistern fitting	7.0000	189.00	**232.47**

*Soil can be turned left or right at the back of the pan

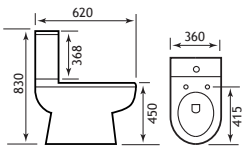

DURA PAN



Description	Code	€ Ex VAT	€ Inc VAT
Dura Pan inc fixings *	26.0006	160.00	**196.80**
Dura Rimless Pan	26.0130	201.00	**247.23**
Dura Cistern inc fittings	26.0007	115.00	**141.45**
Dura Economy Seat	26.0014	52.00	**63.96**
Dura Deluxe Soft Close Seat	26.0015	103.00	**126.69**
Dura Deluxe Seat	50.011	58.00	**71.34**
Jollytronic universal bottom entry cistern fitting	7.0000	189.00	**232.47**

*Soil can be turned left or right at the back of the pan

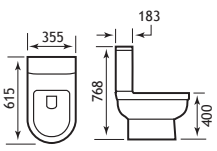

Dura Range

DURA BTW PAN

Soft Close Seat

Rimless Tech



Description	Code	€ Ex VAT	€ Inc VAT
Dura BTW Pan inc fixings *	26.0008	167.00	**205.41**
Dura BTW Rimless Pan**	26.0132	203.00	**249.69**
Dura Deluxe Soft Close Seat	26.0015	103.00	**126.69**
Flexible WC Connector BTW Pans	2.009	56.00	**68.88**

*BTW can only be fitted with soft close seat.

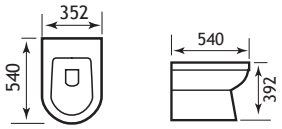

DURA COMFORT HEIGHT BTW

Comfort Height

Rimless Tech



Description	Code	€ Ex VAT	€ Inc VAT
Dura Comfort Height BTW Pan	26.0047	273.00	**335.79**
Dura Comfort Height BTW Rimless Pan**	26.0134	280.00	**344.40**
Dura Deluxe Soft Close Seat	26.0015	103.00	**126.69**
Flexible WC Connector BTW Pans	2.009	56.00	**68.88**

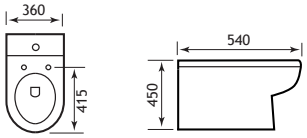

DURA WALL HUNG

Soft Close Seat



Description	Code	€ Ex VAT	€ Inc VAT
Dura Wall Hung Pan	26.0048	278.00	**341.94**
Dura Deluxe Soft Close Seat	26.0015	103.00	**126.69**
Dura Deluxe Seat	50.011	58.00	**71.34**

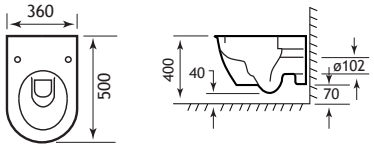

DURA BTW CC PAN

Soft Close Seat



Description	Code	€ Ex VAT	€ Inc VAT
Dura BTW CC Pan	26.0049	240.00	**295.20**
Dura Cistern inc fittings	26.0007	115.00	**141.45**
Dura Deluxe Soft Close Seat	26.0015	103.00	**126.69**
Jollytronic universal bottom entry cistern fitting	7.0000	189.00	**232.47**

DURA BTW PAN WITH CUT OUT

26.0050

Left hand view



26.0050



Left hand soil exit shown

26.0050

Right hand view



Description	Code	€ Ex VAT	€ Inc VAT
Dura BTW CC Pan LH Exit*	26.0050	240.00	**295.20**
Dura BTW CC Pan RH Exit*	26.0051	240.00	**295.20**
Dura Cistern inc fittings	26.0007	115.00	**141.45**
Dura Deluxe Soft Close Seat	26.0015	103.00	**126.69**

*Pipework needs to be floor level.

Left hand soil shown

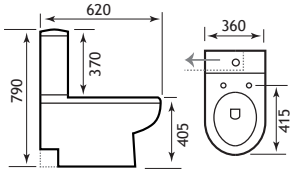

*Soil exit is either left or right hand, ensure correct configuration when ordering.

FEATURING Rimless Technology



EASY CLEAN - Nowhere for germs to hide.
AESTHETICS - Simplistic look.
EFFICIENT - A complete rim flush for effective cleaning.

Water Saving Tech

Rimless Tech

Farringdon Range

FARRINGDON



The Farringdon range features soft curves and sweeping edges, perfect for any modern day bathroom. The versatile range includes a comfort height, rimless pan.

FEATURES
- Rimless Technology
- Top fix seat
- Soft close seat lifts off for easy cleaning
- Short projection
- Cloakroom basin or full pedestal
- Entire range is comfort height seating level

FARRINGDON BASINS



Farringdon/Northall 450MM 1TH Basin

Description	Code	€ Ex VAT	€ Inc VAT
Farringdon/Northall 450mm 1TH basin	26.0064	103.00	**126.69**
Farringdon/Northall Semi ped	26.0065	87.00	**107.01**

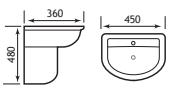

Farringdon/Northall 500MM 1TH Basin

Description	Code	€ Ex VAT	€ Inc VAT
Farringdon/Northall 500mm 1TH basin	26.0066	135.00	**166.05**
Farringdon/Northall Semi ped	26.0065	87.00	**107.01**

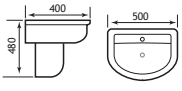

Farringdon/Northall 550MM 1TH Basin

Description	Code	€ Ex VAT	€ Inc VAT
Farringdon/Northall 550mm 1TH basin	26.0062	143.00	**175.89**
Farringdon/Northall Semi ped	26.0065	87.00	**107.01**

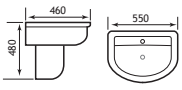

FEATURING
Rimless Technology



EASY CLEAN
Nowhere for germs to hide.

AESTHETICS
Simplistic look.

EFFICIENT
A complete rim flush for effective cleaning.

Farringdon Range

FARRINGDON CC PAN



*Soil can be turned left or right at the back of the pan



Rimless Tech

Soft Close Seat

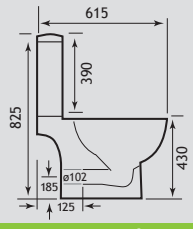

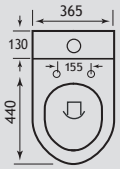

Description	Code	€ Ex VAT	€ Inc VAT
Farringdon CC Pan*	26.0059	297.00	**365.31**
Farringdon Rimless CC Pan	26.0080	297.00	**365.31**
Farringdon Cistern	26.0061	139.00	**170.97**
Northall/Farringdon Wrap Over Soft Close Seat	26.0056	104.00	**127.92**
Jollytronic universal bottom entry cistern fitting	7.0000	189.00	**232.47**

FARRINGDON WALL HUNG PAN



Rimless Tech

Soft Close Seat

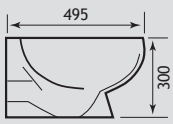



Description	Code	€ Ex VAT	€ Inc VAT
Farringdon Rimless Wall Hung Pan*	26.0081	313.00	**384.99**
Farringdon/Cheltenham Seat	50.008	181.00	**222.63**

FARRINGDON BTW CC PAN



Rimless Tech

Soft Close Seat

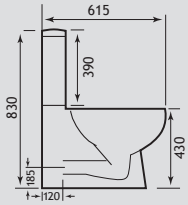

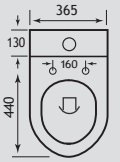

Description	Code	€ Ex VAT	€ Inc VAT
Farringdon BTW CC Pan	26.0057	297.00	**365.31**
Farringdon Rimless BTW CC Pan	26.0078	313.00	**384.99**
Farringdon Cistern	26.0061	139.00	**170.97**
Northall/Farringdon Wrap Over Soft Close Seat	26.0056	104.00	**127.92**
Jollytronic universal bottom entry cistern fitting	7.0000	189.00	**232.47**

FARRINGDON BTW PAN



Rimless Tech

Soft Close Seat

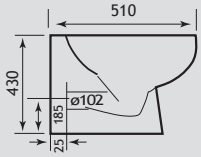

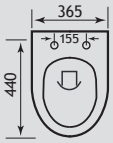

Description	Code	€ Ex VAT	€ Inc VAT
Farringdon BTW pan	26.0058	297.00	**365.31**
Farringdon Rimless BTW Pan	26.0079	297.00	**365.31**
Farringdon/Cheltenham Seat	50.008	181.00	**222.63**
Flexible WC Connector for BTW Pans	2.009	56.00	**68.88**

*Can be fitted with a 26.0042 soft close seat as an alternative, see page 274.

FARRINGDON BASINS



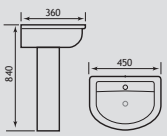

26.0064/26.0063

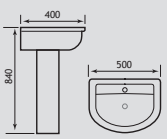

26.0066/26.0063

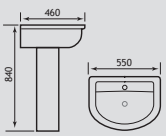

26.0062/26.0063

Farringdon/Northall 450MM 1TH Basin

Description	Code	€ Ex VAT	€ Inc VAT
Farringdon 450mm 1TH basin	26.0064	103.00	**126.69**
Farringdon Pedestal	26.0063	93.00	**114.39**

Farringdon/Northall 500MM 1TH Basin

Description	Code	€ Ex VAT	€ Inc VAT
Farringdon 500mm 1TH basin	26.0066	135.00	**166.05**
Farringdon Pedestal	26.0063	93.00	**114.39**

Farringdon/Northall 550MM 1TH Basin

Description	Code	€ Ex VAT	€ Inc VAT
Farringdon/Northall 550mm 1TH basin	26.0062	143.00	**175.89**

Kenley Range

KENLEY



The Kenley range features soft curves and clean vertical sides, perfect for any modern day bathroom.The versatile range includes a comfort height and rimless pan.

FEATURES
- Rimless Technology
- Top fix seat
- Soft close seat lifts off for easy cleaning
- Short projection
- Cloakroom basin or full pedestal
- Entire range is comfort height seating level



FEATURING
Rimless Technology

EASY CLEAN
Nowhere for germs to hide.

AESTHETICS
Simplistic look.

EFFICIENT
A complete rim flush for effective cleaning.

Kenley Range

KENLEY 500 BASIN & PEDESTAL



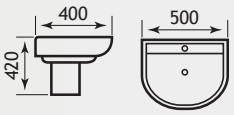

Description	Code	€ Ex VAT	€ Inc VAT
Kenley 500mm basin 1TH	26.0172	129.00	**158.67**
Kenley Semi ped	26.0174	66.00	**81.18**
Kenley Pedestal	26.0173	73.00	**89.79**

KENLEY 550 BASIN & PEDESTAL



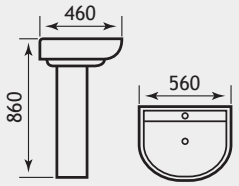

Description	Code	€ Ex VAT	€ Inc VAT
Kenley 550mm basin 1TH	26.0171	143.00	**175.89**
Kenley Semi ped	26.0174	66.00	**81.18**
Kenley Pedestal	26.0173	73.00	**89.79**

KENLEY BTW CC PAN



Soft Close Seat

Rimless Tech

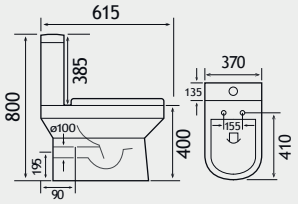

Description	Code	€ Ex VAT	€ Inc VAT
Kenley BTW CC Pan	26.0163	254.00	**312.42**
Kenley BTW CC Rimless Pan	26.0164	269.00	**330.87**
Kenley Cistern	26.0167	129.00	**158.67**
Kenley Soft Close Seat	26.0170	103.00	**126.69**

KENLEY CC COMFORT HEIGHT PAN



Soft Close Seat

Rimless Tech

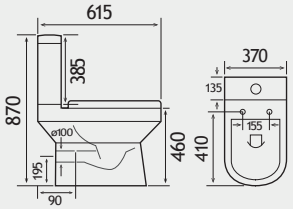

Description	Code	€ Ex VAT	€ Inc VAT
Kenley Comfort Height CC Pan	26.0165	276.00	**339.48**
Kenley Comfort Height Rimless CC Pan	26.0166	297.00	**365.31**
Kenley Soft Close Seat	26.0170	103.00	**126.69**
Kenley Cistern	26.0167	129.00	**158.67**

KENLEY BTW PAN



Soft Close Seat

Rimless Tech

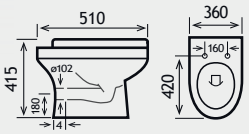

Description	Code	€ Ex VAT	€ Inc VAT
Kenley BTW Pan	26.0168	192.00	**236.16**
Kenley Rimless BTW Pan	26.0169	208.00	**255.84**
Kenley Soft Close Seat	26.0170	103.00	**126.69**

KENLEY BTW COMFORT HEIGHT



Soft Close Seat

Rimless Tech

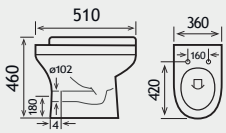

Description	Code	€ Ex VAT	€ Inc VAT
Kenley Comfort Height BTW Pan	26.0175	282.00	**346.86**
Kenley Comfort Height BTW Rimless Pan	26.0176	297.00	**365.31**
Kenley Soft Close Seat	26.0170	103.00	**126.69**

Kompact Range

KOMPACT

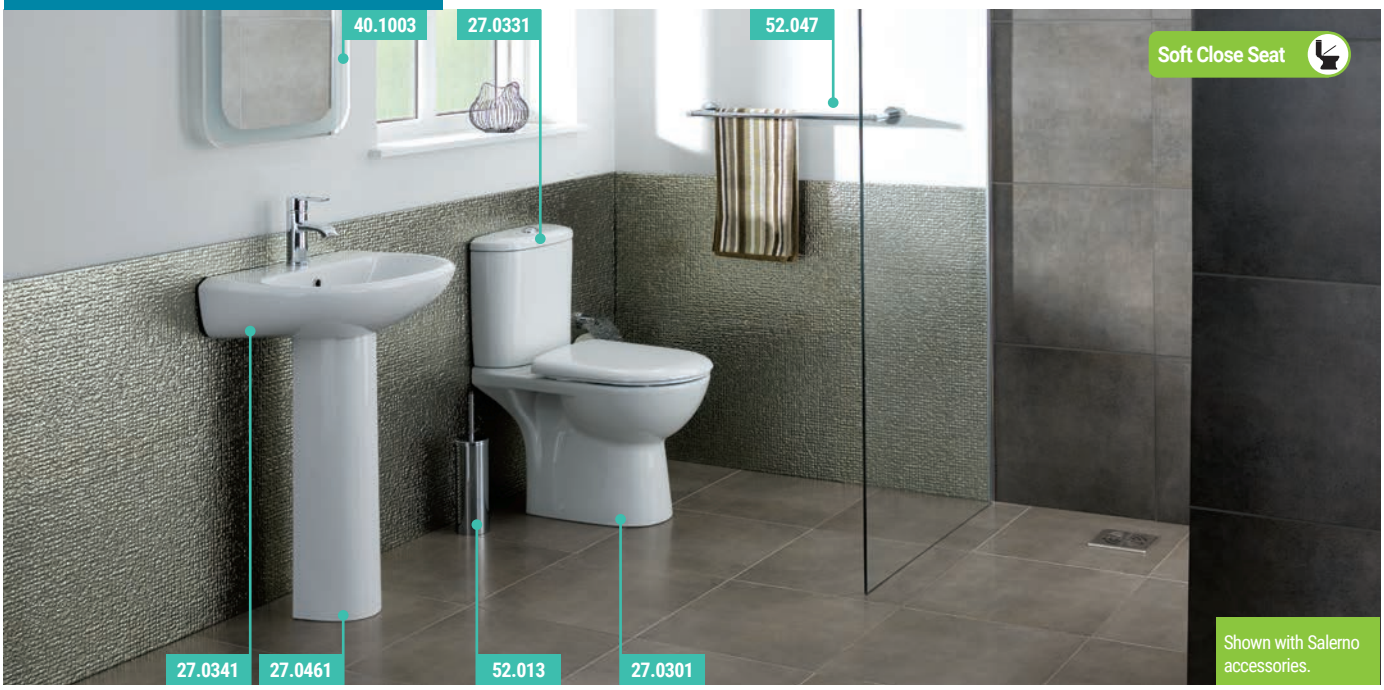

Where space is a major concern, Kompact comes into its own. The WC pan and cistern project just 610mm.

Kompact WC

Description	Code	€ Ex VAT	€ Inc VAT
Kompact WC pan	27.0301	297.00	**365.31**
Kompact cistern inc fittings	27.0331	161.00	**198.03**
Temptation/Kompact seat	21.1141	103.00	**126.69**
Temptation/Kompact soft close seat	21.1151	212.00	**260.76**
Jollytronic universal bottom entry cistern fitting**	7.0000	189.00	**232.47**

Soil can be turned left or right at back of pan.
**For more information see page 201.

FEATURES
- Soft close seat, lifts off for easy cleaning
- Soil can be turned left or right

KOMPACT IN A BOX

'Kompact in a box' includes everything you need for the WC:





* Kompact pan
* Kompact cistern complete with fittings and push button
* Soft close white seat

Simply bolt together

Nothing could be easier

Kompact

Description	Code	€ Ex VAT	€ Inc VAT
Kompact in a box	99.016	580.00	**713.40**

KOMPACT 550 BASIN



Kompact Basins

Description	Code	€ Ex VAT	€ Inc VAT
Kompact 550mm basin 1TH	27.0341	174.00	**214.02**
Kompact/Temptation pedestal	27.0461	42.00	**51.66**

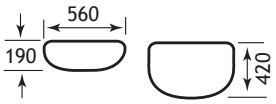

Extras

Description	Code	€ Ex VAT	€ Inc VAT
Treviso 500x700mm Blue LED Portrait Mirror	40.1003	345.00	**424.35**
Hooper mono basin c/w clicker waste	56.2045	194.00	**238.62**

Kompact Range



KOMPACT BASIN

Can be fitted on a full pedestal.



Kompact Basin

Description	Code	€ Ex VAT	€ Inc VAT
Kompact Basin 457mm 1TH	27.0401	122.00	**150.06**
Kompact/Temptation pedestal	27.0461	42.00	**51.66**

KOMPACT CLOAKROOM BASIN



Kompact Cloakroom Basin

Description	Code	€ Ex VAT	€ Inc VAT
Kompact cloakroom basin 419 x 216 1TH	27.0381	96.00	**118.08**

KOMPACT CLOAKROOM BASIN



Kompact Cloakroom Basin

Description	Code	€ Ex VAT	€ Inc VAT
Cloakroom basin 509 x 216 1TH	27.0391	103.00	**126.69**

Kompact Range

KOMPACT



Where space is a major concern, Kompact comes into its own. The WC pan and cistern project just 610mm, the corner cistern and pan project 805mm. The corner cistern and neat basins make the range extremely versatile in confined areas such as cloakrooms and en-suites..

FEATURES
- **Soft close seat, lifts off for easy cleaning**
- **Soil can be turned left or right**
- **Top fix seat**

KOMPACT CORNER BASIN



Description	Code	€ Ex VAT	€ Inc VAT
Corner cloakroom basin 1TH	27.0371	145.00	**178.35**

KOMPACT WC



*Soil can be turned left or right at the back of the pan

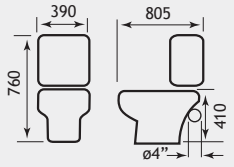

27.0301 & 27.0311

Kompact WC

Description	Code	€ Ex VAT	€ Inc VAT
Kompact WC pan	27.0301	297.00	**365.31**
Kompact corner cistern inc fittings	27.0311	224.00	**275.52**
Temptation/Kompact seat White	21.1141	103.00	**126.69**
Temptation/Kompact soft close seat White	21.1151	212.00	**260.76**
Jollytronic universal bottom entry cistern fitting*	7.0000	189.00	**232.47**

Soil can be turned left or right at back of pan.
**For more information see page 201.

Kompact Range



KOMPACT BTW



27.0321 & 21.1141

Kompact BTW

Description	Code	€ Ex VAT	€ Inc VAT
Kompact BTW pan	27.0321	238.00	**292.74**
Temptation/Kompact seat White	21.1141	103.00	**126.69**
Temptation/Kompact soft close seat White	21.1151	212.00	**260.76**

BTW Pan extras

Description	Code	€ Ex VAT	€ Inc VAT
Vantage plain hidden cistern CP push button	17.001	252.00	**309.96**
Vantage Hidden Cistern with Jacket	17.3029	290.00	**356.70**
Eastbrook jacket hidden cistern - bottom inlet	53.001	157.00	**193.11**
Flexible WC Connector for BTW Pans	2.009	56.00	**68.88**

*Pan connector 2.009 is recommended for use with our BTW pans.

FEATURES - VANTAGE CISTERN
- WRAS approved flushing components
- Delay fill inlet valve - no water waste

KOMPACT SEMI RECESSED BASIN



27.0361

Kompact Semi Recessed Basin

Description	Code	€ Ex VAT	€ Inc VAT
Kompact reduced depth SR basin 1TH	27.0361	168.00	**206.64**
Kompact reduced depth SR basin 2TH	27.9361	168.00	**206.64**

Cut out 215mm

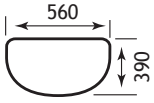

27.0361/27.9361

Oslo Semi Recessed Slimline Furniture

Description	Code	€ Ex VAT	€ Inc VAT
Oslo Slimline Basin Unit	1.051	413.00	**507.99**
Oslo 50 WC unit only	1.287	457.00	**562.11**
Oslo WC unit plinth	1.288	26.00	**31.98**
Laminate Tops Gloss 1200 x 310mm	28.009	118.00	**145.14**
Bonito 60cm plinth	1.037	31.00	**38.13**

Loire Range

LOIRE



Loire personifies modern French design and blends beautifully into most modern and contemporary bathroom settings. Its slender, smooth curves emphasise the style and panache of this well-priced suite.

FEATURES
- **Soft close seat, lifts off for easy cleaning**
- **Soil can be turned left or right**

LOIRE WC

Description	Code	€ Ex VAT	€ Inc VAT
Loire close coupled WC pan	75.0001	142.00	**174.66**
Loire/Anjou close coupled cistern inc fittings	75.0002	112.00	**137.76**
Loire/Arkitect deluxe seat	50.001	70.00	**86.10**
Loire soft close seat	50.002	185.00	**227.55**
Loire Seat & Cover	40.0002	45.00	**55.35**
Rhone soft close seat	40.0001	118.00	**145.14**
Jollytronic universal bottom entry cistern fitting	7.0000	189.00	**232.47**

*See rear of Sanitaryware section for Jollytronic.

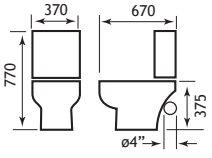

75.0001/2

*Soil can be turned left or right at the back of the pan

LOIRE IN A BOX

Simply bolt together.





Includes:
- **Loire pan**
- **Loire cistern complete with fittings and push button**
- **Standard white seat**

99.017

Description	Code	€ Ex VAT	€ Inc VAT
Loire in a box	99.017	278.00	**341.94**

Loire Range

LOIRE BASINS



75.0003

Loire 535 Basins

Description	Code	€ Ex VAT	€ Inc VAT
Loire 535 basin 1TH	75.0003	83.00	**102.09**
Loire 535 basin 2TH	75.0014	83.00	**102.09**
Loire Semi Ped for 75.0003 & 75.0014	75.0025	55.00	**67.65**
Loire pedestal	75.0004	58.00	**71.34**

Loire 450 Basins

Description	Code	€ Ex VAT	€ Inc VAT
Loire 450 basin 1TH	75.0005	83.00	**102.09**
Loire 450 basin 2TH	75.0015	83.00	**102.09**
Loire pedestal	75.0004	58.00	**71.34**
Jollytronic Universal Bottom Entry Cistern Fitting*	7.0000	189.00	**232.47**

*See rear of Sanitaryware section for Jollytronic.

Extras

Description	Code	€ Ex VAT	€ Inc VAT
Genoa single towel rail	52.009	62.00	**76.26**
Genoa glass shelf with barrier	52.008	58.00	**71.34**
Langton 500x700 mirror	56.1073	348.00	**428.04**

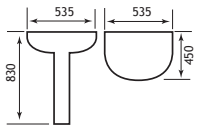

75.0004 & 75.0013/14

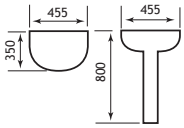

75.0004 & 75.0005/15



LOIRE CLOAKROOM 450 BASIN



75.0009 & 75.0019

LOIRE CLOAKROOM 450 BASINS

Description	Code	€ Ex VAT	€ Inc VAT
Loire 450 x 275 cloakroom basin 1TH RH	75.0009	86.00	**105.78**
Loire 450 x 275 cloakroom basin 2TH	75.0019	86.00	**105.78**

LOIRE CLOAKROOM 350 BASIN



75.0008 & 75.0018

LOIRE CLOAKROOM 350 BASINS

Description	Code	€ Ex VAT	€ Inc VAT
Loire 350 x 250 cloakroom basin 1TH RH	75.0008	83.00	**102.09**
Loire 350 x 250 cloakroom basin 2TH	75.0018	83.00	**102.09**

Loire Range

LOIRE

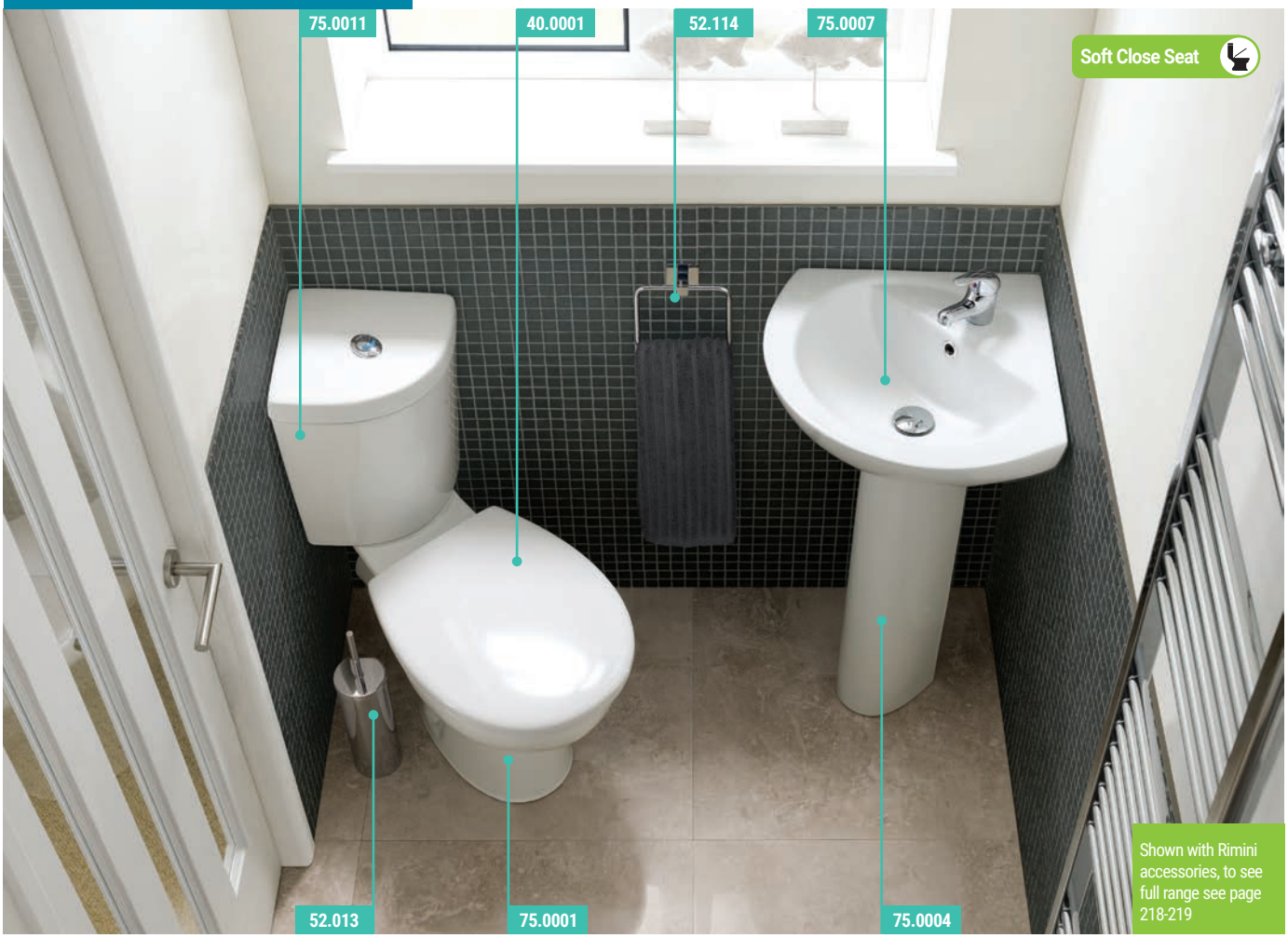

Loire personifies modern French design and blends beautifully into most modern and contemporary bathroom settings. Its slender, smooth curves emphasise the style and panache of this well-priced suite.

FEATURES
- WRAS approved flushing components
- Eco lower flush volume of 5/3 litres
- Delay fill inlet valve - no water waste

Loire WC

Description	Code	€ Ex VAT	€ Inc VAT
Loire Close Coupled WC pan	75.0001	142.00	**174.66**
Loire Corner Cistern inc fittings	75.0011	150.00	**184.50**
Rhone Soft Close Seat	40.0001	118.00	**145.14**
Loire Seat & Cover	40.0002	45.00	**55.35**
Loire/Arkitect Deluxe Seat	50.001	70.00	**86.10**
Loire Soft Close Seat	50.002	185.00	**227.55**
Jollytronic universal bottom entry cistern fitting	7.0000	189.00	**232.47**

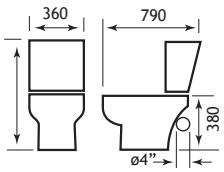

75.0001/75.0011



*Soil can be turned left or right at the back of the pan



LOIRE WC



Loire WC

Description	Code	€ Ex VAT	€ Inc VAT
Loire 400 Corner Basin 1TH	75.0007	115.00	**141.45**
Loire 400 Corner Basin 2TH	75.0017	115.00	**141.45**
Loire Pedestal	75.0004	58.00	**71.34**

LOIRE CORNER BASIN



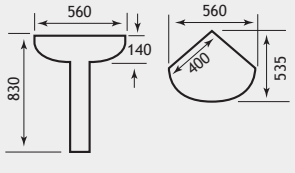

75.0004 | 75.0007/75.0017

Loire Range



LOIRE BTW

LOIRE BTW PAN

Description	Code	€ Ex VAT	€ Inc VAT
Loire BTW WC pan & Fixing Bolts	75.0010	201.00	**247.23**
Loire Seat & Cover	40.0002	45.00	**55.35**
Loire/Arkitect deluxe seat	50.001	70.00	**86.10**
Loire Soft Close Seat	50.002	185.00	**227.55**
Rhone Soft Close Seat	40.0001	118.00	**145.14**

FEATURES
- WRAS approved flushing components
- Eco lower flush volume of 5/3 litres
- Delay fill inlet valve - no water waste

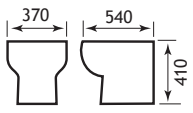

75.0010

LOIRE SEMI RECESSED BASINS

LOIRE SEMI RECESSED BASINS

Description	Code	€ Ex VAT	€ Inc VAT
Loire Semi-Recessed Casin 1TH	75.0006	150.00	**184.50**

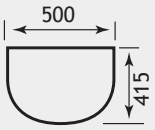

75.0006 / 75.0016 Cut out 260mm

BTW PAN EXTRAS

Description	Code	€ Ex VAT	€ Inc VAT
Vantage plain hidden cistern CP push button	17.001	252.00	**309.96**
Vantage Hidden Cistern with Jacket	17.3029	290.00	**356.70**
Eastbrook jacket hidden cistern - bottom inlet	53.001	157.00	**193.11**
Flexible WC Connector for BTW Pans*	2.009	56.00	**68.88**

*Pan connector 2.009 is recommended for use with our BTW pans.

OSLO SEMI-RECESSED FURNITURE

Description	Code	€ Ex VAT	€ Inc VAT
Oslo 60cm WC Unit	1.052	457.00	**562.11**
Oslo 60cm Basin Unit	1.053	413.00	**507.99**
Laminate Tops Gloss 1500 x 310 mm	28.007	118.00	**145.14**
Bonito 60cm plinth	1.037	31.00	**38.13**

Metro Range

METRO SHORT PROJECTION WC & BASIN



A new take and continuation our of Metro range. It's simple yet striking design is characterised by a series of curves and straight lines, appealing to anyone who likes the minimalist look.

FEATURES
- Space saving
- 2 in 1 combination
- Water saving
- Hot & cold feed
- Tap included

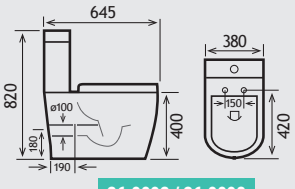

26.0092 / 26.0098

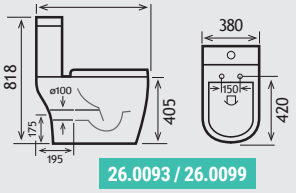

26.0093 / 26.0099

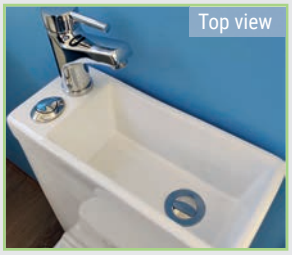

Water Saving Tech

*Soil can be turned left or right at the back of the pan



METRO SHORT PROJECTION CISTERN WITH BASIN			
Description	Code	€ Ex VAT	€ Inc VAT
Metro short projection cistern & tap	26.0102	290.00	**356.70**
Metro short projection CC Pan	26.0093	317.00	**389.91**
Metro short projection rimless CC Pan	26.0099	332.00	**408.36**
Metro short projection CC BTW Pan	26.0092	338.00	**415.74**
Metro short projection rimless CC BTW Pan	26.0098	352.00	**432.96**
Metro short projection soft close seat	26.0105	108.00	**132.84**
Metro short projection cistern	26.0094	139.00	**170.97**

OLSO FURNITURE			
Description	Code	€ Ex VAT	€ Inc VAT
Oslo 60cm slimline basin unit	1.053	413.00	**507.99**
Bonito 60cm plinth White	1.037	31.00	**38.13**
Laminate Top Gloss 1000 x 310 mm	28.006	103.00	**126.69**

Metro Range

METRO SEMI RECESSED SLIM RIM BASIN



Cut out 260mm

METRO SLIM RIM SEMI RECESSED BASIN

Description	Code	€ Ex VAT	€ Inc VAT
Metro slim rim semi recessed basin	26.0097	167.00	**205.41**

METRO SLIM RIM BASIN

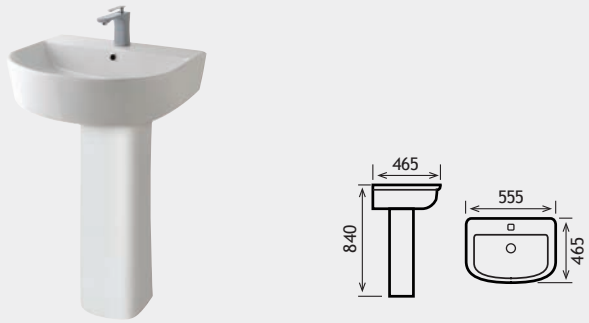

METRO SLIM RIM BASIN

Description	Code	€ Ex VAT	€ Inc VAT
Metro slim rim basin	26.0095	159.00	**195.57**
Metro slim rim pedestal	26.0096	84.00	**103.32**

METRO CC BTW PAN RANGE

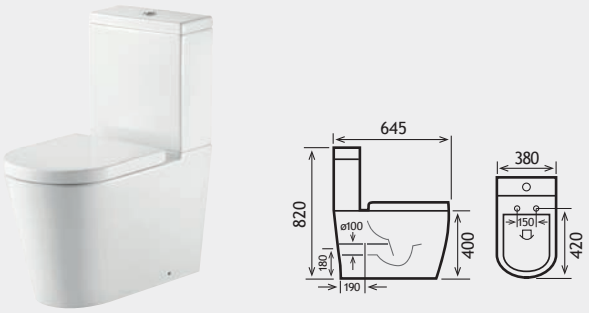

METRO SHORT PROJECTION CC BTW PAN

Description	Code	€ Ex VAT	€ Inc VAT
Metro short projection CC BTW Pan	26.0092	338.00	**415.74**
Metro short projection cistern	26.0094	139.00	**170.97**
Metro short projection soft close seat	26.0105	108.00	**132.84**
Jollytronic universal bottom entry cistern fitting	7.0000	189.00	**232.47**

METRO SHORT PROJECTION RIMLESS CC BTW PAN

Description	Code	€ Ex VAT	€ Inc VAT
Metro short projection rimless CC BTW Pan	26.0098	352.00	**432.96**
Metro short projection cistern	26.0094	139.00	**170.97**
Metro short projection soft close seat	26.0105	108.00	**132.84**
Jollytronic universal bottom entry cistern fitting	7.0000	189.00	**232.47**

*For more information see page 201.

THIS METRO RANGE FEATURES
RIMLESS TECHNOLOGY



EASY CLEAN - Nowhere for germs to hide.
AESTHETICS - Simplistic look.
EFFICIENT - A complete rim flush for effective cleaning.

METRO CC PAN RANGE

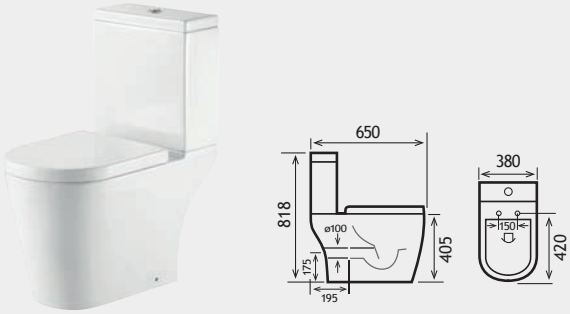

METRO SHORT PROJECTION CC PAN

Description	Code	€ Ex VAT	€ Inc VAT
Metro short projection CC Pan	26.0093	317.00	**389.91**
Metro short projection cistern	26.0094	139.00	**170.97**
Metro short projection soft close seat	26.0105	108.00	**132.84**
Jollytronic universal bottom entry cistern fitting	7.0000	189.00	**232.47**

METRO SHORT PROJECTION RIMLESS CC PAN

Description	Code	€ Ex VAT	€ Inc VAT
Metro short projection rimless CC Pan	26.0099	332.00	**408.36**
Metro short projection cistern	26.0094	139.00	**170.97**
Metro short projection soft close seat	26.0105	108.00	**132.84**

METRO HIGH LEVEL CC BTW PAN

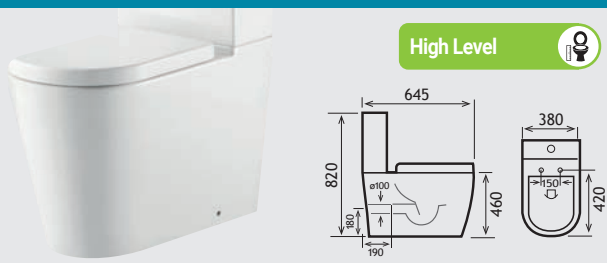

METRO HIGH LEVEL CC BTW PAN

Description	Code	€ Ex VAT	€ Inc VAT
Metro short projection high level CC BTW Pan	26.0101	385.00	**473.55**
Metro short projection cistern	26.0094	139.00	**170.97**
Metro short projection soft close seat	26.0105	108.00	**132.84**

METRO HIGH LEVEL RIMLESS CC BTW PAN

Description	Code	€ Ex VAT	€ Inc VAT
Metro short projection Rimless high level CC BTW Pan	26.0100	401.00	**493.23**
Metro short projection cistern	26.0094	139.00	**170.97**
Metro short projection soft close seat	26.0105	108.00	**132.84**

Minima Range

MINIMA





Minima			
Description	**Code**	**€ Ex VAT**	**€ Inc VAT**
Minima pan & soft close seat*†	56.0018	303.00	**363.60**
Minima cistern inc fittings†	56.0020	91.00	**109.20**
Minima soft close seat†	56.0019	86.00	**103.20**
Minima basin 1TH†	56.0016	90.00	**108.00**
Minima pedestal†	56.0017	61.00	**73.20**
Minima semi-pedestal for 56.0016†	56.0067	86.00	**105.78**
Minima BTW pan c/w soft close seat†	56.0068	394.00	**484.62**
Minima BTW soft close seat†	56.0069	101.00	**121.20**
Minima semi-recessed reduced depth basin 1TH	56.0066	101.00	**121.20**
Jollytronic universal bottom entry cistern fitting	7.0000	189.00	**232.47**

Soil can be turned left or right on close coupled pan.
**See rear of Sanitaryware section for Jollytronic. While Stocks Last†

BTW Pan Extras			
Description	**Code**	**€ Ex VAT**	**€ Inc VAT**
Vantage plain hidden cistern CP push button	17.001	252.00	**309.96**
Vantage Hidden Cistern with Jacket	17.3029	290.00	**356.70**
Eastbrook jacket hidden cistern - bottom inlet	53.001	157.00	**193.11**
Flexible WC Connector for BTW Pans*	2.009	56.00	**68.88**

*Pan connector 2.009 is recommended for use with our BTW pans.

Aimed at the bathroom, cloakroom or ensuite where space is at a premium, the Minima manages to combine style with space-saving qualities.

FEATURES
- Soft close seat
- BTW Soft close seat lifts off for easy cleaning
- Top fix seat
- Small minimalistic basin
- Basin fits with full or semi pedestal
- Soil can be turned left or right on close coupled pan

FEATURES - VANTAGE CISTERN
- WRAS approved flushing components
- Delay fill inlet valve - no water waste

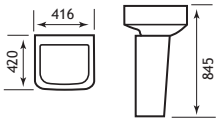

56.0016/56.0017

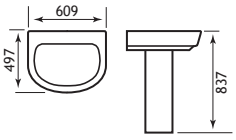

56.0026

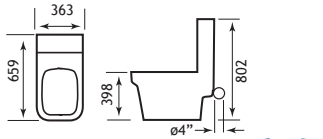

56.0020/ 56.0018

*Soil can be turned left or right at the back of the pan

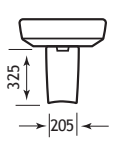

56.0067



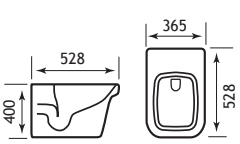

56.0068



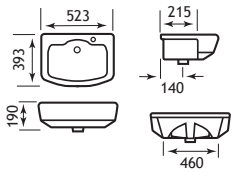

56.0066 Cut out 215mm

Mentmore Range

MENTMORE



Soft Close Seat

A modern design with stylish angled shapes create a beautiful contemporary bathroom

FEATURES
- Soft close seat

MENTMORE WC

Soft Close Seat



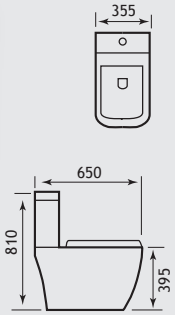

26.0038
26.0036
26.0037

Mentmore WC

Description	Code	€ Ex VAT	€ Inc VAT
Mentmore WC Pan White	26.0036	362.00	**445.26**
Mentmore Cistern inc Fittings White	26.0037	159.00	**195.57**
Mentmore Soft Close Seat White	26.0038	124.00	**152.52**

MENTMORE BASIN



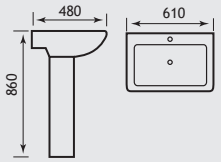

26.0034
26.0035

Mentmore Basin

Description	Code	€ Ex VAT	€ Inc VAT
Mentmore Basin 1TH White	26.0034	173.00	**212.79**
Mentmore Pedestal White	26.0035	93.00	**114.39**

MODERN WATER SAVING OPTION
JOLLYTRONIC ECO FLUSH

Description	Code	€ Ex VAT	€ Inc VAT
Jollytronic universal bottom entry cistern fitting	7.0000	189.00	**232.47**

*See rear of Sanitaryware section for Jollytronic.



Northall Range

NORTHALL PANS

A contemporary rimless pan in both close coupled and back to wall to suit a wide range of installations.

FEATURES
- Quick release soft close seat
- Rimless technology
- Top fix seat
- 2 styles of seat available

Northall Comfort Height BTW CC Pan			
Description	**Code**	**€ Ex VAT**	**€ Inc VAT**
Northall Comfort Height BTW CC Rimelss Pan*	26.0054	364.00	**447.72**
Northall Cistern inc Fittings	26.0040	177.00	**217.71**
Northall Soft Close Seat	26.0042	136.00	**167.28**
Northall/Farringdon Wrap Over Soft Close Seat	26.0056	104.00	**127.92**
Jollytronic universal bottom entry cistern fitting	7.0000	189.00	**232.47**
*Compatible with both 26.0042 & 26.0056			



Northall Comfort Height BTW			
Description	**Code**	**€ Ex VAT**	**€ Inc VAT**
Northall Comfort Height BTW Rimless Pan*	26.0055	384.00	**472.32**
Northall Soft Close Seat	26.0042	136.00	**167.28**
Northall/Farringdon Wrap Over Soft Close Seat	26.0056	104.00	**127.92**
*Compatible with both 26.0042 & 26.0056.			

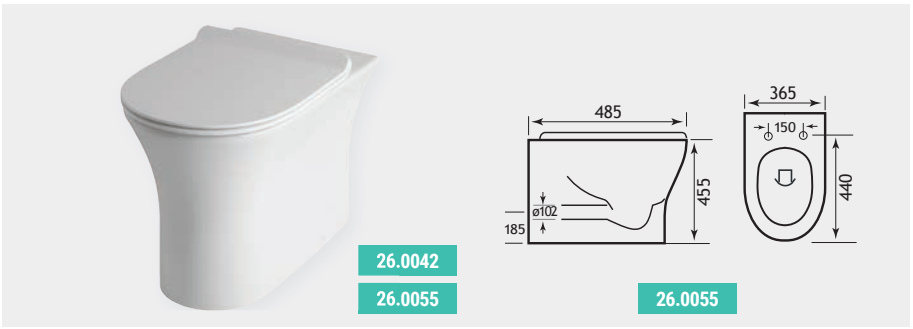

Northall BTW Pan			
Description	**Code**	**€ Ex VAT**	**€ Inc VAT**
Northall BTW Rimless Pan*	26.0041	383.00	**471.09**
Northall Soft Close Seat	26.0042	136.00	**167.28**
Northall/Farringdon Wrap Over Soft Close Seat	26.0056	104.00	**127.92**
*Compatible with both 26.0042 & 26.0056.			

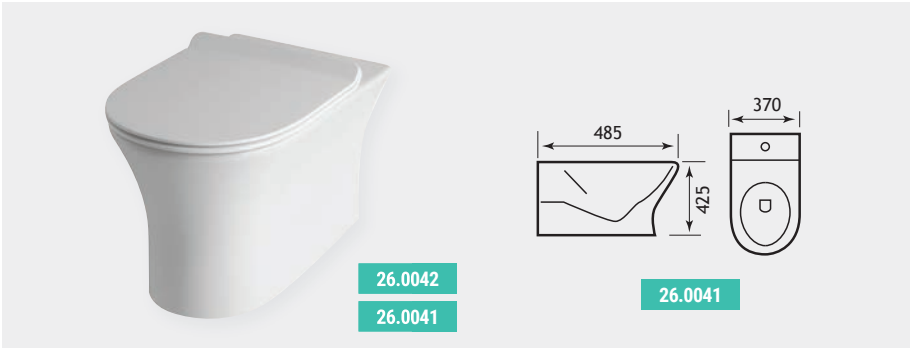

Northall Wall Hung Pan			
Description	**Code**	**€ Ex VAT**	**€ Inc VAT**
Northall Wall Hung Rimless Pan*	26.0104	332.00	**408.36**
Northall Soft Close Seat	26.0042	136.00	**167.28**
Northall/Farringdon Wrap Over Soft Close Seat	26.0056	104.00	**127.92**
*Compatible with both 26.0042 & 26.0056.			

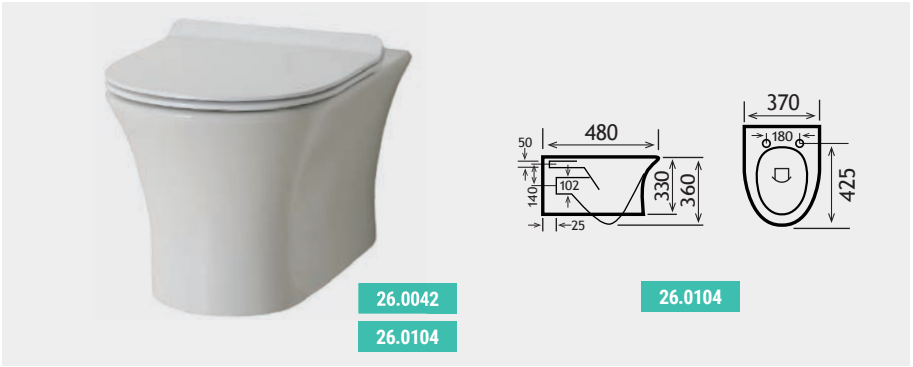

Northall Range

FEATURING Rimless Technology



EASY CLEAN - Nowhere for germs to hide.
AESTHETICS - Simplistic look.
EFFICIENT - A complete rim flush for effective cleaning.

Northall CC BTW WC Pan

Description	Code	€ Ex VAT	€ Inc VAT
Northall BTW WC Pan*	26.0039	374.00	**460.02**
Northall Cistern inc Fittings	26.0040	177.00	**217.71**
Northall Soft Close Seat	26.0042	136.00	**167.28**
Northall/Farringdon Wrap Over Soft Close Seat	26.0056	104.00	**127.92**
Jollytronic universal bottom entry cistern fitting	7.0000	189.00	**232.47**

*Compatible with both 26.0042 & 26.0056

NORTHALL CC BTW WC PAN



Modern Water Saving Option
Jollytronic Eco Flush



CODE 7.0000
See page 201 for further technical information.

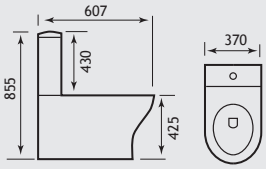

26.0039 / 26.0040

NORTHALL BASIN RANGE



Northall/Farringdon 450mm 1TH Basin

Description	Code	€ Ex VAT	€ Inc VAT
Farringdon/Northall 450mm 1TH basin	26.0064	103.00	**126.69**
Farringdon/Northall Semi ped	26.0065	87.00	**107.01**

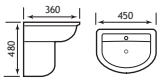

26.0064/26.0065

Northall/Farringdon 500mm 1TH Basin

Description	Code	€ Ex VAT	€ Inc VAT
Farringdon/Northall 500mm 1TH basin	26.0066	135.00	**166.05**
Farringdon/Northall Semi ped	26.0065	87.00	**107.01**

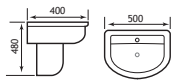

26.0066/26.0065

Northall/Farringdon 550mm 1TH Basin

Description	Code	€ Ex VAT	€ Inc VAT
Farringdon/Northall 550mm 1TH basin	26.0062	143.00	**175.89**
Farringdon/Northall Semi ped	26.0065	87.00	**107.01**

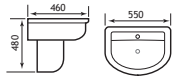

26.0062/26.0065



Northall/Farringdon 450mm 1TH Basin

Description	Code	€ Ex VAT	€ Inc VAT
Farringdon/Northall 450mm 1TH basin	26.0064	103.00	**126.69**
Farringdon/ Northall Pedestal	26.0063	93.00	**114.39**

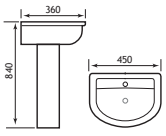

26.0064/26.0063

Northall/Farringdon 500mm 1TH Basin

Description	Code	€ Ex VAT	€ Inc VAT
Farringdon/Northall 500mm 1TH basin	26.0066	135.00	**166.05**
Farringdon/ Northall Pedestal	26.0063	93.00	**114.39**

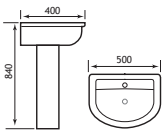

26.0066/26.0063

Northall/Farringdon 550mm 1TH Basin

Description	Code	€ Ex VAT	€ Inc VAT
Farringdon/Northall 550mm 1TH basin	26.0062	143.00	**175.89**
Farringdon/ Northall Pedestal	26.0063	93.00	**114.39**

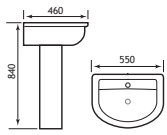

26.0062/26.0063

Tamarind Range

TAMARIND



Elegant and classic with a striking period design, the Tamarind range is the perfect complement for the more traditional home.

FEATURES
- Soft close seat, lifts off for easy cleaning
- Cistern inlet left or right
- Available as lever or push button flush
- Soil can be turned left or right at back of pan

Tamarind Corner Basin		WAS	NOW JUST	
Description	Code	€ Ex VAT	€ Ex VAT	€ Inc VAT
Tamarind Corner Basin White	26.0024	~~78.00~~	82.00	**100.86**

TAMARIND CORNER BASIN

26.0024



Tamarind Range



Seat for illustration purposes only.

TAMARIND BASIN

26.0019

REDUCED PRICE

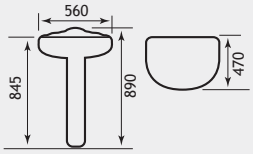



26.0021

Tamarind Corner Basin		WAS	NOW JUST	
Description	Code	€ Ex VAT	€ Ex VAT	€ Inc VAT
Tamarind 560 Basin 1TH	26.0019	~~81.00~~	84.00	**103.32**
Tamarind 560 Basin 2TH	26.0020	~~81.00~~	84.00	**103.32**
Tamarind Pedestal	26.0021	~~46.00~~	49.00	**60.27**

TAMARIND CLOSE COUPLED WC

26.0016/26.0017

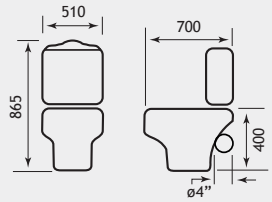

26.0016/26.0018

REDUCED PRICE

*Soil can be turned left or right at the back of the pan



Tamarind Close Coupled WC		WAS	NOW JUST	
Description	Code	€ Ex VAT	€ Ex VAT	€ Inc VAT
Tamarind WC Pan	26.0016	~~136.00~~	136.00	**167.28**
Tamarind Cistern inc Lever Flush Fittings	26.0018	~~93.00~~	96.00	**118.08**
Tamarind Cistern inc Push Button Fittings	26.0017	~~82.00~~	84.00	**103.32**
Loire soft close seat	50.002	-	185.00	**227.55**
Jollytronic universal bottom entry cistern fitting **	7.0000	-	189.00	**232.47**

**Jollytronic cistern fitting will only fit 26.0017, for more information rear of Sanitaryware section. Sherwood/Diamante standard and soft close seats are also suitable for the Tamarind pan but cannot be fitted with lever cistern, seat rests on lever when in upright position.

TAMARIND BASIN

26.0022

REDUCED PRICE

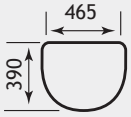

26.0022



Tamarind Basin		WAS	NOW JUST	
Description	Code	€ Ex VAT	€ Ex VAT	€ Inc VAT
Tamarind Basin 465 1TH White	26.0022	~~62.00~~	62.00	**76.26**
Tamarind Basin 465 2TH White	26.0023	~~62.00~~	62.00	**76.26**

Temptation Range

TEMPTATION



From the minute that you set eyes on the stylish lines of this suite you will be tempted. The easy-to-clean lines of the WC suite and the elegant, sweeping style of the basin make the Temptation the perfect addition to any bathroom.

FEATURES
- Soft close seat, lifts off for easy cleaning
- Soil can be turned left or right
- Top fix seat

Temptation Wall Mounted Basin		WAS	NOW JUST	
Description	Code	€ Ex VAT	€ Ex VAT	€ Inc VAT
Temptation basin 450 1TH†	27.0721	~~68.00~~	49.00	**58.80**
Wall mounted only.				
WHILE STOCKS LAST! †				

TEMPTATION WALL MOUNTED BASIN

REDUCED PRICE



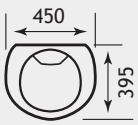

27.0721

Temptation Range

TEMPTATION BASIN 400

REDUCED PRICE



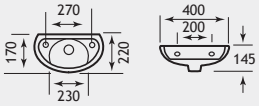

27.9711

Temptation Basin		WAS	NOW JUST	
Description	Code	€ Ex VAT	€ Ex VAT	€ Inc VAT
Temptation basin 400 1TH†	27.0781	~~58.00~~	44.00	**52.80**
Temptation basin 400 2TH†	27.9711	~~58.00~~	44.00	**52.80**

Wall mounted only.

WHILE STOCKS LAST! †

TEMPTATION PAN

REDUCED PRICE



27.0431

Temptation WC		WAS	NOW JUST	
Description	Code	€ Ex VAT	€ Ex VAT	€ Inc VAT
Temptation pan†	27.0431	~~130.00~~	88.00	**105.60**
Temptation cistern inc fittings†	27.0441	~~78.00~~	54.00	**64.80**
Temptation/Kompact seat	21.1141	-	103.00	**126.69**
Temptation/Kompact soft close seat	21.1151	-	212.00	**260.76**
Jollytronic universal bottom entry cistern fitting*	7.0000	-	189.00	**232.47**

*For more information see page 277.

WHILE STOCKS LAST! †

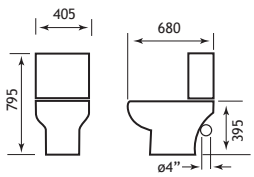

27.0431/27.0441

*Soil can be turned left or right at the back of the pan



TEMPTATION BASIN 500

REDUCED PRICE



27.0461/27.0731

Temptation Basin		WAS	NOW JUST	
Description	Code	€ Ex VAT	€ Ex VAT	€ Inc VAT
Temptation basin 500 1TH** †	27.0731	~~72.00~~	5151.00	**61.26**
Temptation basin 610mm 1TH†	27.0521	~~81.00~~	56.00	**67.20**
Temptation pedestal (Fits both above) †	27.0461	~~37.00~~	42.00	**51.66**

**Can be wall-hung or mounted on a pedestal.

WHILE STOCKS LAST! †

TEMPTATION BASIN 575

REDUCED PRICE



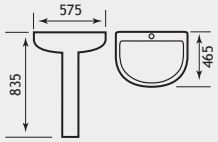

27.0451/27.0461

Temptation Basin		WAS	NOW JUST	
Description	Code	€ Ex VAT	€ Ex VAT	€ Inc VAT
Temptation basin 575mm 1TH†	27.0451	~~92.00~~	62.00	**74.40**
Kompact/Temptation pedestal†	27.0461	~~37.00~~	42.00	**51.66**

WHILE STOCKS LAST! †

Wingrave II Range

WINGRAVE II



Stylish and adaptable, Wingrave combines elegant straight lines with soft curves to stunning effect.

FEATURES
- Soft close seat, lifts off for easy cleaning
- Top fix seat



FEATURING
Rimless Technology

EASY CLEAN
Nowhere for germs to hide.

AESTHETICS
Simplistic look.

EFFICIENT
A complete rim flush for effective cleaning.

Wingrave II Range

WINGRAVE II BASIN



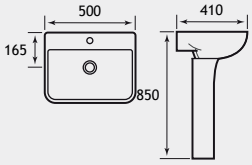

75.0031 75.0032

Wingrave II Basin

Description	Code	€ Ex VAT	€ Inc VAT
Wingrave II 500 1TH basin	75.0031	86.00	**105.78**
Wingrave II pedestal	75.0032	47.00	**57.81**

Tap for illustration purposes only.

WINGRAVE II BTW PAN

Soft Close Seat



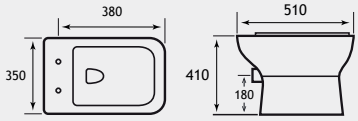

75.0029 75.0033

Wingrave II BTW Pan

Description	Code	€ Ex VAT	€ Inc VAT
Wingrave II BTW pan	75.0029	240.00	**295.20**
Wingrave II soft close seat	75.0033	82.00	**100.86**

WINGRAVE II CC PAN

Soft Close Seat



*Soil can be turned left or right at the back of the pan

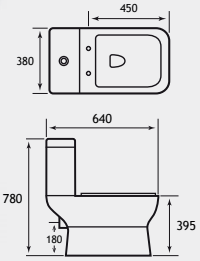

75.0026 75.0028

Wingrave II CC Pan

Description	Code	€ Ex VAT	€ Inc VAT
Wingrave II CC pan	75.0026	167.00	**205.41**
Wingrave II cistern	75.0028	105.00	**129.15**
Wingrave II soft close seat	75.0033	82.00	**100.86**

WINGRAVE II CC RIMLESS PAN

Soft Close Seat

Rimless Tech



*Soil can be turned left or right at the back of the pan

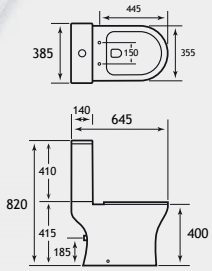

75.0027 75.0028

Wingrave II CC Rimless Pan

Description	Code	€ Ex VAT	€ Inc VAT
Wingrave II CC rimless pan	75.0027	203.00	**249.69**
Wingrave II cistern	75.0028	105.00	**129.15**
Wingrave II soft close seat	75.0033	82.00	**100.86**

Sit on Basins

RENATA - SIT ON BASIN 430





The Renata shown comes with overflow.

Renata sit on basin

Description	Code	€ Ex VAT	€ Inc VAT
Renata sit on basin 430 White**	51.029	255.00	**313.65**
Trap for external overflow kit	7.0015	34.00	**41.82**
Flip Top Basin Waste - Unslotted	25.0005	27.00	**33.21**

**NB Renata also requires a 7.0015 trap and unslotted chrome waste 25.0005.

FEATURES
- Made of 75% natural marble stone
- Repairable if chipped
- Seamless surface, easy to maintain

RONDO - SIT ON BASIN 412



Rondo basin on Castilla drawer unit see page 233.

51.032



Rondo

Description	Code	€ Ex VAT	€ Inc VAT
Rondo sit on basin 412 White	51.032	283.00	**348.09**
Flip top basin waste - unslotted Chrome	25.0005	27.00	**33.21**

PRICILLA - SIT ON BASIN 510



Pricilla sit on basin

Description	Code	€ Ex VAT	€ Inc VAT
Pricilla sit on basin 510x300 White	51.031	283.00	**348.09**

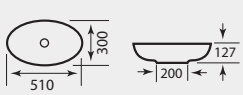

51.031

NATURA - SIT ON BASIN 500



Natura sit on basin

Description	Code	€ Ex VAT	€ Inc VAT
Natura sit on basin 500x400 White	51.030	283.00	**348.09**

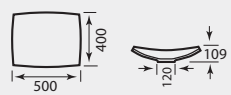

51.030

BARBRO - SIT ON BASIN 460



Barbro sit on basin

Description	Code	€ Ex VAT	€ Inc VAT
Barbro sit on basin 460 White	51.033	426.00	**523.98**
Flip top basin waste - unslotted Chrome	25.0005	27.00	**33.21**

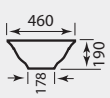

51.033

Cloakroom Basins

SORRENTO WALL HUNG BASINS



All Sorrento basins offer a flexible design option for numerous modern applications.

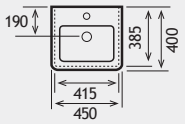

26.0088



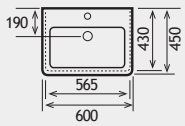

26.0089

Sorrento 45 (450mm x 397mm)

Description	Code	€ Ex VAT	€ Inc VAT
Sorrento 45cm Ceramic top	26.0088	152.00	**186.96**
Ceramic Top Basin Slotted Waste	45.0000	37.00	**45.51**

Sorrento 60 (600mm x 445mm)

Description	Code	€ Ex VAT	€ Inc VAT
Sorrento 60cm Ceramic top	26.0089	194.00	**238.62**
Ceramic Top Basin Slotted Waste	45.0000	37.00	**45.51**



26.0090



83.0020

Sorrento 80 (800mm x 445mm)

Description	Code	€ Ex VAT	€ Inc VAT
Sorrento 80cm ceramic top	26.0090	250.00	**307.50**
Ceramic Top Basin Slotted Waste	45.0000	37.00	**45.51**

Sorrento 100 (1000mm x 445mm)

Description	Code	€ Ex VAT	€ Inc VAT
Sorrento 100cm Ceramic Top White	83.0020	269.00	**330.87**
Ceramic Top Basin Slotted Waste	45.0000	37.00	**45.51**

CLOAKROOM WALL HUNG BASINS



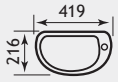



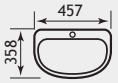

Kompact Cloakroom Basin

Description	Code	€ Ex VAT	€ Inc VAT
Kompact cloakroom basin 419x216 1TH RH White	27.0381	96.00	**118.08**

Kompact Basin

Description	Code	€ Ex VAT	€ Inc VAT
Kompact Basin 457mm 1TH White	27.0401	122.00	**150.06**



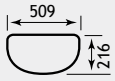



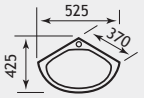

Kompact Cloakroom Basin

Description	Code	€ Ex VAT	€ Inc VAT
Kompact cloakroom basin 509x216 1TH RH	27.0391	103.00	**126.69**

Tamarind Corner Basin

Description	Code	€ Ex VAT	€ Inc VAT
Tamarind Corner Basin White	26.0024	82.00	**100.86**

Cloakroom Basins

CLOAKROOM BASINS



Temptation

Description	Code	€ Ex VAT	€ Inc VAT
Temptation basin 450 1TH	27.0721	49.00	**58.80**
Wall mounted only.			



Dura

Description	Code	€ Ex VAT	€ Inc VAT
Dura semi pedestal inc fixings	26.0004	70.00	**86.10**
Dura basin 450mm 1th inc fixings	26.0005	87.00	**107.01**
Dura basin 450mm 2TH inc Fixings	26.0026	96.00	**118.08**

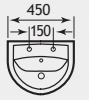

26.0026



Andelle

Description	Code	€ Ex VAT	€ Inc VAT
Andelle 430mm 1TH Basin	24.0010	89.00	**109.47**



Loire 350 x 250 cloakroom basin

Description	Code	€ Ex VAT	€ Inc VAT
Loire 350 x 250 cloakroom basin 1TH RH White	75.0008	83.00	**102.09**
Loire 350 x 250 cloakroom basin 2TH	75.0018	83.00	**102.09**

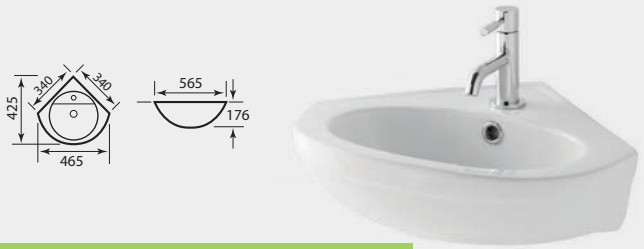

Dura Corner Basin

Description	Code	€ Ex VAT	€ Inc VAT
460mm 1TH inc fixings	26.0013	96.00	**118.08**

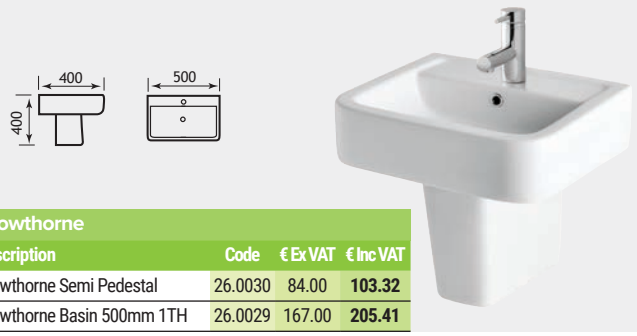

Crowthorne

Description	Code	€ Ex VAT	€ Inc VAT
Crowthorne Semi Pedestal	26.0030	84.00	**103.32**
Crowthorne Basin 500mm 1TH	26.0029	167.00	**205.41**



Cloakroom Basin

Description	Code	€ Ex VAT	€ Inc VAT
Cloakroom basin 457x358 2TH	56.0052	135.00	**166.05**
Cloakroom basin 509x240 1TH	56.0053	135.00	**166.05**
Cloakroom basin 509x240 2TH	56.0054	131.00	**161.13**



Tamarind

Description	Code	€ Ex VAT	€ Inc VAT
Tamarind Basin 465 1TH White	26.0022	62.00	**76.26**
Tamarind basin 465 2TH	26.0023	62.00	**76.26**



Cloakroom

Description	Code	€ Ex VAT	€ Inc VAT
Cloakroom basin 457x358 1TH White	56.0051	135.00	**166.05**



Kompact Corner

Description	Code	€ Ex VAT	€ Inc VAT
Kompact corner cloakroom basin 1TH	27.0371	145.00	**178.35**

Cloakroom Basins

CLOAKROOM BASINS



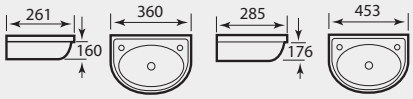

26.0011 26.0012



Dura Cloakroom Basin

Description	Code	€ Ex VAT	€ Inc VAT
Dura 450mm 2TH	26.0012	87.00	**107.01**
Dura 360mm 2TH	26.0011	77.00	**94.71**



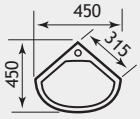

Corner basin

Description	Code	€ Ex VAT	€ Inc VAT
Corner basin 450mm 1TH White	56.0055	136.00	**167.28**





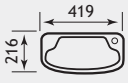

Cloakroom Basin

Description	Code	€ Ex VAT	€ Inc VAT
Cloakroom basin 419x216 2TH	56.0057	131.00	**161.13**





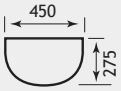

Loire 450 cloakroom basin 1TH RH

Description	Code	€ Ex VAT	€ Inc VAT
Loire 450 x 275 cloakroom basin 1TH RH	75.0009	86.00	**105.78**
Loire 450 x 275 cloakroom basin 2TH	75.0019	86.00	**105.78**



Inset Vanity Basins

INSET VANITY BASINS



Pat Inset

Description	Code	€ Ex VAT	€ Inc VAT
Pat inset basin 500x369 White	51.034	205.00	**252.15**



Osanna

Description	Code	€ Ex VAT	€ Inc VAT
Osanna inset basin 500x370 White	51.028	205.00	**252.15**

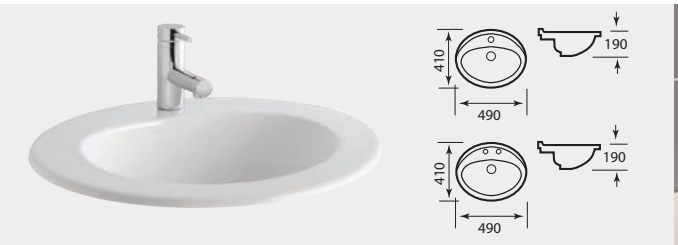

Inset Vanity Basin

Description	Code	€ Ex VAT	€ Inc VAT
Inset Vanity basin 1TH White	26.0052	136.00	**167.28**
Inset vanity basin 2TH White*	26.0053	136.00	**167.28**

*No chain stay



SEMI-RECESSED VANITY BASINS



Loire

Description	Code	€ Ex VAT	€ Inc VAT
Loire Semi-Recessed basin 1TH White	75.0006	150.00	**184.50**





Semi-Recessed Basins

SEMI-RECESSED VANITY BASINS





Metro Slim Rim

Description	Code	€ Ex VAT	€ Inc VAT
Metro slim rim semi recessed basin	26.0097	167.00	**205.41**





Bijou

Description	Code	€ Ex VAT	€ Inc VAT
Bijou/Collindale Semi recessed basin White	26.0076	175.00	**215.25**





Kompact

Description	Code	€ Ex VAT	€ Inc VAT
Kompact reduced depth SR basin 1TH LH White	27.0361	168.00	**206.64**
Kompact reduced depth SR basin 2TH White	27.9361	168.00	**206.64**





Dura

Description	Code	€ Ex VAT	€ Inc VAT
Dura semi recessed basin 1TH White	26.0009	105.00	**129.15**

Back to Wall Pans

COLLINDALE

Comfort Height

Soft Close Seat

Rimless Tech



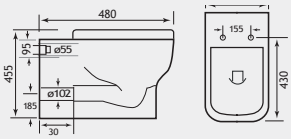

Description	Code	€ Ex VAT	€ Inc VAT
Collindale Rimless Comfort Height BTW Pan	26.0068	355.00	**436.65**
Bijou/Collindale Soft close seat	26.0070	115.00	**141.45**
Flexible Connector for BTW Pans	2.009	56.00	**68.88**

COLLINDALE



NORTHALL

Comfort Height

Soft Close Seat

Rimless Tech



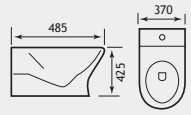

26.0041 / 26.0042

Description	Code	€ Ex VAT	€ Inc VAT
Northall BTW Pan	26.0041	383.00	**471.09**
Northall Soft Close Seat	26.0042	136.00	**167.28**
Northall High Level BTW	26.0055	384.00	**472.32**
Northall/Farringdon Wrap Over Soft Close Seat	26.0056	104.00	**127.92**

BIJOU

Soft Close Seat

Rimless Tech



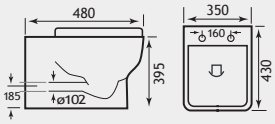

Description	Code	€ Ex VAT	€ Inc VAT
Bijou BTW Pan White	26.0073	290.00	**356.70**
Bijou Rimless BTW Pan White	26.0084	290.00	**356.70**
Bijou/Collindale Soft close seat White	26.0070	115.00	**141.45**
Flexible Connector for BTW Pans	2.009	56.00	**68.88**

KOMPACT

Soft Close Seat



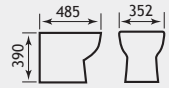

Description	Code	€ Ex VAT	€ Inc VAT
Kompact BTW pan**	27.0321	238.00	**292.74**
Temptation/Kompact seat	21.1141	103.00	**126.69**
Temptation/Kompact soft close seat	21.1151	212.00	**260.76**
Flexible Connector for BTW Pans	2.009	56.00	**68.88**

**Pan connector 2.009 is recommended for use with our BTW pan.

KENLEY

Soft Close Seat

Rimless Tech



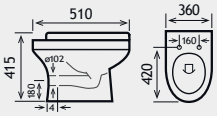

Description	Code	€ Ex VAT	€ Inc VAT
Kenley BTW Pan	26.0168	192.00	**236.16**
Kenley Rimless BTW Pan	26.0169	208.00	**255.84**
Kenley Soft Close Seat	26.0170	103.00	**126.69**

KENLEY COMFORT HEIGHT

Comfort Height

Soft Close Seat



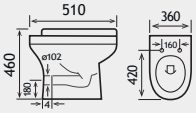

Rimless Tech

Description	Code	€ Ex VAT	€ Inc VAT
Kenley Comfort Height BTW Pan	26.0175	282.00	**346.86**
Kenley Rimless BTW Pan	26.0169	208.00	**255.84**
Kenley Soft Close Seat	26.0170	103.00	**126.69**

KENLEY COMFORT HEIGHT



Back to Wall Pans

WINGRAVE II

Soft Close Seat

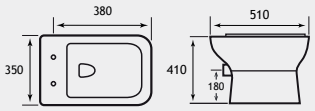



Wingrave II BTW Pan

Description	Code	€ Ex VAT	€ Inc VAT
Wingrave II BTW pan	75.0029	240.00	**295.20**
Wingrave II soft close seat	75.0033	82.00	**100.86**

DURA

Soft Close Seat

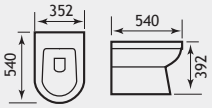



Description	Code	€ Ex VAT	€ Inc VAT
Dura BTW pan inc fixings	26.0008	167.00	**205.41**
Dura High Level BTW Pan	26.0047	273.00	**335.79**
Dura High Level BTW Rimless Pan	26.0133	301.00	**370.23**
Dura Deluxe Soft Close Szeat	26.0015	103.00	**126.69**

ARKITECT

Soft Close Seat

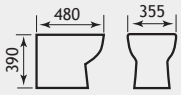



Description	Code	€ Ex VAT	€ Inc VAT
Arkitect BTW WC pan	10.017	182.00	**218.40**
Loire/Arkitect deluxe seat	50.001	70.00	**86.10**
Loire soft close seat	50.002	185.00	**227.55**
Flexible Connector for BTW Pans	2.009	56.00	**68.88**

**Pan connector 2.009 is recommended for use with our BTW pan.

FARRINGDON

Soft Close Seat

Rimless Tech

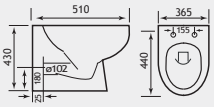



Description	Code	€ Ex VAT	€ Inc VAT
Farringdon BTW pan	26.0058	297.00	**365.31**
Northall/Farringdon Wrap Over Soft Close Seat	26.0056	104.00	**127.92**
Farringdon Rimless BTW Pan	26.0079	297.00	**365.31**
Flexible Connector for BTW Pans	2.009	56.00	**68.88**

LOIRE

Soft Close Seat

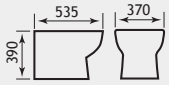



Description	Code	€ Ex VAT	€ Inc VAT
Loire BTW WC pan & Fixing Bolts**	75.0010	201.00	**247.23**
Rhone soft close seat	40.0001	118.00	**145.14**
Flexible Connector for BTW Pans	2.009	56.00	**68.88**

**Pan connector 2.009 is recommended for use with our BTW pan.

LOIRE



LISBON II

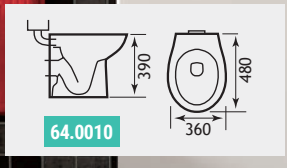

Description	Code	€ Ex VAT	€ Inc VAT
Lisbon II BTW Pan†	64.0010	136.00	**163.20**
Lisbon II BTW & Corner Pan Seat†	64.0011	39.00	**46.80**
Lisbon II BTW & Corner Pan Soft Close Seat†	64.0025	107.00	**128.40**
Lisbon II Semi Recessed Basin 1TH†	64.0022	98.00	**117.60**
Flexible Connector for BTW Pans	2.009	56.00	**68.88**

**Pan connector 2.009 is recommended for use with our BTW pan.

†While Stocks Last

Soft Close Seat

Seats sold separately

Wall Hung Pans

SEINE

Soft Close Seat

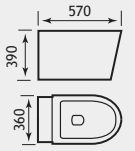



Description	Code	€ Ex VAT	€ Inc VAT
Seine Wall Hung WC Pan White**	40.0004	286.00	**351.78**
Seine Wall Hung WC Soft Close Seat White	40.0005	77.00	**94.71**

** Requires either wall-hung bracket or frame - See page 202.

MOSELLE

Soft Close Seat

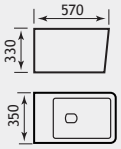



Description	Code	€ Ex VAT	€ Inc VAT
Moselle Wall Hung WC Pan White**	40.0006	286.00	**351.78**
Moselle Wall Hung WC Soft Close Seat White	40.0007	53.00	**63.60**

** Requires either wall-hung bracket or frame - See page 292.

SOMME

Soft Close Seat

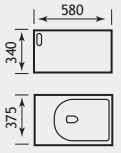



Description	Code	€ Ex VAT	€ Inc VAT
Somme Wall Hung WC Pan White** †	40.0008	367.00	**451.41**
Somme Wall Hung WC Soft Close Seat White†	40.0009	77.00	**94.71**

FARRINGDON

Soft Close Seat

Rimless Tech

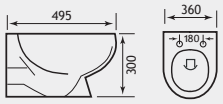



Description	Code	€ Ex VAT	€ Inc VAT
Farringdon Rimless Wall Hung Pan White	26.0081	313.00	**384.99**
Northall/Farringdon Wrap Over Soft Close Seat White	26.0056	104.00	**127.92**
Northall/Farringdon Wrap Over Soft Close Seat White	50.008	181.00	**222.63**

BIJOU

Soft Close Seat

Rimless Tech

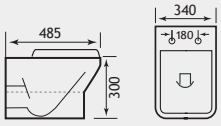



Description	Code	€ Ex VAT	€ Inc VAT
Bijou Wall Hung Pan White	26.0072	307.00	**377.61**
Bijou/Collindale Soft close seat White	26.0070	115.00	**141.45**
Bijou Rimless Wall Hung Pan White	26.0083	307.00	**377.61**

BIJOU



NORTHALL

Soft Close Seat

Rimless Tech

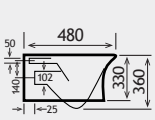

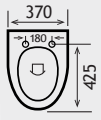



Description	Code	€ Ex VAT	€ Inc VAT
Northall Wall Hung Pan	26.0104	332.00	**408.36**
Northall / Farringdon Wrap Over Soft Close Seat	26.0056	104.00	**127.92**
Northall Soft Close Seat	26.0042	136.00	**167.28**

NORTHALL



Concealed Cisterns & Jollytronic

Concealed Cistern & Frames	Code	€ Ex VAT	€ Inc VAT
Concealed cistern & frame 1109 x 555 -†	73.0001	362.00	**445.26**
Concealed cistern & frame 795 x 400 -†	73.0002	346.00	**425.58**

FEATURES: 73. Code cisterns suitable from 0.2 bar

CONCEALED CISTERNS & FRAMES

Pneunatic Concealed Cistern & Frames	Code	€ Ex VAT	€ Inc VAT
Pneumatic concealed cistern and frame 820x500x150 †	90.0001	306.00	**376.38**
Pneumatic concealed cistern and frame 1160x500x90 †	90.0002	306.00	**376.38**

† For more information see pages 202-203.

ELECTRONIC ECO FLUSH

The new, hygienic, no touch flushing system with water saving Eco-Stop flushing technology, allows the user to control how much water is needed to clear the toilet.

BUILT IN SENSOR
This system flushes for as long as the sensor is covered which allows the user to flush the toilet for just the right length of time needed to clear.

15,000 FLUSHING CYCLES PER BATTERY
It is a battery operated system giving a typical 15,000 flushing cycles before battery replacement is needed. It also has a manual over-ride in the unlikely event of battery failure.

JOLLYTRONIC - ECO FLUSH			
Description	Code	€ Ex VAT	€ Inc VAT
Jollytronic universal bottom entry cistern fitting	7.0000	189.00	**232.47**
For ceramic cisterns only			



Code: 7.0000 (For ceramic cisterns only)

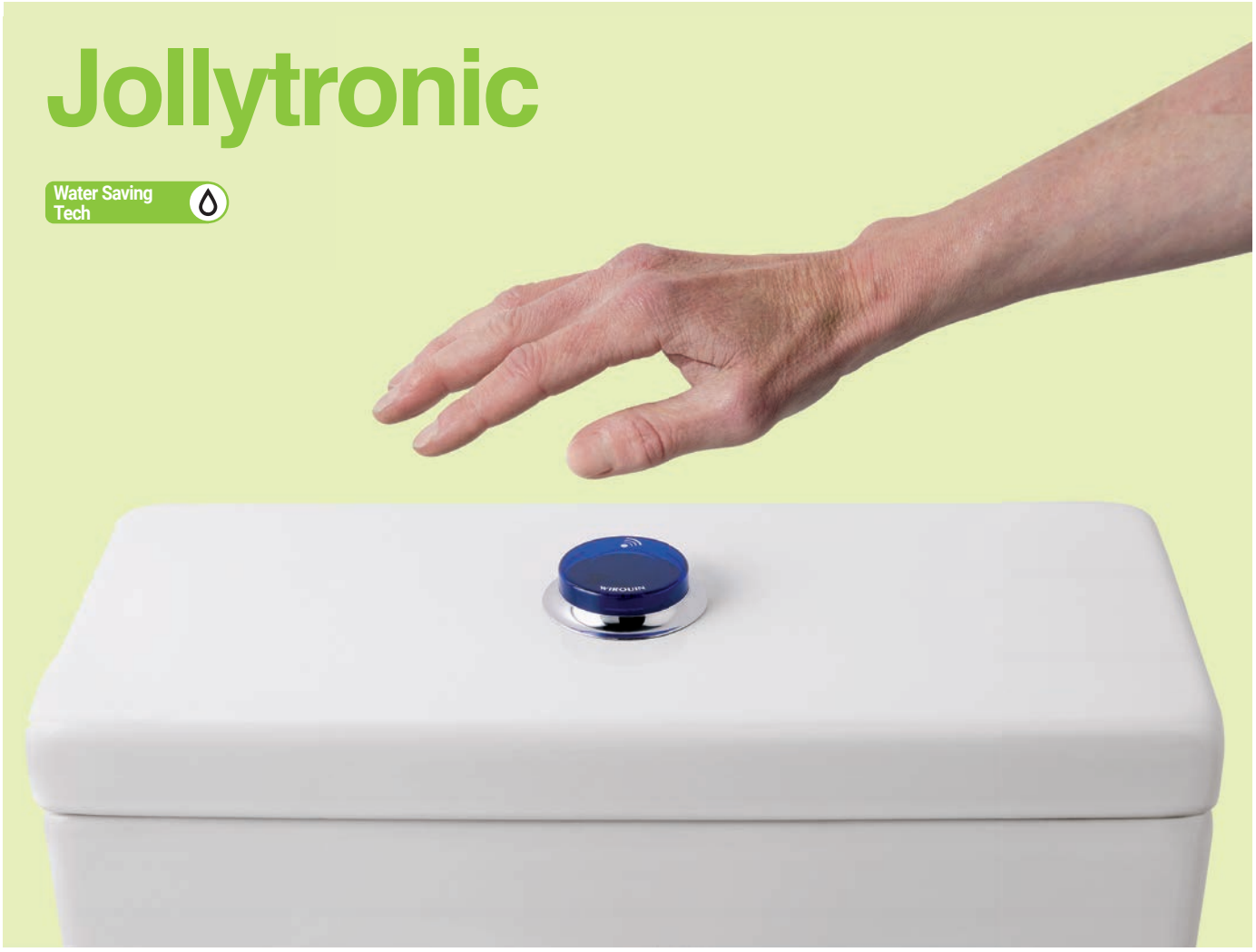

Concealed Cisterns

Concealed cisterns pneumatic mechanism

Description	Code	€ Ex VAT	€ Inc VAT
Concealed cistern and frame 820x500x150*	90.0001	306.00	**376.38**
Concealed cistern and frame 1160x500x90*	90.0002	306.00	**376.38**
Pneumatic universal concealed cistern	90.0003	177.00	**217.71**
Pneumatic hidden cistern, top inlet**	90.0004	153.00	**188.19**

* A push plate is required, see below for options.

** 90.0004 Push button supplied in box.

Cisterns compatible with Oslo tall cistern units, or built in only.

CONCEALED CISTERNS

FEATURES
- WRAS approved flushing components
- Large fitting tolerance
- Solid fixing kits
- 90.0004 easy to maintain, front and top access
- Pneumatic controlled flush

90.0004

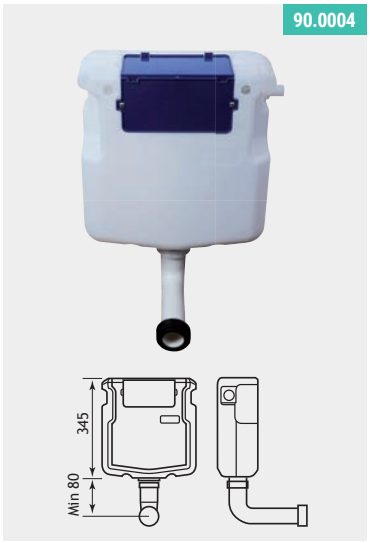

90.0003

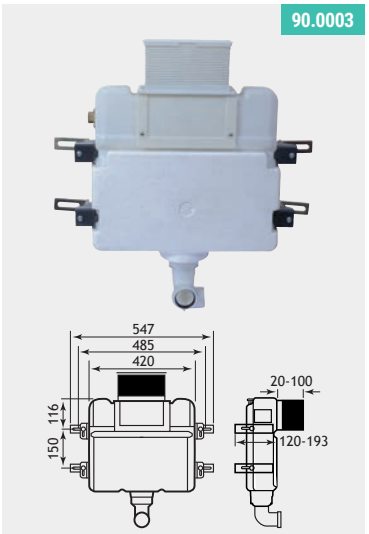

90.0002

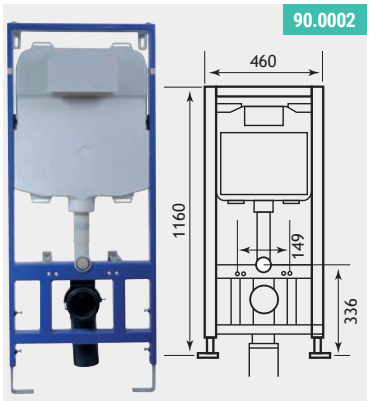

90.0001

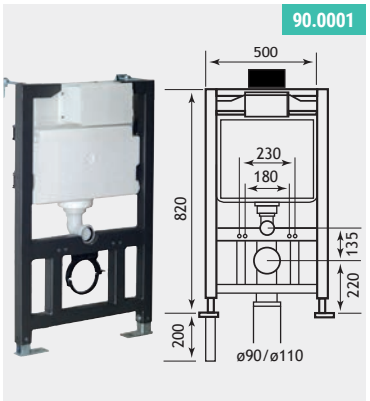

73.0003 90.0010

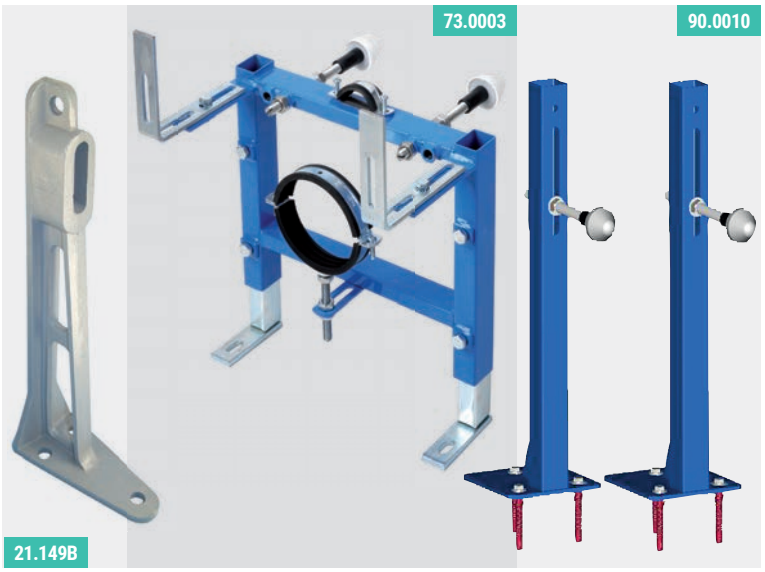

21.149B

90.0005



90.0006



90.0007



90.0008



Push plates

Description	Code	€ Ex VAT	€ Inc VAT
Push plate square White	90.0005	27.00	**33.21**
Push plate square Chrome	90.0006	47.00	**57.81**
Push plate round Chrome	90.0007	47.00	**57.81**
Push plate round White	90.0008	27.00	**33.21**

The above push plates are only compatiable with 90 code concealed cisterns.

Pneumatic Mechanism
Tried and Tested

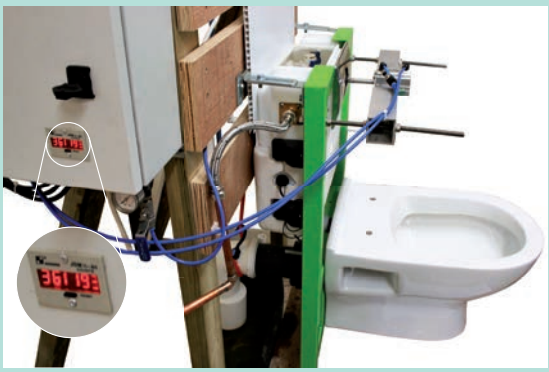

As part of our product testing, greater functionality development and compliance certification, we test our products for a simulated lifetime of use. We were looking to measure the wear and tear on this cistern and fittings based on 10 flushes a day for 30 years which is 109,500 flushes. This product has sailed past this figure and now is over 360,000 flushes!!

Brackets

Description	Code	€ Ex VAT	€ Inc VAT
Wall Hung pan/bidet brackets -	21.149B	266.00	**327.18**
Mirage frame 310 x 345 -	73.0003	219.00	**269.37**
L-Shape wall hung pan/bidet brackets	90.0010	107.00	**131.61**

Sanitaryware Accessories

LP1

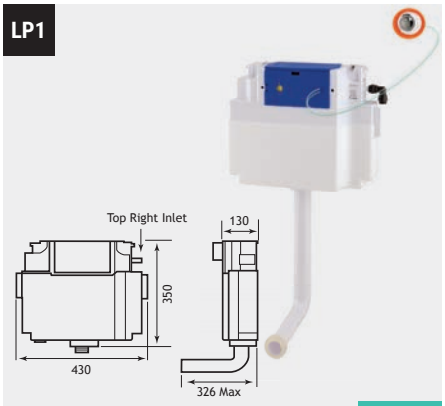

17.3029

LP1

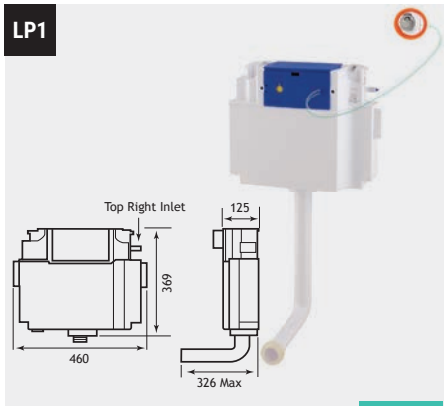

17.001

LP1

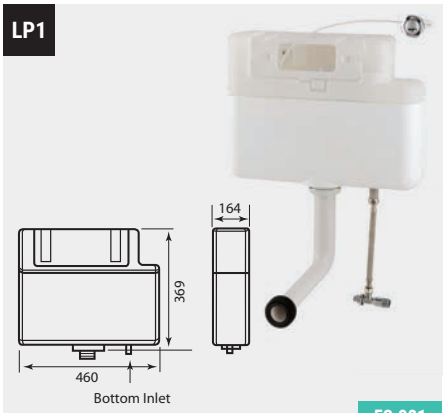

53.001

Hidden Cisterns

Description	Code	€ Ex VAT	€ Inc VAT
Vantage hidden cistern with jacket	17.3029	290.00	**356.70**
Vantage plain hidden cistern CP push button	17.001	252.00	**309.96**
Eastbrook jacket hidden cistern - bottom inlet	53.001	157.00	**193.11**

Cisterns compatible with standards height units, or built in.

FEATURES
- **WRAS approved flushing components**
- **Delay fill inlet valve - no water waste**
- **17.3029 & 17.001 have pneumatic controlled flush**
- **53.001 has cable controls**

Required minimum operating pressure key

LP1	- 0.1 bar minimum
LP2	- 0.2 bar minimum

73.0002

LP2

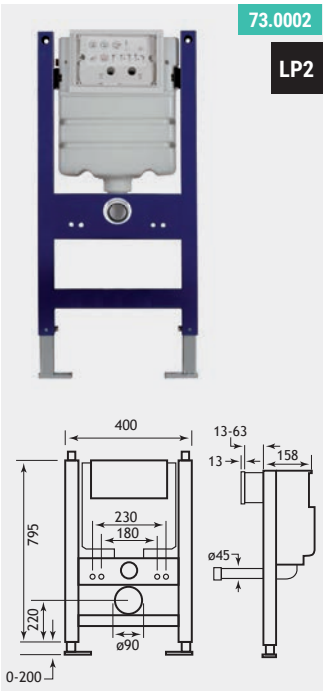

Waste fitting required.

73.0001

LP2

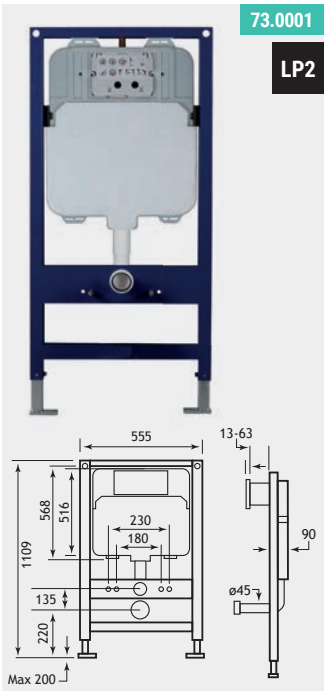

Waste fitting required.

Concealed Cisterns

Description	Code	€ Ex VAT	€ Inc VAT
Concealed Cistern & Frame 1109 x 555 (Wall Hung)	73.0001	362.00	**445.26**
Concealed Cistern & Frame 795 x 400 (Wall Hung)	73.0002	346.00	**425.58**
Concealed Cistern 568 x 445 x 80 (BTW)*	73.0004	160.00	**196.80**
Concealed Cistern 350 x 290 x 150 (BTW)*	73.0005	150.00	**184.50**

Cisterns campatible with Oslo tall cistern units, or built in only.
*A flush plate is required, please see this page for options.

Flush Plates

Description	Code	€ Ex VAT	€ Inc VAT
R Series Flush Plate Chrome	73.0006	52.00	**63.96**
R Series Flush Plate Silver Grey	73.0007	47.00	**57.81**
R Series Flush Plate Chrome/ Black Ring	73.0008	51.00	**62.73**
V Series Flush Plate Chrome	73.0009	52.00	**63.96**
V Series Flush Plate Silver Grey	73.0010	47.00	**57.81**
V Series Flush Plate Black/Chrome Button	73.0011	47.00	**57.81**
W Series Flush Plate Chrome†	73.0013	52.00	**63.96**
W Series Flush Plate Chrome/Colour Buttons	73.0014	51.00	**62.73**

The above flush plates are only compatible with 73 code concealed cisterns.
†While stocks last

FEATURES
- **73. Code cisterns suitable from 0.2 bar**
- **Rod controlled flush**



73.0006



73.0007



73.0008



73.0009



73.0010



73.0011



73.0013



73.0014



Accessories

Add the finishing touches to your bathroom or ensuite with a stylish range of accessories designed to complement your decor.



Contents

Alento range & Davos shelving	206
Solid Brass Baskets	207
Asti Range	208 - 211
Salerno range	212 - 213
Genoa range	214 - 215
Vercelli range	216 - 217
Rimini range	218 - 219
Rockingham range	220 - 221
Wastes	222
Bottle traps, levels, frames & fixings	223

Alento & Davos

ALENTO STAINLESS STEEL ACCESSORIES

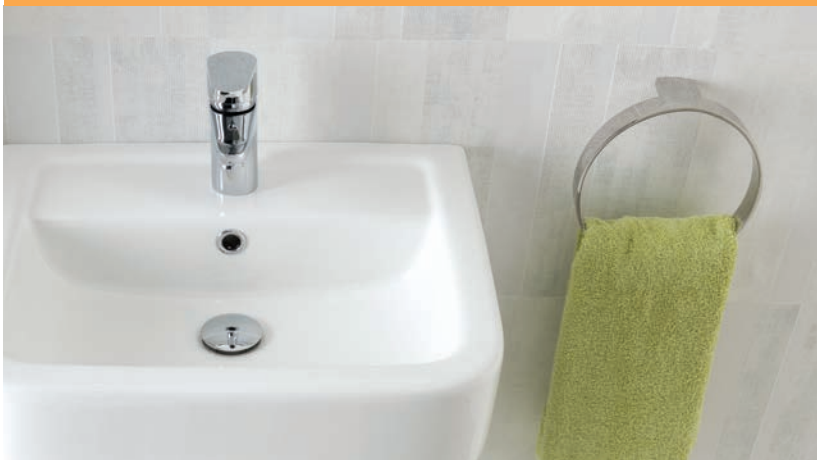

Alento Accessories			
Description	Code	€ Ex VAT	€ Inc VAT
Alento Hook Chrome	46.0000	41.00	**50.43**
Alento Double Hook Chrome	46.0001	75.00	**92.25**
Alento Toilet Roll Holder Chrome	46.0002	90.00	**110.70**
Alento Square Towel Ring Chrome	46.0003	153.00	**188.19**
Alento Round Towel Ring Chrome	46.0004	213.00	**261.99**
Alento Toilet Brush Chrome	46.0005	189.00	**232.47**
Alento Glass Shelf Chrome	46.0006	224.00	**275.52**
Alento 600mm Towel Rail Chrome	46.0007	128.00	**157.44**
Alento 800mm Towel Rail Chrome	46.0008	142.00	**174.66**

FEATURES
- Hidden fixings
- Made of stainless steel
- Chrome polished finish


46.0001


46.0006


46.0005


46.0000


46.0002


46.0007/8


46.0003


46.0004



46.0000

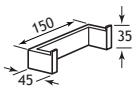

46.0001

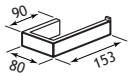

46.0002

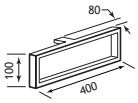

46.0003



46.0004

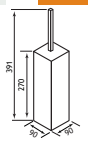

46.0005

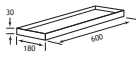

46.0006

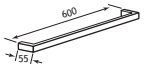

46.0007

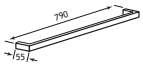

46.0008

DAVOS



Corner Glass Shelves

Description (Width x Depth x Height mm)	Code	€ Ex VAT	€ Inc VAT
Davos corner 320x320x1180 glass shelves	56.1052	425.00	**522.75**


56.1052

Solid Brass Baskets

SOLID BRASS BASKETS


52.213


52.205


52.210


52.202

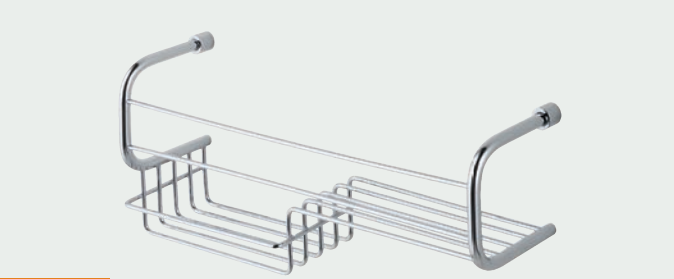
52.207

Solid Brass Baskets				
Description	Dimensions width x projection	Code	€ Ex VAT	€ Inc VAT
Single corner basket	197 x 197 x 76	52.201	70.00	**86.10**
Double corner basket	345 x 195x 195	52.202	154.00	**189.42**
Rectangular wall basket	261 x 120 x 90	52.203	82.00	**100.86**
Double basket	275 x 155 x 310	52.205	178.00	**218.94**
Corner basket	210 x 210 x 110	52.206	91.00	**111.93**
Rectangular basket	360 x 95 x 150	52.207	107.00	**131.61**
Rectangular basket	265 x 125 x 55	52.208	93.00	**114.39**
Rectangular basket	200 x 120 x 45	52.209	82.00	**100.86**
Double corner basket	175 x 175 x 270	52.210	128.00	**157.44**
Corner basket	205 x 205 x 110	52.211	104.00	**127.92**
Double Rectangular hanging basket	275 x 125 x 510	52.213	244.00	**300.12**
Bath Rack	850 x 198 x 91	52.214	269.00	**330.87**

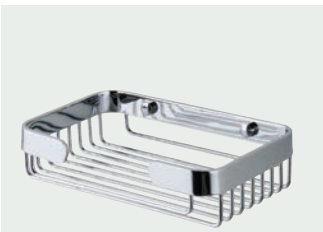
52.209

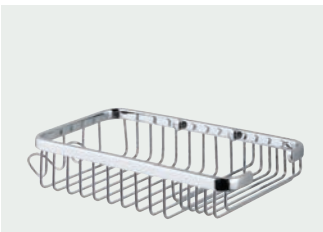
52.208


52.206


52.201


52.203


52.211

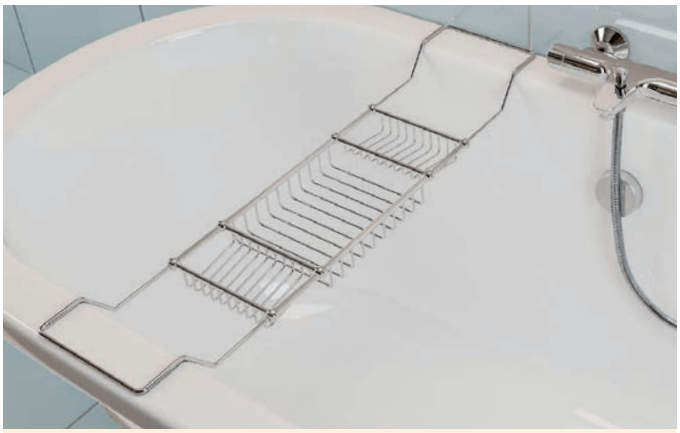

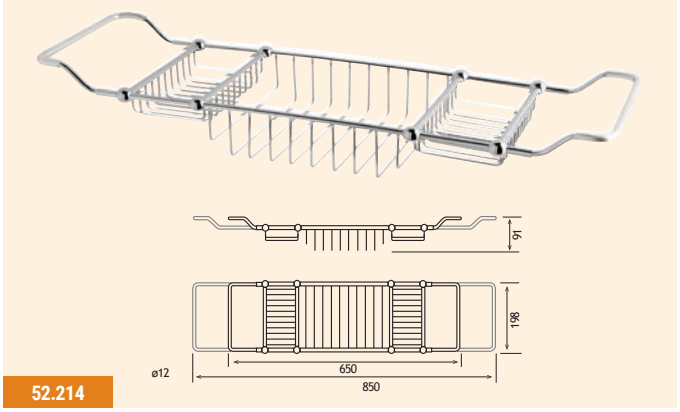

52.214

Asti Range

ASTI ACCESSORIES



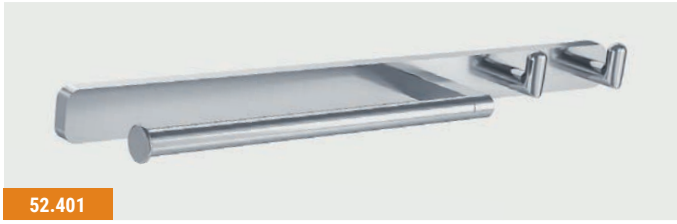

52.401

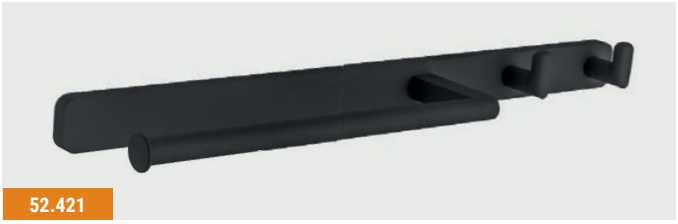

52.421



52.402



52.422



52.403



52.423



52.404



52.424

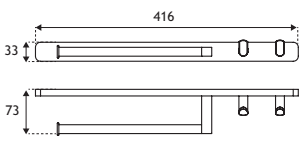

52.401
52.421

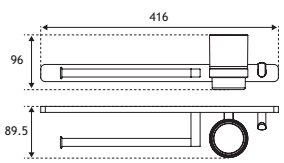

52.402
52.422

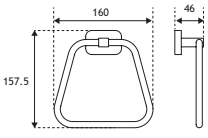

52.403
52.423

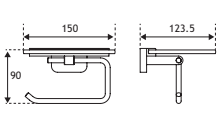

52.404
52.424

Asti Range

ASTI ACCESSORIES

Asti Accessories					
Description	Colour	Dimensions width x projection	Code	€ Ex VAT	€ Inc VAT
Asti Towel Ring and Double Hook	Chrome	416 x 73	52.401	96.00	118.08
Asti Towel Ring and Double Hook	Matt Black	416 x 73	52.421	103.00	126.69
Asti Towel Ring, Hook and Tumbler Holder	Chrome	416 x 90	52.402	96.00	118.08
Asti Towel Ring, Hook and Tumbler Holder	Matt Black	416 x 90	52.422	103.00	126.69
Asti Towel Ring	Chrome	160 x 46	52.403	41.00	50.43
Asti Towel Ring	Matt Black	160 x 46	52.423	44.00	54.12
Asti Toilet Roll Holder with Glass Shelf	Chrome	150 x 124	52.404	75.00	92.25
Asti Toilet Roll Holder with Glass Shelf	Matt Black	150 x 124	52.424	77.00	94.71
Asti Toilet Roll Holder	Chrome	150 x 70	52.405	31.00	38.13
Asti Toilet Roll Holder	Matt Black	150 x 70	52.425	35.00	43.05
Asti Robe Hook Curved	Chrome	58 x 41	52.406	23.00	28.29
Asti Robe Hook Curved	Matt Black	58 x 41	52.426	24.00	29.52
Asti Double Tumbler Holder	Chrome	166 x 84	52.407	59.00	72.57
Asti Double Tumbler Holder	Matt Black	166 x 84	52.427	65.00	79.95
Asti Tumbler Holder	Chrome	67 x 90	52.408	31.00	38.13
Asti Tumbler Holder	Matt Black	67 x 90	52.428	34.00	41.82
Asti Soap Dish Holder	Chrome	110 x 126	52.409	31.00	38.13
Asti Soap Dish Holder	Matt Black	110 x 126	52.429	34.00	41.82

Width & projection measurements all in millimetres.

FEATURES
- Modern, minimalist design
- Made of solid brass
- Meticulously polished to produce mirror-like finish
- Bright chrome finish


52.404


52.405

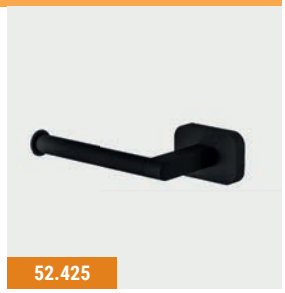
52.425


52.406


52.426


52.407


52.427


52.408


52.428


52.409


52.429

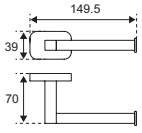

52.405
52.425

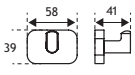

52.406
52.426

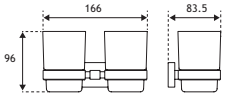

52.407
52.427

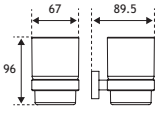

52.408
52.428

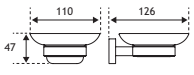

52.409
52.429

Asti Range

ASTI ACCESSORIES





52.413



52.433



52.414



52.434



52.411



52.431



52.418



52.438

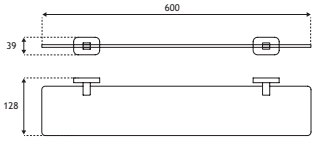

52.413
52.433

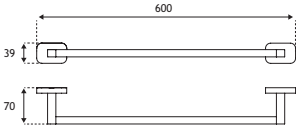

52.414
52.434

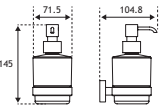

52.411
52.431

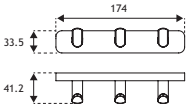

52.418
52.438

Asti Range

ASTI ACCESSORIES

Asti Accessories					
Description	Colour	Dimensions width x projection	Code	€ Ex VAT	€ Inc VAT
Asti Soap Dispenser	Chrome	72 x 105	52.411	69.00	84.87
Asti Soap Dispenser	Matt Black	72 x 105	52.431	72.00	88.56
Asti Toilet Brush Holder	Chrome	113 x 127	52.412	58.00	71.34
Asti Toilet Brush Holder	Matt Black	113 x 127	52.432	62.00	76.26
Asti Glass Shelf	Chrome	600 x 128	52.413	54.00	66.42
Asti Glass Shelf	Matt Black	600 x 128	52.433	56.00	68.88
Asti Towel Rail	Chrome	600 x 70	52.414	70.00	86.10
Asti Towel Rail	Matt Black	600 x 70	52.434	76.00	93.48
Asti Double Towel Rail	Chrome	600 x 120	52.415	111.00	136.53
Asti Double Towel Rail	Matt Black	600 x 120	52.435	117.00	143.91
Asti Double Split Rail	Chrome	407 x 47	52.416	69.00	84.87
Asti Double Split Rail	Matt Black	407 x 47	52.436	72.00	88.56
Asti Towel shelf	Chrome	572 x 220	52.417	276.00	339.48
Asti Towel shelf	Matt Black	572 x 220	52.437	292.00	359.16
Asti Triple robe Hook	Chrome	174 x 42	52.418	54.00	66.42
Asti Triple robe Hook	Matt Black	174 x 42	52.438	56.00	68.88

Width & projection measurements all in millimetres.

FEATURES
- Modern, minimalist design
- Made of solid brass
- Meticulously polished to produce mirror-like finish
- Bright chrome finish


52.412


52.432


52.415


52.435


52.416


52.436

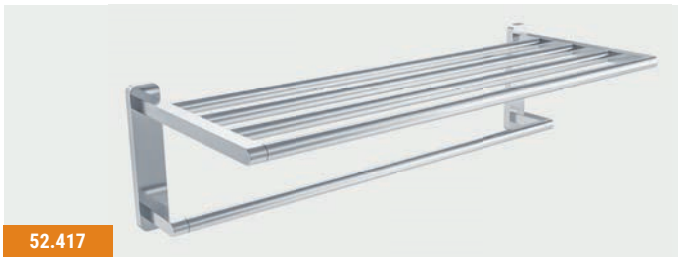
52.417

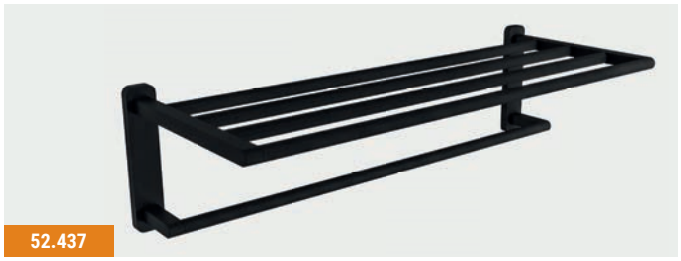
52.437

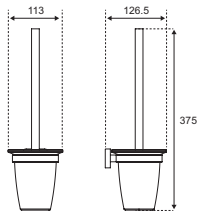

52.412
52.432

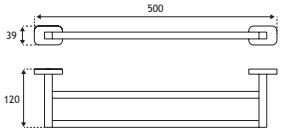

52.415
52.435

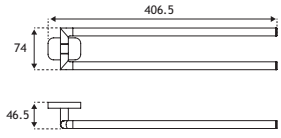

52.416
52.436

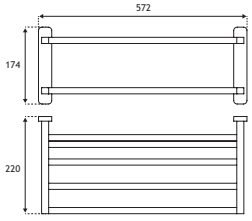

52.417
52.437

Salerno

SALERNO SOLID BRASS ACCESSORIES



FEATURES
- Made of solid brass
- A Choice of a bright chrome finish or matt smooth black
- Meticulously polished to produce mirror-like finish (chrome only)


52.020


52.215


52.021


52.216


52.032


52.220


52.023


52.218


52.025


52.219


52.024

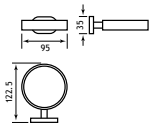

52.020

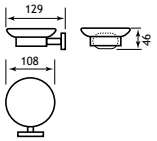

52.021
52.216

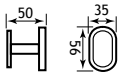

52.022
52.217

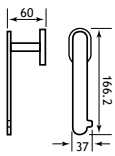

52.023
52.218

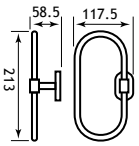

52.024

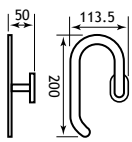

52.025
52.219

SALERNO SOLID BRASS ACCESSORIES


Pictured with Cheverney WC

Salerno Solid Brass Accessories				
Description	Dimensions width x projection	Code	€ Ex VAT	€ Inc VAT
Tumbler Holder	95 x 113	52.020	31.00	**38.13**
Tumbler Holder Matt Smooth Black	95 x 113	52.215	31.00	**38.13**
Soap Dish	108 x 129	52.021	31.00	**38.13**
Soap Dish Matt Smooth Black	108 x 129	52.216	31.00	**38.13**
Robe Hook	56 x 50	52.022	27.00	**33.21**
Robe Hook Matt Smooth Black	56 x 50	52.217	27.00	**33.21**
Toilet Roll Holder	166 x 60	52.023	40.00	**49.20**
Toilet Roll Holder Matt Smooth Black	166 x 60	52.218	40.00	**49.20**
Towel Ring	213 x 118	52.024	44.00	**54.12**
Towel Holder	200 x 50	52.025	59.00	**72.57**
Towel Holder Matt Smooth Black	200 x 50	52.219	59.00	**72.57**
450mm Single Towel Rail	513 x 60	52.026	98.00	**120.54**
Single Towel Rail	666 x 60	52.027	111.00	**136.53**
Single Towel Rail Matt Smooth Black	666 x 60	52.221	128.00	**157.44**
450mm Double Towel Rail	513 x 110	52.028	128.00	**157.44**
600mm Double Towel Rail	666 x 110	52.029	150.00	**184.50**
Towel Rack with Bar	666 x 215	52.030	289.00	**355.47**
Glass Shelf	500 x 115	52.031	59.00	**72.57**
Glass Brush Holder	68 x 109	52.032	49.00	**60.27**
Glass Brush Holder Matt Smooth Black	68 x 109	52.220	49.00	**60.27**

FEATURES
- Made of solid brass
- A Choice of a bright chrome finish or matt smooth black
- Meticulously polished to produce mirror-like finish (chrome only)

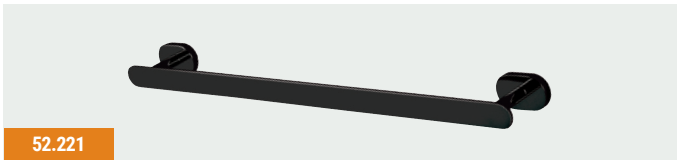
52.221


52.028

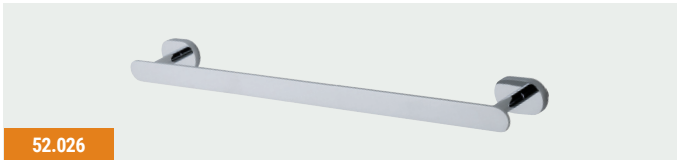
52.026


52.030


52.031

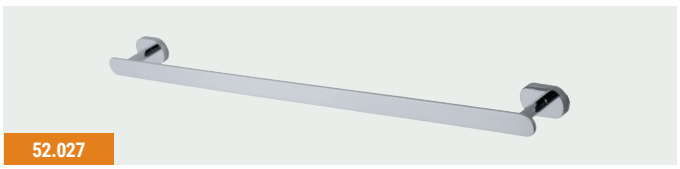
52.027

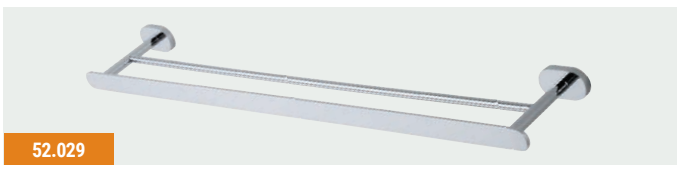
52.029


52.022


52.217

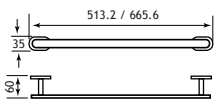

52.026
52.027 / 52.221

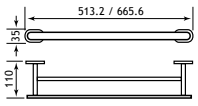

52.028 / 52.029

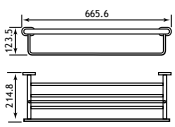

52.030

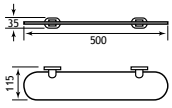

52.031

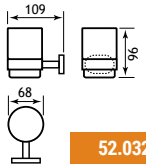

52.032

Genoa

GENOA SOLID BRASS ACCESSORIES



Pictured with Cheverney, see page 180.

FEATURES
- Made of solid brass
- Meticulously polished to produce mirror-like finish
- Bright chrome finish



52.001



52.002



52.003



52.004

Can be freestanding or wall mounted



52.005



52.006



52.007



52.008



52.009



52.010



52.011

Each rail moves independently

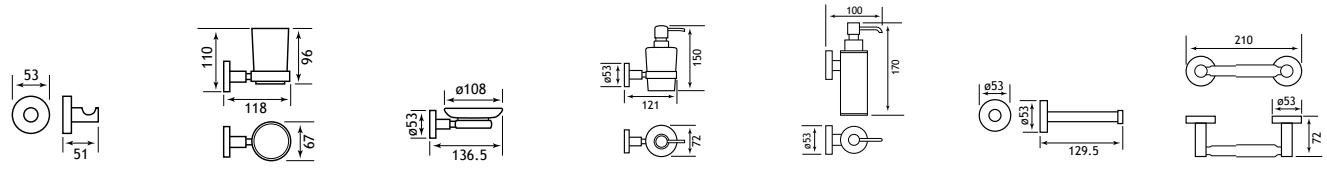

52.001 | 52.002 | 52.003 | 52.004 | 52.005 | 52.006 | 52.007

GENOA SOLID BRASS ACCESSORIES



Pictured with Cheverney basin, see page 139.

Genoa Solid Brass Accessories

Description	Dimensions width x projection	Code	€ Ex VAT	€ Inc VAT
Robe Hook	53 x 51	52.001	28.00	**34.44**
Tumbler Holder	67 x 118	52.002	37.00	**45.51**
Glass Soap Dispenser	72 x 130	52.004	58.00	**71.34**
Toilet Roll Holder	52 x 130	52.006	34.00	**41.82**
Spindle Toilet Roll Holder	210 x 70	52.007	55.00	**67.65**
Metal Brush Holder**	93 diameter	52.013	126.00	**154.98**
Glass Brush Holder	112 x 153	52.012	52.00	**63.96**
Soap Dish	108 x 138	52.003	37.00	**45.51**
Metal Soap Dispenser	52 x 100	52.005	83.00	**102.09**
Double Split Towel Rail*	52 x 420	52.011	54.00	**66.42**
Double Towel Rail	643 x 154	52.010	108.00	**132.84**
Single Towel Rail	643 x 70	52.009	62.00	**76.26**
Glass Shelf with Barrier	596 x 126	52.008	58.00	**71.34**
Metal Towel Ring	190 x 170 x 57	52.014	51.00	**62.73**
Wiper	258 x 55	52.015	44.00	**54.12**
Covered Toilet Roll Holder	142 x 50	52.016	62.00	**76.26**

*Each rail moves independently. **Can be floor standing or wall hanging. If wall hanging projection increases to 106mm. Width measurements are to the outside face of each unit i.e. to the end of the brackets where applicable.

FEATURES
- Made of solid brass
- Meticulously polished to produce mirror-like finish
- Bright chrome finish



52.012

Can be freestanding or wall mounted



52.013



52.014



52.015

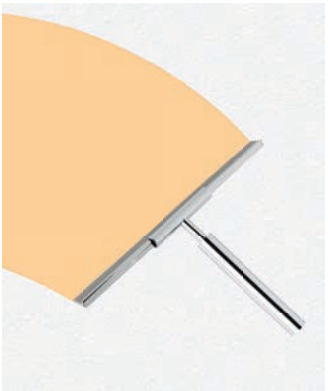

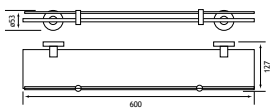

52.008

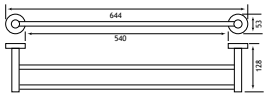

52.010

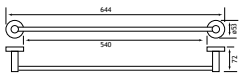

52.009

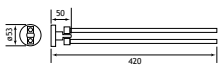

52.011

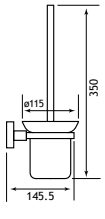

52.012

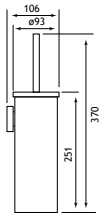

52.013

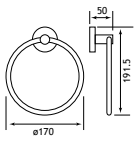

52.014

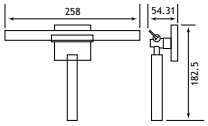

52.115

Vercelli

Vercelli Accessories				
Description	**Dimensions width x projection**	**Code**	**€ Ex VAT**	**€ Inc VAT**
Vercelli Toilet Roll Holder	128 x 83	52.301	47.00	**57.81**
Vercelli Toilet Roll Holder with Leather shelf	158 x 98	52.302	146.00	**179.58**
Vercelli Robe Hook	25 x 39	52.303	23.00	**28.29**
Vercelli Robe Hook Chrome	25 x 32	52.304	21.00	**25.83**
Vercelli Double Robe hook	83 x 32	52.305	28.00	**34.44**
Vercelli Tumbler Holder	75 x 95	52.306	52.00	**63.96**
Vercelli Soap Dish Holder	104 x 110	52.307	52.00	**63.96**
Vercelli Soap Dispenser	75 x 95	52.308	80.00	**98.40**
Vercelli Toilet Brush Holder	75 x 95	52.309	75.00	**92.25**
Vercelli Towel Ring	200 x 83	52.311	58.00	**71.34**
Vercelli Glass Shelf	600 x 119	52.312	143.00	**175.89**
Vercelli Towel Rack with bar	600 x 210	52.315	335.00	**412.05**

Width & projection measurements all in millimetres.

FEATURES
- Modern, minimalist design
- Made of solid brass
- Bright chrome finish
- Meticulously polished to produce mirror-like finish


52.302


52.305 (x2)


52.303


52.304


52.305


52.302


52.301


52.311

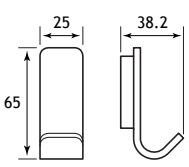

52.303

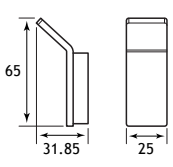

52.304

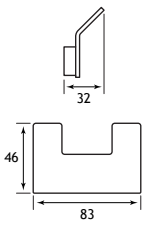

52.305

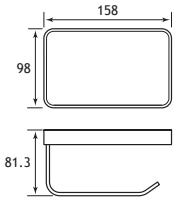

52.302

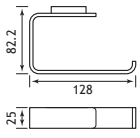

52.301

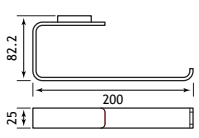

52.311

Vercelli


52.311
52.306
52.312


52.309


52.306


52.308


52.307


52.312

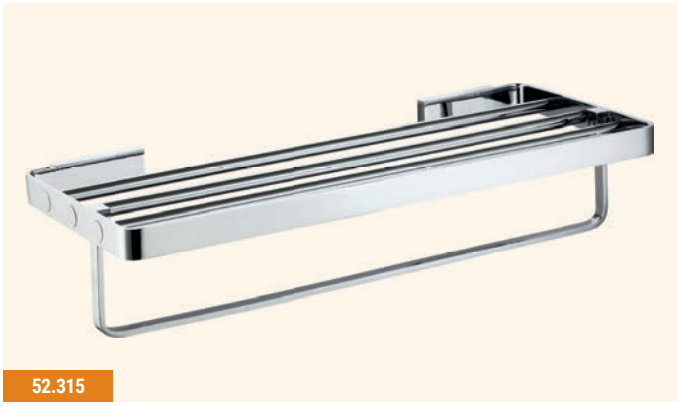
52.315

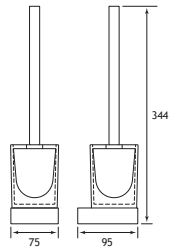
344
75
95
52.309

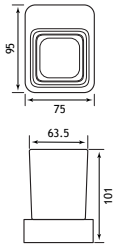
95
75
63.5
101
52.306

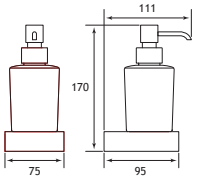
111
170
75
95
52.308

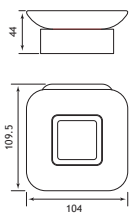
44
109.5
104
52.307

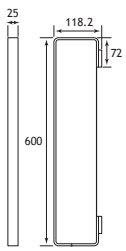
25
118.2
72
600
52.312

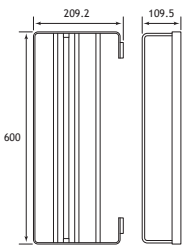
209.2
109.5
600
52.315

Rimini

Rimini Solid Brass				
Description	**Dimensions width x projection**	**Code**	**€ Ex VAT**	**€ Inc VAT**
Robe Hook	52 x 55	52.101	30.00	**36.90**
Tumbler Holder	67 x 118	52.102	40.00	**49.20**
Glass Soap Dispenser	72 x 130	52.104	66.00	**81.18**
Toilet Roll Holder	141 x 51	52.106	34.00	**41.82**
Spindle Toilet Roll Holder	207 x 72	52.107	56.00	**68.88**
Glass Brush Holder	115 x 155	52.112	56.00	**68.88**
Metal Brush Holder**	93 x 107	52.113	135.00	**166.05**
Soap Dish	110 x 141	52.103	40.00	**49.20**
Metal Soap Dispenser	52 x 100	52.105	89.00	**109.47**
Double Split Towel Rail*	52 x 420	52.111	55.00	**67.65**
Double Towel Rail	643 x 129	52.110	131.00	**161.13**
Single Towel Rail	640 x 71	52.109	73.00	**89.79**
Glass Shelf with Barrier	600 x 125	52.108	66.00	**81.18**
Metal Towel Ring	165 x 162 x 50	52.114	55.00	**67.65**
Wiper	258 x 55	52.115	73.00	**89.79**
Covered Toilet Roll Holder	142 x 50	52.116	66.00	**81.18**

*Each rail moves independently. **Can be floor standing or wall hanging. If wall hanging projection increases to 106mm. Width measurements are to the outside face of each unit i.e. to the end of the brackets where applicable.

FEATURES
- Made of solid brass
- Meticulously polished to produce mirror-like finish
- Bright chrome finish


52.106


52.114

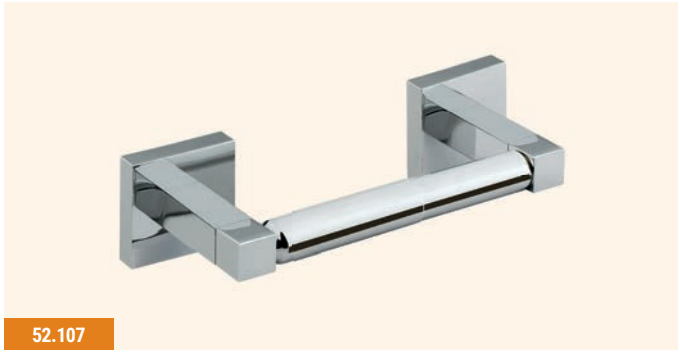
52.107


52.101


52.103


52.102


52.104

Can be freestanding or wall mounted


52.105

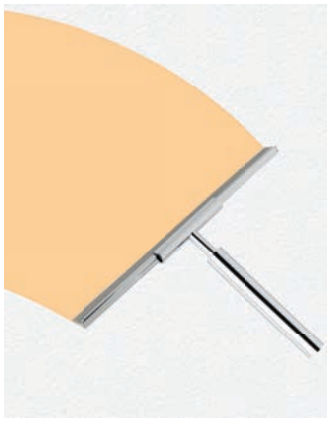


52.115

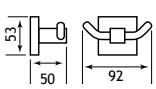

52.101

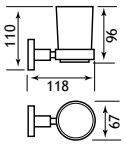

52.102

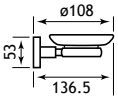

52.103

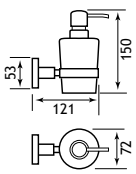

52.104

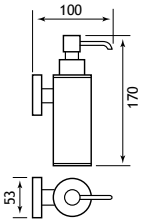

52.105

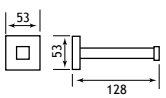

52.106

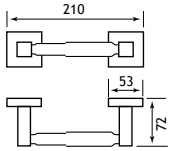

52.107

RIMINI SOLID BRASS ACCESSORIES



Pictured with Cheverney basin, see page 184.

Can be freestanding or wall mounted



52.112



52.113

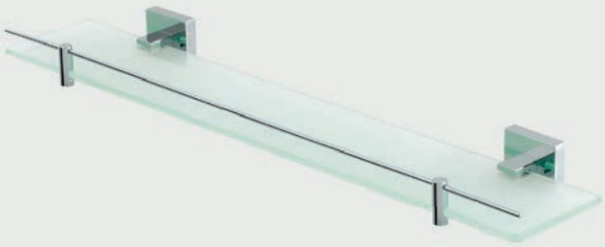

52.108



52.110



52.109



52.111

Each rail moves independently

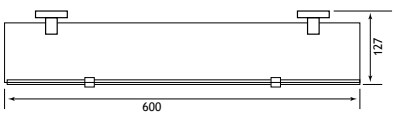

52.108

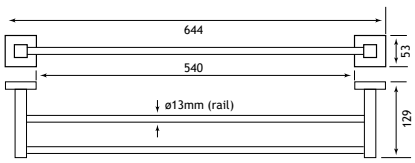

52.110

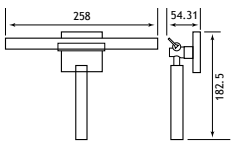

52.115

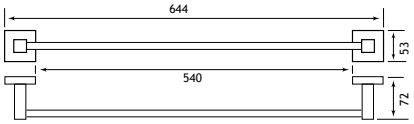

52.109

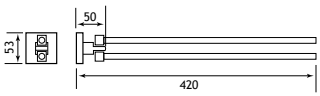

52.111

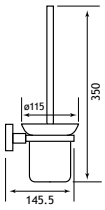

52.112

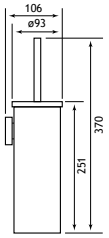

52.113

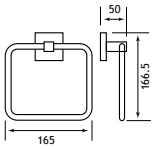

52.114

Rockingham

Rockingham Solid Brass			
Description	**Code**	**€ Ex VAT**	**€ Inc VAT**
Rockingham Robe Hook	52.040	58.00	**71.34**
Rockingham Tumbler Holder	52.041	90.00	**110.70**
Rockingham Double Tumbler Holder	52.042	126.00	**154.98**
Rockingham Soap Dish	52.043	90.00	**110.70**
Rockingham Towel Ring	52.044	83.00	**102.09**
Rockingham Toilet Roll Holder	52.045	96.00	**118.08**
Rockingham Single Towel Rail	52.046	126.00	**154.98**
Rockingham Double Towel Rail	52.047	209.00	**257.07**
Rockingham Towel Shelf	52.048	360.00	**442.80**
Rockingham Glass Shelf with Barrier	52.049	136.00	**167.28**
Rockingham Toilet Brush Holder	52.050	117.00	**143.91**
Rockingham Covered Toilet Roll Holder	52.051	104.00	**127.92**

FEATURES
- Constructed from solid brass
- Polished chrome finish
- Traditional design
- Easy to fit


52.040


52.041


52.050




52.043


52.042


52.044

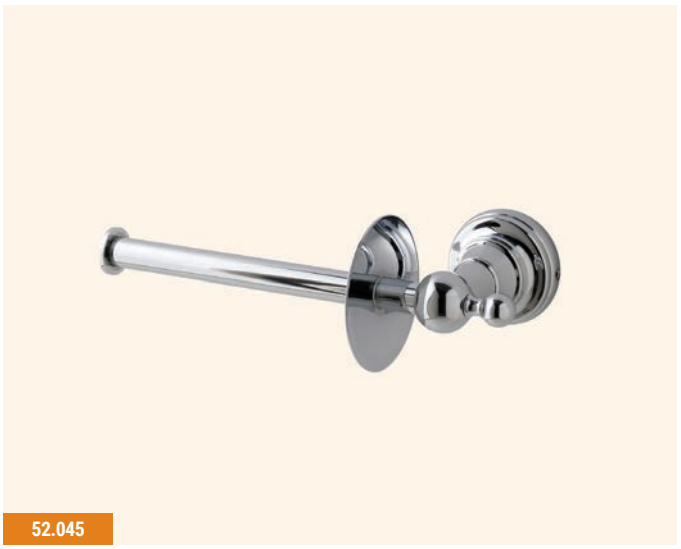
52.045


52.051

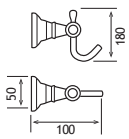

52.040

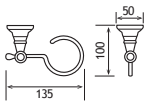

52.041

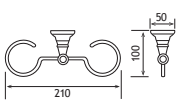

52.042

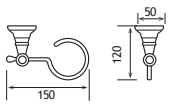

52.043

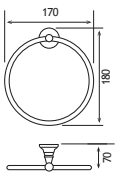

52.044

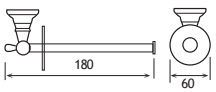

52.045

ROCKINGHAM SOLID BRASS ACCESSORIES



52.046



52.047



52.048

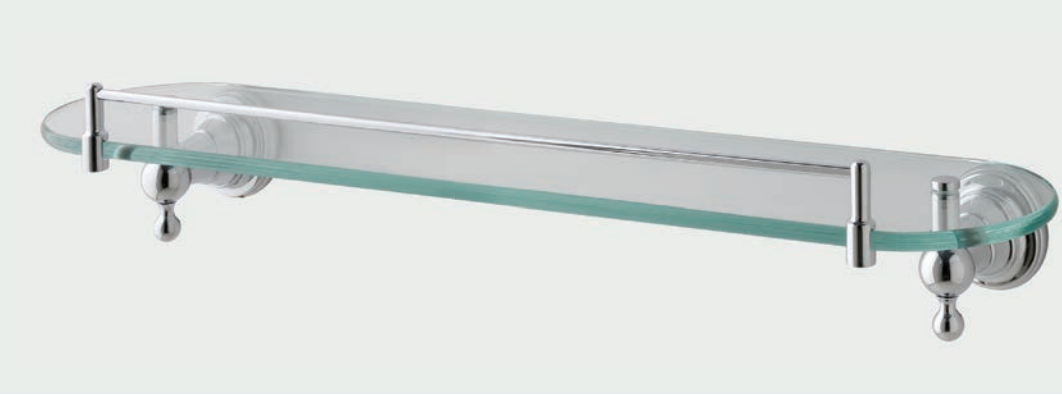

52.049

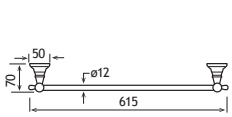

52.046

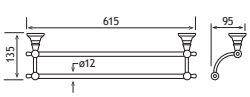

52.047

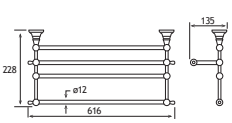

52.048

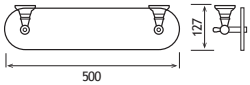

52.049

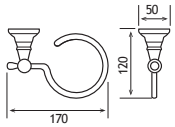

52.050

Waste Range

Bath Wastes			
Description (Chrome)	Code	€ Ex VAT	€ Inc VAT
Exposed bath pop up waste Chrome	25.0001	213.00	**261.99**
Luxury bath pop up waste & overflow Chrome	25.0003	58.00	**71.34**
Luxury Bath Pop-up Waste + Overflow Chrome	41.2008	75.00	**92.25**
Bath Pop Up Waste & Overflow Chrome	56.2071	52.00	**63.96**
Superior Bath Pop Up Waste & Overflow Chrome	56.2072	56.00	**68.88**
Extended Bath Pop-up Waste & Overflow	98.0008	54.00	**66.42**

Bath Wastes			
Description (Chrome)	Code	€ Ex VAT	€ Inc VAT
Bath Combined Waste & Overflow Chrome	41.2009	34.00	**41.82**
Push button bath waste and overflow Chrome	7.0011	111.00	**136.53**
Square Sprung Plug Bath Waste	98.0006	59.00	**72.57**
Ceramic Top Bath Waste White	45.0001	80.00	**98.40**
Flipper Bath Waste Chrome	25.0007	54.00	**66.42**


25.0003


41.2008


56.2071


56.2072


98.0008


41.2009


7.0011


98.0006


45.0001


25.0007

Basin Wastes			
Description (Chrome)	Code	€ Ex VAT	€ Inc VAT
Push button basin waste Chrome	25.0002	31.00	**38.13**
Push button basin waste Chrome	56.2073	42.00	**51.66**
Push button basin waste Chrome	41.2010	59.00	**72.57**
Flip top basin waste - unslotted Chrome	25.0005	27.00	**33.21**
Flip top basin waste - slotted Chrome	25.0006	27.00	**33.21**
Ceramic Top Basin Waste White	45.0000	37.00	**45.51**

Other Wastes			
Description (Chrome)	Code	€ Ex VAT	€ Inc VAT
Contract Sink Waste	4.5213*	13.00	**15.60**
*While stocks last.			


25.0002


56.2073


41.2010


98.0007


25.0006


45.0000


25.0005


4.1032


98.0002


98.0003


4.5213


45.0000

Bottle Traps, Levers, Frames & Fixings

Bottle Traps

Description	Code	€ Ex VAT	€ Inc VAT
1.25" Bottle Trap inc Extender Tube	98.0017	58.00	**71.34**
Square Bottle Trap and Extension Tube	93.0050	98.00	**120.54**
Minimalist Bottle Trap	93.0065	55.00	**67.65**



98.0017



93.0050



93.0065

Levers

Description	Code	€ Ex VAT	€ Inc VAT
Metal Universal WC Lever	98.0011	20.00	**24.60**
Ceramic Handle WC Lever	98.0012	24.00	**29.52**



98.0011



98.0012

Frames & Fixings

Description	Code	€ Ex VAT	€ Inc VAT
Wall Hung pan/bidet brackets -	21.149B	266.00	**327.18**
Mirage frame 310 x 345 -	73.0003	219.00	**269.37**
L-Shape wall hung pan/bidet brackets	90.0010	107.00	**131.61**

Description	Code	€ Ex VAT	€ Inc VAT
Fischer Bolts Set - basin to Wall -	9.201	26.00	**31.98**
Fischer bolts set - pan to floor - top fixing -	9.202	20.00	**24.60**
Fischer cloakroom/corner basin brackets -	9.203	27.00	**33.21**
Fischer bolts set - pan to floor - side fixing -	9.204	34.00	**41.82**



21.149b



73.0003



90.0010


1950

Vanity

Units both stylish and practical, many with soft close systems on doors and drawers. New polymarble basin tops give opportunities to create a clean, modern & stylish impression.



Contents	
Bonito Range	226 - 227
Bonito Slab	228 - 231
Bonito Corner Units	232
Castilla Drawer	233
Cavone Units	234 - 247
Diamante Units	248 - 249
Faro Vanity Units	250 - 253
Gravina Vanity Units	254 - 255
Hardwick Vanity Units	256 - 263
Madrid Vanity Units	264 - 267
Oslo Vanity Units	268 - 287
Oslo Max	288
Oslo Combination Unit	289 - 293
Oslo Semi Recessed & Slimline	294 - 295
Oslo Tall Cistern Unit	296 - 298
Oslo Reduced Depth	299
Oslo Wall Hung	300 - 302
Seville Tableau	303 - 304
Sorrento Slab Units	305 - 307
Sorrento Vanity Units	308 - 310
Sorrento Wall-Hung Basins & Units	311 - 318
Sherwood Vanity Units	319
Bath Panels	320 - 321
Diamante Bath Panels	322
Seats	323

Bonito 120 Range

BONITO 120 UNITS



Bonito 120 White Gloss combination with Bonito 120 cast top (left or right handed). The 60cm cornice has two LED lamps and a shaver socket.

1200mm Bonito Unit

Size	Code	€ Ex VAT	€ Inc VAT
Bonito 60cm WC unit**	1.029	474.00	**583.02**
Bonito 60cm basin unit**	1.028	427.00	**525.21**
Bonito 120cm plinth (height 70mm)	1.039	35.00	**43.05**
Bonito cast cut out panel	1.062	51.00	**62.73**
Bonito 120 cast top LH	51.001	474.00	**583.02**
Bonito 120 cast top RH	51.002	474.00	**583.02**
Bonito 60cm wall unit - door	1.034	362.00	**445.26**
Bonito 60cm mirror †	1.036	210.00	**258.30**
Diamante 60cm Cornice	1.204	317.00	**389.91**
Vantage Plain Hidden Cistern CP Push Button	17.001	252.00	**309.96**
Eastbrook Jacket Hidden Cistern - Bottom Inlet	53.001	157.00	**193.11**
Vantage Hidden Cistern with Jacket	17.3029	290.00	**356.70**

† NB. mirror must be fitted with cornice. *7.0015 trap and unslotted basin waste recommended for installation, see below for details. **Plinth must be ordered separately.

Basin Unit

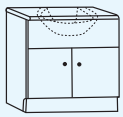

The upper panel is supplied uncut (for semi recessed basin)

1.028 / 1.037

Width	Depth	Height
600mm	305mm	800mm

*Height excluding countertop and basin

Wall Cupboard

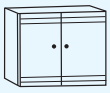

with two doors

1.034

Width	Depth	Height
600mm	176mm	700mm

Base Unit with Drawer



All drawers have metal runners and all doors have metal adjustable hinges. RH shown

Left Hand -1.031 (OR) Right Hand - 1.030

Width	Depth	Height
300mm	305mm	800mm

*excluding countertop

Concealed Cistern WC unit

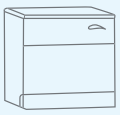

With two removable fascia panels. The panels are not pre-drilled or cut (for greater flexibility when fitting)

1.029 / 1.037

Width	Depth	Height
600mm	305mm	800mm

*Height excluding countertop and basin

Wall Cupboard



1.032 (reversible)

Width	Depth	Height
300mm	176mm	700mm

Mirror & Cornice

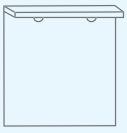

With LED lamps and pull-cord operation

1.036 (mirror) / 1.204 (cornice)

Width		Height
600mm		800mm

*Cornice sold separtely

Extras

Description	Code	€ Ex VAT	€ Inc VAT
Trap for external overflow kit	7.0015	34.00	**41.82**
Flip Top Basin Waste - Unslotted	25.0005	27.00	**33.21**

Spares

Description	Code	€ Ex VAT	€ Inc VAT
Bonito 60cm upper panel	1.043	133.00	**163.59**
Bonito 60cm Lower panel	1.044	133.00	**163.59**
Bonito/Madrid Handle	1.925	18.00	**21.60**

FEATURES
- Separate shaver socket

CAST MARBLE TOPS
- Made of 75% natural marble stone
- Repairable if chipped
- Seamless surface, easy to maintain

51.001

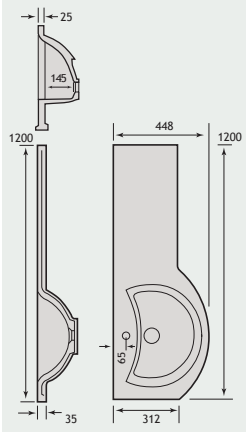

51.002

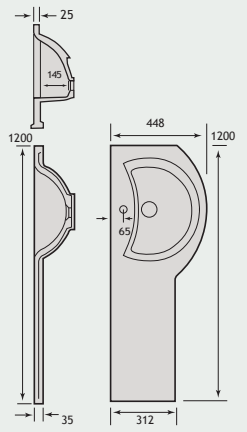

Bonito 120 Range

Bonito with laminate top

BONITO 120 UNITS

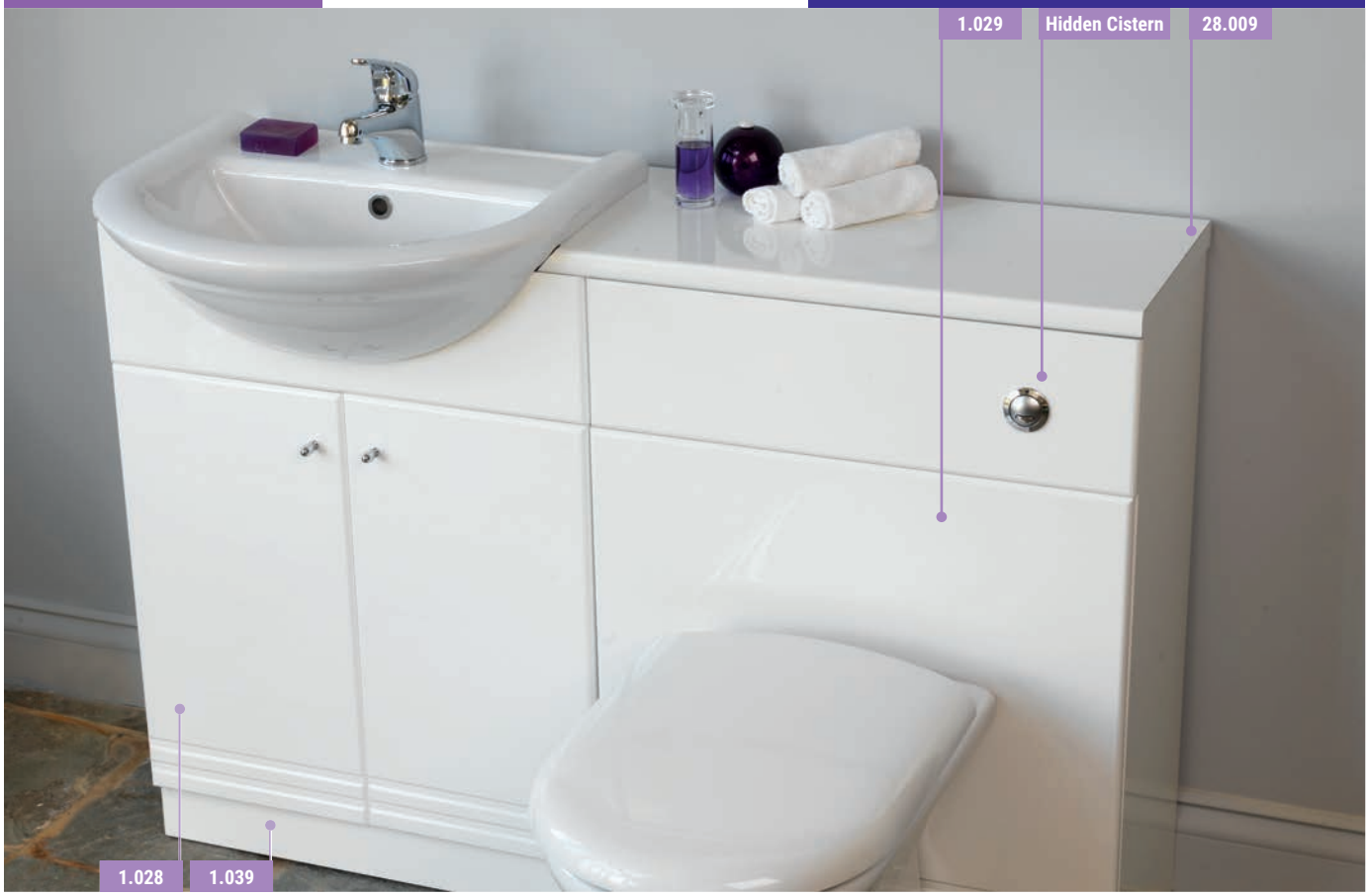

Bonito 120 White Gloss with laminate top. There are numerous combinations using laminate tops and optional 300mm left and right hand base units with corresponding 300mm wall cupboards.

We offer a wide range of other sanitaryware options to suit most tastes. Refer to the sanitaryware section for many different designs on back to wall WC pans and semi recessed basins.

Bonito Range Of Fitted Bathroom Furniture

Description	Code	€ Ex VAT	€ Inc VAT
Bonito 60cm basin unit **	1.028	427.00	**525.21**
Bonito 60cm WC unit **	1.029	474.00	**583.02**
Bonito 30cm RH base drawer unit	1.030	262.00	**322.26**
Bonito 30cm LH base drawer unit	1.031	262.00	**322.26**
Bonito 30cm wall unit - door	1.032	209.00	**257.07**
Bonito 60cm wall unit - door	1.034	362.00	**445.26**
Bonito 60cm mirror	1.036	210.00	**258.30**
Diamante 60cm Cornice	1.204	317.00	**389.91**
Bonito 30cm plinth (height 70mm)	1.011	28.00	**34.44**
Bonito 60cm plinth (height 70mm)	1.037	31.00	**38.13**
Bonito 90cm plinth (height 70mm)	1.038	34.00	**41.82**
Bonito 120cm plinth (height 70mm)	1.039	35.00	**43.05**
Bonito 150cm plinth (height 70mm)	1.040	41.00	**50.43**
Bonito 180cm plinth (height 70mm)	1.041	44.00	**54.12**
Plain infill panel 30 x 81cm	1.042	124.00	**152.52**
Vantage Plain Hidden Cistern CP Push Button	17.001	252.00	**309.96**
Eastbrook Jacket Hidden Cistern - Bottom Inlet	53.001	157.00	**193.11**
Vantage Hidden Cistern with Jacket	17.3029	290.00	**356.70**

NB White mirrors are supplied with chrome shrouds around LED lights.
All handles chrome.**Plinth must be ordered separately.

Bonito WC Unit And White Gloss Top

Description	Code	€ Ex VAT	€ Inc VAT
Bonito 600mm MDF WC cover	1.063	97.00	**119.31**
Bonito 60cm WC unit	1.029	474.00	**583.02**
Bonito 60cm plinth (height 70mm)	1.037	31.00	**38.13**
Vantage Plain Hidden Cistern CP Push Button	17.001	252.00	**309.96**
Eastbrook Jacket Hidden Cistern - Bottom Inlet	53.001	157.00	**193.11**
Vantage Hidden Cistern with Jacket	17.3029	290.00	**356.70**

Laminate Tops: 28MM Thickness, Gloss White

Description	Code	€ Ex VAT	€ Inc VAT
Laminate Tops Gloss 1000 x 310 mm	28.006	103.00	**126.69**
Laminate Tops Gloss 1200 x 310mm	28.009	118.00	**145.14**
Laminate Tops Gloss 1500 x 310 mm	28.007	118.00	**145.14**
Laminate Tops Gloss 2000 x 310 mm	28.008	199.00	**244.77**



Bonito WC with White Gloss wooden top

Check List ✓

Units	Tops - cast (51.001/2) + (1.062)	Tops - semi recessed basin + (28.006/9/7/8)	Plinths	Hidden cistern	BTW pan	Taps	Cornice	Wall Cupboards
●	●	●	●	●	●	●	●	●

Bonito Slab Range

BONITO SLAB UNITS



Bonito Slab Tall Cupboard

Description	Code	€ Ex VAT	€ Inc VAT
Bonito 30cm tall cupboard, 2 door with drawer LH*	1.296	622.00	**765.06**
Bonito 30cm tall cupboard, 2 door with drawer RH*	1.297	622.00	**765.06**
Bonito 30cm tall cupboard, 2 door LH*	1.295	566.00	**696.18**
Bonito 30cm tall cupboard, 2 door RH*	1.299	566.00	**696.18**

*Plinth must be ordered separately

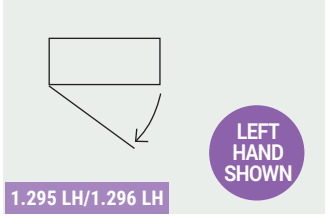

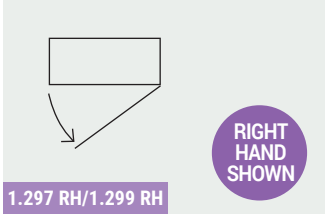

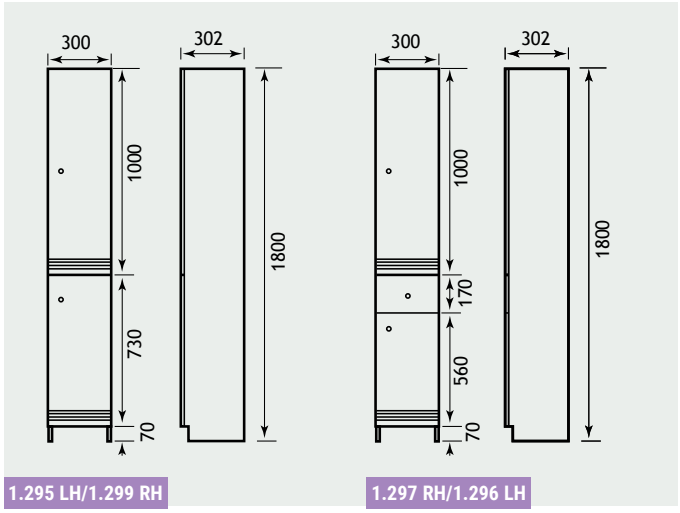

Bonito Slab Range

WALL UNITS & MIRRORS

Mirror - 1.036
Cornice 1.204

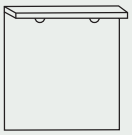

FEATURES
- Separate shaver socket

Mirror (1.036) & CORNICE (1.204) with pull-cord operation

W: 600mm • H 700mm

Description	Code	€ Ex VAT	€ Inc VAT
Bonito 60cm mirror*	1.036	210.00	**258.30**
Diamante 60cm Cornice	1.204	317.00	**389.91**

*Cornice sold separately

*Mirror must be fitted with 1.204 cornice.

Wall Unit - 1.032



300mm WALL CUPBOARD (1.032) (reversible)

W: 300mm • D: 176mm • H: 700mm

Description	Code	€ Ex VAT	€ Inc VAT
Bonito 30cm wall unit - door	1.032	209.00	**257.07**

All handles chrome.

Wall Unit - 1.034

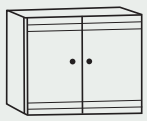

600mm WALL CUPBOARD (1.034) with two doors

W: 600mm • D: 176mm • H: 700mm

Description	Code	€ Ex VAT	€ Inc VAT
Bonito 60cm wall unit - door	1.034	362.00	**445.26**

All handles chrome.

TOPS

Description	Code	€ Ex VAT	€ Inc VAT
Bonito Single basin top	51.018	353.00	434.19
Bonito Slab top 600	51.021	173.00	212.79
Bonito Slab top 900	51.020	226.00	277.98
Bonito Slab top 1200	51.019	297.00	365.31
Trap for external overflow kit	7.0015	34.00	41.82
Flip Top Basin Waste - Unslotted	25.0005	27.00	33.21

*Due to depth of the waste area, the trap for external overflow kit & a flip top basin waste (unslotted) are recommended for installation.

FEATURES - Cast Marble Tops
- Made of 75% natural marble stone
- Repairable if chipped
- Seamless surface, easy to maintain

51.018

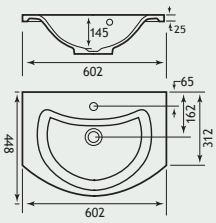

51.020

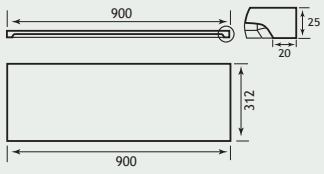

51.021

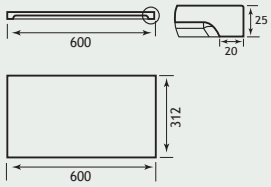

51.019

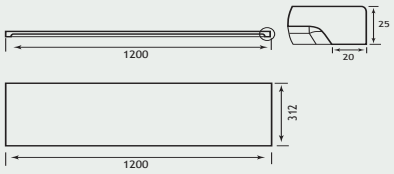

BASE UNITS

Concealed Cistern WC Unit - 1.029

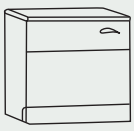

Concealed Cistern WC unit (1.029) with two removable fascia panels. The panels are not pre-drilled or cut (for greater flexibility when fitting)

W: 600mm • D 305mm • H 800mm**

Description	Code	€ Ex VAT	€ Inc VAT
Bonito 60cm base cupboard with drawer*	1.029	474.00	**583.02**

*Plinth must be ordered separately
**Excluding countertop and basin

Basin Unit - 1.028

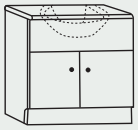

Upper panel is supplied uncut (for semi recessed basin).

W: 600mm • D 305mm • H 800mm**

Description	Code	€ Ex VAT	€ Inc VAT
Bonito 60cm basin unit*	1.028	427.00	**525.21**

*Plinth must be ordered separately
**Height measurement excluding countertop

Base Unit - 1.030/031

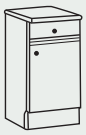

300mm Base Unit (1.030/031) with drawer (order LH or RH). All drawers have metal runners and all doors have metal adjustable hinges. RH shown

W: 300mm • D 305mm • H 800mm**

Description	Code	€ Ex VAT	€ Inc VAT
Bonito 30cm RH base drawer unit*	1.030	262.00	**322.26**
Bonito 30cm LH base drawer unit*	1.031	262.00	**322.26**

*Plinth must be ordered separately
**Height measurement excluding countertop

Base Unit - 1.298



W: 600mm • D 305mm • H 800mm**

Description	Code	€ Ex VAT	€ Inc VAT
Bonito 60cm base cupboard with drawer*	1.298	439.00	**539.97**

*Plinth must be ordered separately
**Height measurement excluding countertop

1.062

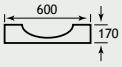

1.042

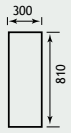

Cast Panel & Plain Infill

Description	Code	€ Ex VAT	€ Inc VAT
Bonito cast cut out panel	1.062	51.00	**62.73**
Plain infill panel 30 x 81cm	1.042	124.00	**152.52**

Extras

Description	Code	€ Ex VAT	€ Inc VAT
Vantage Plain Hidden Cistern CP Push Button	17.001	252.00	**309.96**
Eastbrook Jacket Hidden Cistern - Bottom Inlet	53.001	157.00	**193.11**
Vantage Hidden Cistern with Jacket	17.3029	290.00	**356.70**

Plinths

Description	Code	€ Ex VAT	€ Inc VAT
30cm plinth (height 70mm)	1.011	28.00	**34.44**
60cm plinth (height 70mm)	1.037	31.00	**38.13**
90cm plinth (height 70mm)	1.038	34.00	**41.82**
120cm plinth (height 70mm)	1.039	35.00	**43.05**
150cm plinth (height 70mm)	1.040	41.00	**50.43**
180cm plinth (height 70mm)	1.041	44.00	**54.12**

Bonito Slab Range

BONITO SLAB UNITS



Description	Code	€ Ex VAT	€ Inc VAT
Bonito 30cm tall cupboard, 2 door with drawer LH*	1.296	622.00	**765.06**
Bonito 30cm tall cupboard, 2 door with drawer RH*	1.297	622.00	**765.06**
Bonito 30cm tall cupboard, 2 door LH*	1.295	566.00	**696.18**
Bonito 30cm tall cupboard, 2 door RH*	1.299	566.00	**696.18**

*Plinth must be ordered separately



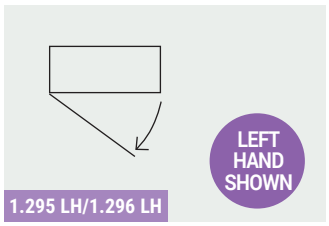

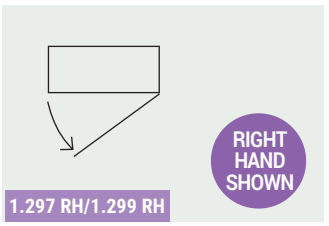

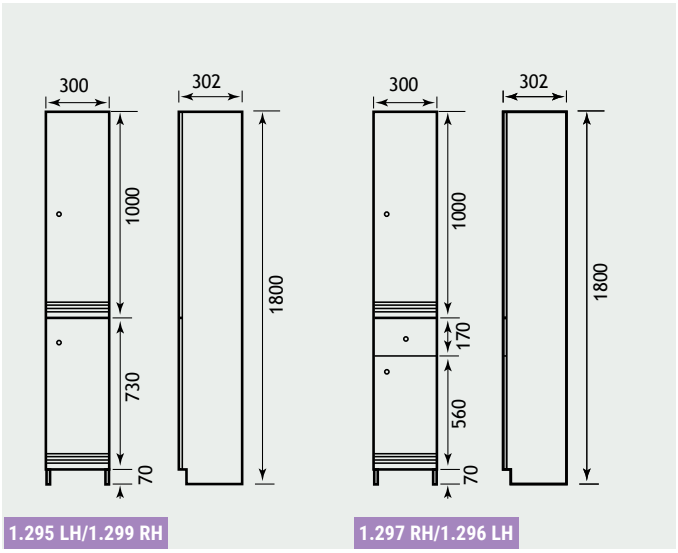

Bonito Slab Range

WALL UNITS & MIRRORS

Mirror - 1.036
Cornice 1.204

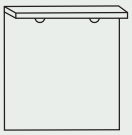

FEATURES
- Separate shaver socket

Mirror (1.036) & CORNICE (1.204) with pull-cord operation

W: 600mm • H 700mm

Description	Code	€ Ex VAT	€ Inc VAT
Bonito 60cm mirror*	1.036	210.00	**258.30**
Diamante 60cm Cornice	1.204	317.00	**389.91**

*Cornice sold separately

*Mirror must be fitted with 1.204 cornice.

Wall Unit - 1.032



300mm WALL CUPBOARD (1.032) (reversible)

W: 300mm • D: 176mm • H: 700mm

Description	Code	€ Ex VAT	€ Inc VAT
Bonito 30cm wall unit - door	1.032	209.00	**257.07**

All handles chrome.

Wall Unit - 1.034

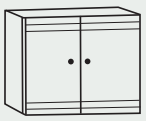

600mm WALL CUPBOARD (1.034) with two doors

W: 600mm • D: 176mm • H: 700mm

Description	Code	€ Ex VAT	€ Inc VAT
Bonito 60cm wall unit - door	1.034	362.00	**445.26**

All handles chrome.

TOPS

Description	Code	€ Ex VAT	€ Inc VAT
Bonito Single basin top	51.018	353.00	**434.19**
Bonito Slab top 600	51.021	173.00	**212.79**
Bonito Slab top 900	51.020	226.00	**277.98**
Bonito Slab top 1200	51.019	297.00	**365.31**
Trap for external overflow kit	7.0015	34.00	**41.82**
Flip Top Basin Waste - Unslotted	25.0005	27.00	**33.21**

*Due to depth of the waste area, the trap for external overflow kit & a flip top basin waste (unslotted) are recommended for installation.

FEATURES - Cast Marble Tops
- Made of 75% natural marble stone
- Repairable if chipped
- Seamless surface, easy to maintain

51.018

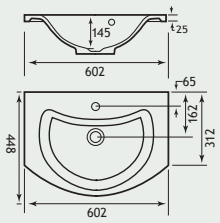

51.020

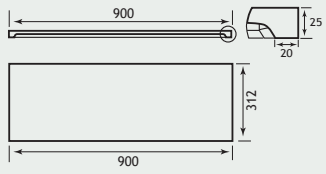

51.021

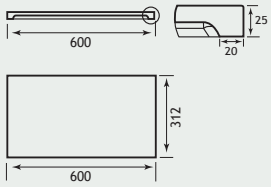

51.019

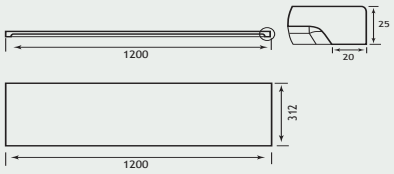

BASE UNITS

Concealed Cistern WC Unit - 1.029

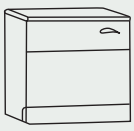

Concealed Cistern WC unit (1.029) with two removable fascia panels. The panels are not pre-drilled or cut (for greater flexibility when fitting)

W: 600mm • D 305mm • H 800mm**

Description	Code	€ Ex VAT	€ Inc VAT
Bonito 60cm WC unit*	1.029	474.00	**583.02**

*Plinth must be ordered separately
**Excluding countertop and basin

Basin Unit - 1.028

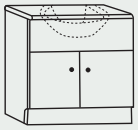

Upper panel is supplied uncut (for semi recessed basin).

W: 600mm • D 305mm • H 800mm**

Description	Code	€ Ex VAT	€ Inc VAT
Bonito 60cm basin unit*	1.028	427.00	**525.21**

*Plinth must be ordered separately
**Height measurement excluding countertop

Base Unit - 1.030/031

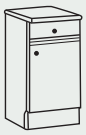

300mm Base Unit (1.030/031) with drawer (order LH or RH). All drawers have metal runners and all doors have metal adjustable hinges. RH shown

W: 300mm • D 305mm • H 800mm**

Description	Code	€ Ex VAT	€ Inc VAT
Bonito 30cm RH base drawer unit*	1.030	262.00	**322.26**
Bonito 30cm LH base drawer unit*	1.031	262.00	**322.26**

*Plinth must be ordered separately
**Height measurement excluding countertop

Base Unit - 1.298



W: 600mm • D 305mm • H 800mm**

Description	Code	€ Ex VAT	€ Inc VAT
Bonito 60cm base cupboard with drawer*	1.298	439.00	**539.97**

*Plinth must be ordered separately
**Height measurement excluding countertop

1.062

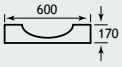

1.042

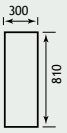

Cast Panel & Plain Infill

Description	Code	€ Ex VAT	€ Inc VAT
Bonito cast cut out panel	1.062	51.00	**62.73**
Plain infill panel 30 x 81cm	1.042	124.00	**152.52**

Extras

Description	Code	€ Ex VAT	€ Inc VAT
Vantage Plain Hidden Cistern CP Push Button	17.001	252.00	**309.96**
Eastbrook Jacket Hidden Cistern - Bottom Inlet	53.001	157.00	**193.11**
Vantage Hidden Cistern with Jacket	17.3029	290.00	**356.70**

Plinths

Description	Code	€ Ex VAT	€ Inc VAT
30cm Plinth (height 70mm)	1.011	28.00	**34.44**
60cm plinth (height 70mm)	1.037	31.00	**38.13**
90cm plinth (height 70mm)	1.038	34.00	**41.82**
120cm plinth (height 70mm)	1.039	35.00	**43.05**
150cm plinth (height 70mm)	1.040	41.00	**50.43**
180cm plinth (height 70mm)	1.041	44.00	**54.12**

Bonito Corner Unit Range

BONITO CORNER UNITS

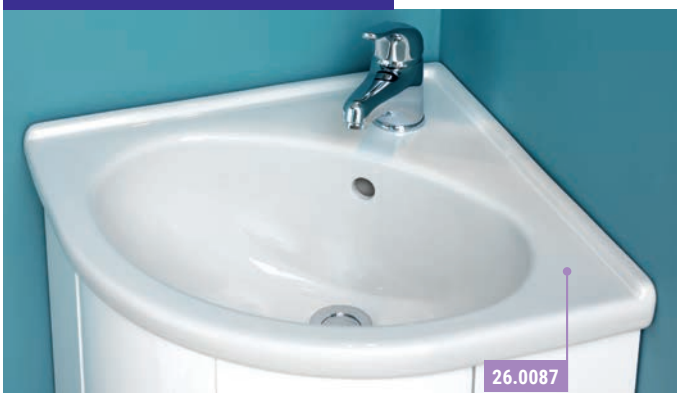







Bonito Corner Unit

Description	Code	€ Ex VAT	€ Inc VAT
Bonito Corner unit base only	1.087	518.00	**637.14**
Bonito corner ceramic top 1TH White	26.0087	222.00	**273.06**
Biava Hi.Flow Basin Mono	93.0052	146.00	**179.58**
Option 1			
Corner mirror cupboard carcass	1.000	350.00	**430.50**
Corner cupboard light cornice	1.002	145.00	**178.35**
Option 2			
Bonito Corner mirror with light	1.088	282.00	**346.86**

*Can be handed left or right.

All you will ever need for the perfect corner solution. Each style is finished in White Gloss with a solid ceramic top. Both the corner cupboard and corner mirror have a light cornice with a single LED lamp, operated by a pull-cord.

Bonito corner mirror 1.088

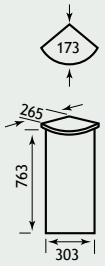

Corner unit 1.087

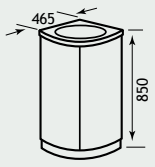

Ceramic top 26.0087



Castilla

CASTILLA 50, 60 AND 80 DRAWER UNIT


1.282 Unit & 51.032 Basin


1.282 Unit & 51.033 Basin


1.282 Unit & 51.029 Basin


1.282 Unit & 51.030 Basin


1.282 Unit & 51.031 Basin

Castilla 50, 60 And 80 Drawer Unit			
Description	**Code**	**€ Ex VAT**	**€ Inc VAT**
Castilla 50 drawer unit	1.286	471.00	**579.33**
Castilla 60 Drawer Unit	1.282	516.00	**634.68**
Castilla 80 Drawer Unit	1.283	616.00	**757.68**
Sit On Basins			
Description	**Code**	**€ Ex VAT**	**€ Inc VAT**
Renata sit on basin 430	51.029	255.00	**313.65**
Natura sit on basin 500x400	51.030	283.00	**348.09**
Pricilla sit on basin 510x300	51.031	283.00	**348.09**
Rondo sit on basin 412	51.032	283.00	**348.09**
Barbro sit on basin 460	51.033	426.00	**523.98**

FEATURES
- Soft close system on drawer

FEATURES - Sit On Basins
- Made of 75% natural marble stone
- Repairable if chipped
- Seamless surface, easy to maintain

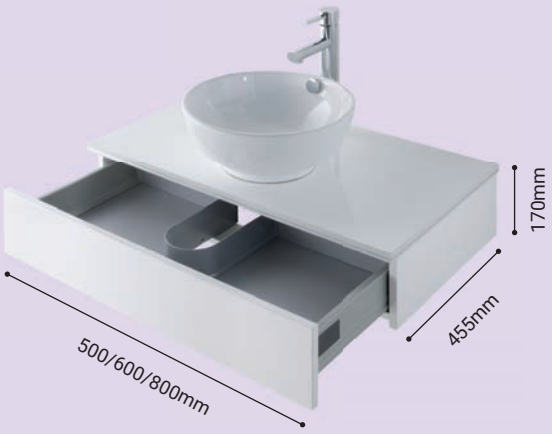

Rondo

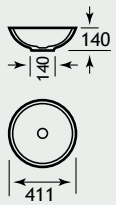

Barbro

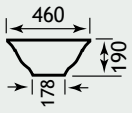

Natura

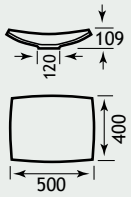

Pricilla

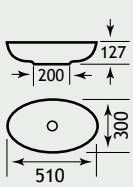

Renata

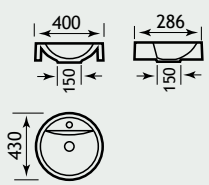

Cavone Cloakroom Unit Range

CAVONE CLOAKROOM DOOR UNITS



Our newly designed Cavone Cloakroom bathroom furniture features a luxurious curved basin that flows perfectly with the curved lines of the doors of the vanity unit.

FEATURES
- Soft close system on door
- Curved door design
- Interchangeable chrome or black handles
- Built in internal overflow as standard

FEATURES - BASIN TOPS
- Polymarble basin predrilled with 1 tap hole
- A modern seamless one-piece basin
- Curved basin design

Cavone Cloakroom Unit Range

CAVONE CLOAKROOM DOOR UNITS

40 CM UNIT



Cavone 40cm Cloackroom Door Unit

Description	Colour	Code	€ Ex VAT	€ Inc VAT
40cm Cloakroom Door Unit	White Gloss	36.0076	381.00	**468.63**
40cm Cloakroom Door Unit	Matt Grey	36.0074	381.00	**468.63**

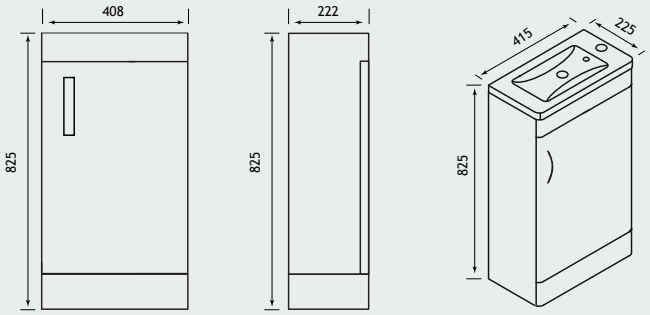

50 CM UNIT



Cavone 50cm Cloackroom Door Unit

Description	Colour	Code	€ Ex VAT	€ Inc VAT
50cm Cloakroom Door Unit	White Gloss	36.0081	427.00	**525.21**
50cm Cloakroom Door Unit	Matt Grey	36.0079	427.00	**525.21**

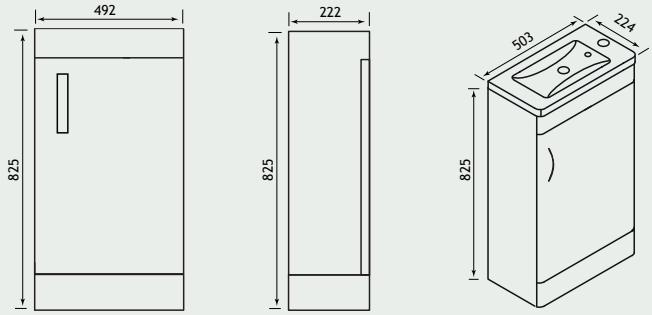

40 CM UNIT BASINS

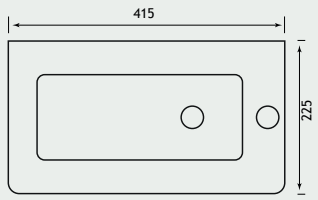

Cavone 40cm Cloakroom Basins

Description	Colour	Code	€ Ex VAT	€ Inc VAT
40cm Cloakroom Cavone Basin	White	36.0073	133.00	**163.59**

50 CM UNIT BASINS

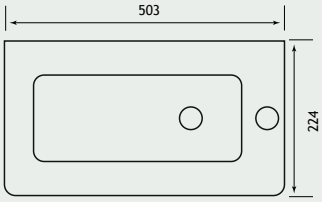

Cavone 50cm Cloakroom Basins

Description	Colour	Code	€ Ex VAT	€ Inc VAT
50cm Cloakroom Cavone Basin	White	36.0078	142.00	**174.66**

EXTRAS


36.0071


52.312

Cloakroom Cavone Extras

Description	Colour	Code	€ Ex VAT	€ Inc VAT
Cavone Handle (Each)	Smooth Black	36.0071	10.00	**12.31**
Vercelli Glass Shelf (600x119)	Chrome	52.312	143.00	**175.89**


93.0019


93.0010

Cloakroom Cavone Extras

Description	Colour	Code	€ Ex VAT	€ Inc VAT
Helston Basin Mono (inc waste)	Smooth Black	93.0019	177.00	**217.71**
Helston Basin Mono (inc waste)	Chrome	93.0010	161.00	**198.03**

EXTRAS

Cavone Cloakroom Unit Range

CAVONE CLOAKROOM WALL HUNG DOOR UNITS



Our newly designed Cavone Cloakroom bathroom furniture features a luxurious curved basin that flows perfectly with the curved lines of the doors of the vanity unit.

FEATURES
- Soft close system on door
- Curved door design
- Interchangeable chrome or black handles
- Built in internal overflow as standard

FEATURES - BASIN TOPS
- Polymarble basin predrilled with 1 tap hole
- A modern seamless one-piece basin
- Curved basin design

Cavone Cloakroom Unit Range

CAVONE CLOAKROOM WALL HUNG DOOR UNITS

40 CM UNIT



50 CM UNIT



Cavone 40cm Cloackroom Wall Hung Door Unit

Description	Colour	Code	€ Ex VAT	€ Inc VAT
40cm Cloakroom Wall Hung Unit	White Gloss	36.0077	276.00	**339.48**
40cm Cloakroom Wall Hung Unit	Matt Grey	36.0075	276.00	**339.48**

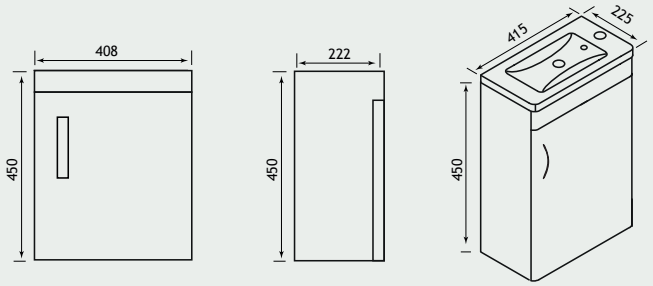

Cavone 50cm Cloackroom Wall Hung Door Unit

Description	Colour	Code	€ Ex VAT	€ Inc VAT
50cm Cloakroom Wall Hung Unit	White Gloss	36.0082	317.00	**389.91**
50cm Cloakroom Wall Hung Unit	Matt Grey	36.0080	318.00	**391.14**

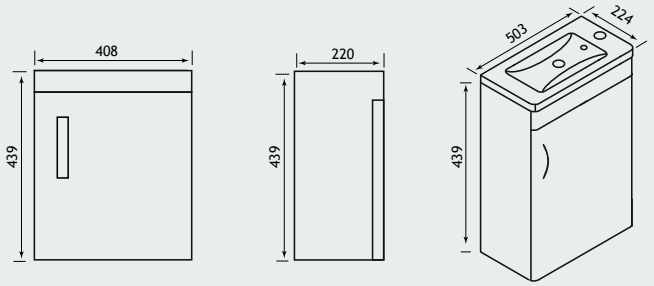

40 CM UNIT BASINS

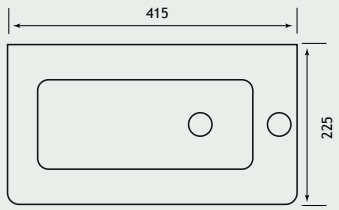

Cavone 40cm Cloakroom Basins

Description	Colour	Code	€ Ex VAT	€ Inc VAT
40cm Cloakroom Cavone Basin	White	36.0073	133.00	**163.59**

50 CM UNIT BASINS

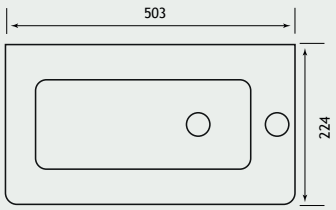

Cavone 50cm Cloakroom Basins

Description	Colour	Code	€ Ex VAT	€ Inc VAT
50cm Cloakroom Cavone Basin	White	36.0078	142.00	**174.66**

EXTRAS


36.0071


52.302

Cloakroom Cavone Extras

Description	Colour	Code	€ Ex VAT	€ Inc VAT
Cavone Handle (Each)	Smooth Black	36.0071	10.00	**12.31**
Vercelli Toilet Roll Holder Shelf	Chrome/Leather	52.302	146.00	**179.58**


93.0019


93.0010

Cloakroom Cavone Extras

Description	Colour	Code	€ Ex VAT	€ Inc VAT
Helston Basin Mono (inc waste)	Smooth Black	93.0019	177.00	**217.71**
Helston Basin Mono (inc waste)	Chrome	93.0010	161.00	**198.03**

EXTRAS

Cavone Cabinet Range

CAVONE DOOR BASE CABINET



Our newly designed Cavone bathroom furniture features a luxurious curved basin that flows perfectly with the curved lines of the doors of the vanity unit.

FEATURES
- Soft close system on doors
- Curved door design
- Interchangeable chrome or black handles
- Built in internal overflow as standard

FEATURES - BASIN TOPS
- Polymarble basin predrilled with 1 tap hole
- A modern seamless one-piece basin
- Curved basin design

Cavone Cabinet Range

CAVONE DOOR BASE CABINET

50 CM UNIT



Cavone 50cm Door Cabinet

Description	Colour	Code	€ Ex VAT	€ Inc VAT
50cm Door Cabinet	White Gloss	36.0042	591.00	**726.93**
50cm Door Cabinet	Matt Grey	36.0043	591.00	**726.93**

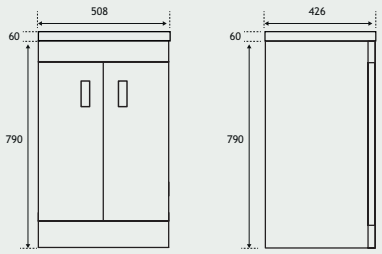

60 CM UNIT



Cavone 60cm Door Cabinet

Description	Colour	Code	€ Ex VAT	€ Inc VAT
60cm Door Cabinet	White Gloss	36.0047	670.00	**824.10**
60cm Door Cabinet	Matt Grey	36.0048	670.00	**824.10**

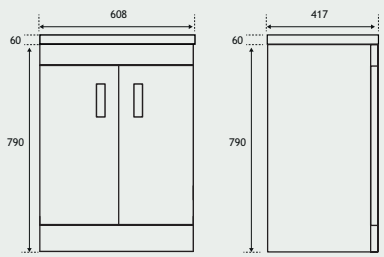

80 CM UNIT



Cavone 80cm Door Cabinet

Description	Colour	Code	€ Ex VAT	€ Inc VAT
80cm Door Cabinet	White Gloss	36.0052	800.00	**984.00**
80cm Door Cabinet	Matt Grey	36.0053	800.00	**984.00**

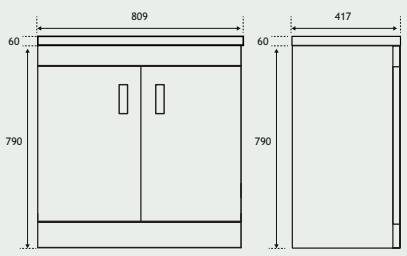

50 CM UNIT BASIN

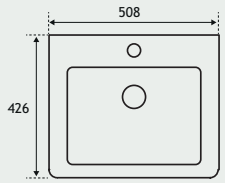

Cavone 50cm Basin

Description	Colour	Code	€ Ex VAT	€ Inc VAT
50cm Cavone Basin	White	36.0031	206.00	**253.38**

60 CM UNIT BASIN

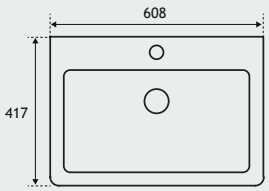

Cavone 60cm Basin

Description	Colour	Code	€ Ex VAT	€ Inc VAT
60cm Cavone Basin	White	36.0036	224.00	**275.52**

80 CM UNIT BASIN

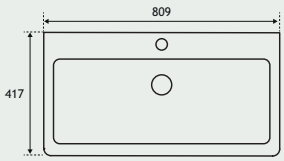

Cavone 80cm Basin

Description	Colour	Code	€ Ex VAT	€ Inc VAT
80cm Cavone Basin	White	36.0041	269.00	**330.87**

EXTRAS





Cloakroom Cavone Extras

Description	Colour	Code	€ Ex VAT	€ Inc VAT
Cavone Handle (Each)	Smooth Black	36.0071	10.00	**12.31**
Vercelli Toilet Roll Holder Shelf	Chrome/Leather	52.302	146.00	**179.58**





Cloakroom Cavone Extras

Description	Colour	Code	€ Ex VAT	€ Inc VAT
Helston Basin Mono (inc waste)	Smooth Black	93.0019	177.00	**217.71**
Helston Basin Mono (inc waste)	Chrome	93.0010	161.00	**198.03**

EXTRAS

Cavone Unit Range

CAVONE DRAWER BASE CABINET



Our newly designed Cavone bathroom furniture features a luxurious curved basin that flows perfectly with the curved lines of the drawers of the vanity unit.

FEATURES
- Soft close system on drawers
- Curved door design
- Interchangeable chrome or black handles
- Built in internal overflow as standard

FEATURES - BASIN TOPS
- Polymarble basin predrilled with 1 tap hole
- A modern seamless one-piece basin
- Curved basin design

Cavone Unit Range

CAVONE DRAWER BASE CABINET

50 CM UNIT



Cavone 50cm Drawer Cabinet

Description	Colour	Code	€ Ex VAT	€ Inc VAT
50cm Drawer Cabinet	White Gloss	36.0044	707.00	**869.61**
50cm Drawer Cabinet	Matt Grey	36.0045	707.00	**869.61**

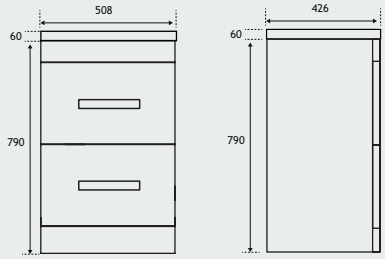

60 CM UNIT



Cavone 60cm Drawer Cabinet

Description	Colour	Code	€ Ex VAT	€ Inc VAT
60cm Drawer Cabinet	White Gloss	36.0049	585.00	**702.00**
60cm Drawer Cabinet	Matt Grey	36.0050	780.00	**959.40**

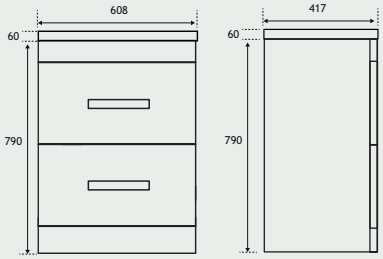

80 CM UNIT



Cavone 80cm Drawer Cabinet

Description	Colour	Code	€ Ex VAT	€ Inc VAT
80cm Drawer Cabinet	White Gloss	36.0054	917.00	**1127.91**
80cm Drawer Cabinet	Matt Grey	36.0055	917.00	**1127.91**

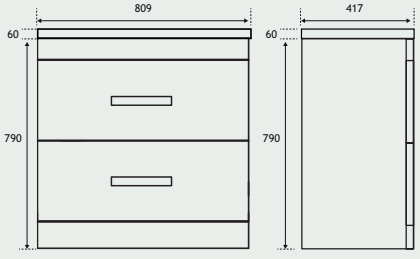

50 CM UNIT BASIN

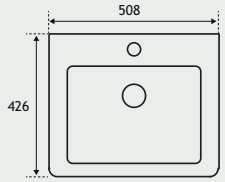

Cavone 50cm Basin

Description	Colour	Code	€ Ex VAT	€ Inc VAT
50cm Cavone Basin	White	36.0031	206.00	**253.38**

60 CM UNIT BASIN

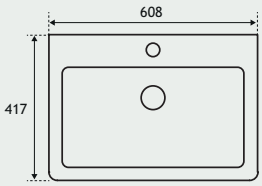

Cavone 60cm Basin

Description	Colour	Code	€ Ex VAT	€ Inc VAT
60cm Cavone Basin	White	36.0036	224.00	**275.52**

80 CM UNIT BASIN

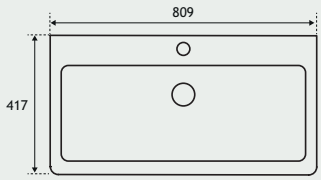

Cavone 80cm Basin

Description	Colour	Code	€ Ex VAT	€ Inc VAT
80cm Cavone Basin	White	36.0041	269.00	**330.87**

EXTRAS





Cloakroom Cavone Extras

Description	Colour	Code	€ Ex VAT	€ Inc VAT
Cavone Handle (Each)	Smooth Black	36.0071	10.00	**12.31**
Vercelli Soap Dish Holder	Chrome	52.307	52.00	**63.96**





Cloakroom Cavone Extras

Description	Colour	Code	€ Ex VAT	€ Inc VAT
Helston Basin Mono (inc waste)	Smooth Black	93.0019	177.00	**217.71**
Helston Basin Mono (inc waste)	Chrome	93.0010	161.00	**198.03**

EXTRAS

Cavone Unit Range

CAVONE WALL HUNG DOOR CABINET



Our newly designed Cavone bathroom furniture features a luxurious curved basin that flows perfectly with the curved lines of the drawers of the vanity unit.

FEATURES
- Soft close system on doors
- Curved door design
- Interchangeable chrome or black handles
- Built in internal overflow as standard

FEATURES - BASIN TOPS
- Polymarble basin pre-drilled with 1 tap hole
- A modern seamless one-piece basin
- Curved basin design

CavoneUnit Range

CAVONE WALL HUNG DOOR CABINET

50 CM UNIT



Cavone 50cm Wall Hung Door Cabinet

Description	Colour	Code	€ Ex VAT	€ Inc VAT
50cm Wall Hung Door Cabinet	White Gloss	36.0027	398.00	**489.54**
50cm Wall Hung Door Cabinet	Matt Grey	36.0028	398.00	**489.54**

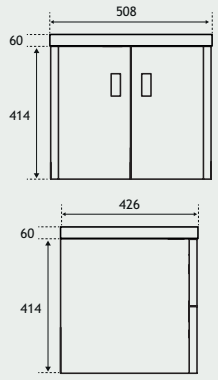

60 CM UNIT



Cavone 60cm Wall Hung Door Cabinet

Description	Colour	Code	€ Ex VAT	€ Inc VAT
60cm Wall Hung Door Cabinet	White Gloss	36.0032	447.00	**549.81**
60cm Wall Hung Door Cabinet	Matt Grey	36.0033	447.00	**549.81**

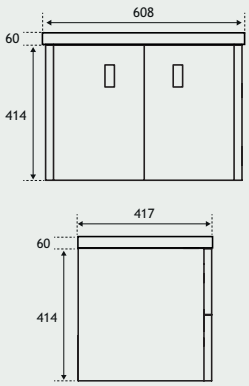

80 CM UNIT



Cavone 80cm Wall Hung Door Cabinet

Description	Colour	Code	€ Ex VAT	€ Inc VAT
80cm Wall Hung Door Cabinet	White Gloss	36.0037	524.00	**644.52**
80cm Wall Hung Door Cabinet	Matt Grey	36.0038	524.00	**644.52**

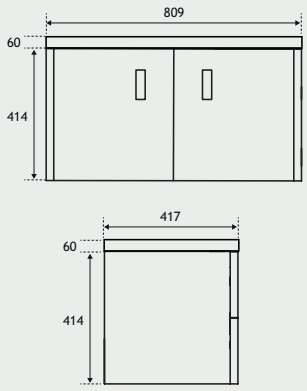

50 CM UNIT BASIN

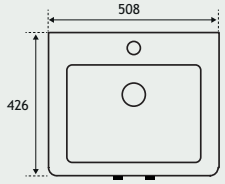

Cavone 50cm Basin

Description	Colour	Code	€ Ex VAT	€ Inc VAT
50cm Cavone Basin	White	36.0031	206.00	**253.38**

60 CM UNIT BASIN

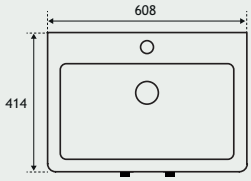

Cavone 60cm Basin

Description	Colour	Code	€ Ex VAT	€ Inc VAT
60cm Cavone Basin	White	36.0036	224.00	**275.52**

80 CM UNIT BASIN

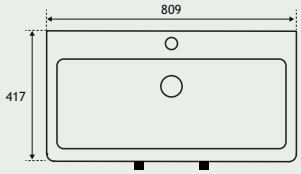

Cavone 80cm Basin

Description	Colour	Code	€ Ex VAT	€ Inc VAT
80cm Cavone Basin	White	36.0041	269.00	**330.87**

EXTRAS





Cloakroom Cavone Extras

Description	Colour	Code	€ Ex VAT	€ Inc VAT
Cavone Handle (Each)	Smooth Black	36.0071	10.00	**12.31**
Metal Towel Ring	Chtome	52.114	55.00	**67.65**





Cloakroom Cavone Extras

Description	Colour	Code	€ Ex VAT	€ Inc VAT
Helston Basin Mono (inc waste)	Smooth Black	93.0019	177.00	**217.71**
Abberton Basin Mono with Waste	Chrome	79.1034	117.00	**143.91**

EXTRAS

Cavone Unit Range

CAVONE WALL HUNG DRAWER CABINET



Our newly designed Cavone bathroom furniture features a luxurious curved basin that flows perfectly with the curved lines of the drawers of the vanity unit.

FEATURES
- Soft close system on drawers
- Curved draw design
- Interchangeable chrome or black handles
- Built in internal overflow as standard

FEATURES - BASIN TOPS
- Polymarble basin pre-drilled with 1 tap hole
- A modern seamless one-piece basin
- Curved basin design

Cavone Unit Range

CAVONE WALL HUNG DRAWER CABINET

50 CM UNIT



Cavone 50cm Wall Hung Drawer Cabinet

Description	Colour	Code	€ Ex VAT	€ Inc VAT
50cm Wall Hung Drawer Cabinet	White Gloss	36.0029	514.00	**632.22**
50cm Wall Hung Drawer Cabinet	Matt Grey	36.0030	514.00	**632.22**

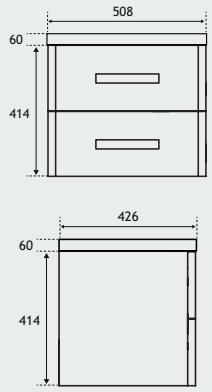

60 CM UNIT



Cavone 60cm Wall Hung Drawer Cabinet

Description	Colour	Code	€ Ex VAT	€ Inc VAT
60cm Wall Hung Drawer Cabinet	White Gloss	36.0034	553.00	**680.19**
60cm Wall Hung Drawer Cabinet	Matt Grey	36.0035	553.00	**680.19**

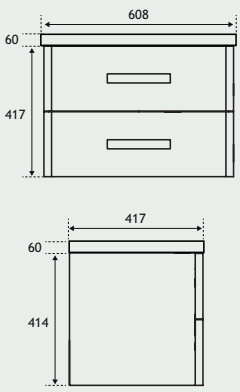

80 CM UNIT



Cavone 80cm Wall Hung Drawer Cabinet

Description	Colour	Code	€ Ex VAT	€ Inc VAT
80cm Wall Hung Drawer Cabinet	White Gloss	36.0039	626.00	**769.98**
80cm Wall Hung Drawer Cabinet	Matt Grey	36.0040	626.00	**769.98**

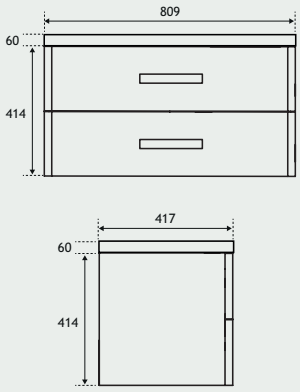

50 CM UNIT BASIN

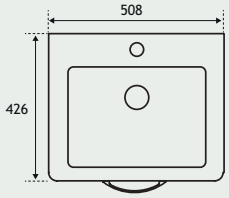

Cavone 50cm Basin

Description	Colour	Code	€ Ex VAT	€ Inc VAT
50cm Cavone Basin	White	36.0031	206.00	**253.38**

60 CM UNIT BASIN

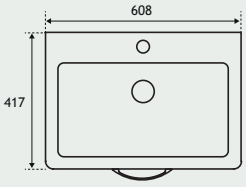

Cavone 60cm Basin

Description	Colour	Code	€ Ex VAT	€ Inc VAT
60cm Cavone Basin	White	36.0036	224.00	**275.52**

80 CM UNIT BASIN

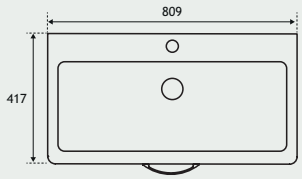

Cavone 80cm Basin

Description	Colour	Code	€ Ex VAT	€ Inc VAT
80cm Cavone Basin	White	36.0041	269.00	**330.87**

EXTRAS





Cloakroom Cavone Extras

Description	Colour	Code	€ Ex VAT	€ Inc VAT
Cavone Handle (Each)	Smooth Black	36.0071	10.00	**12.31**
Vercelli Soap Dish Holder	Chrome	52.307	52.00	**63.96**





Cloakroom Cavone Extras

Description	Colour	Code	€ Ex VAT	€ Inc VAT
Helston Basin Mono (inc waste)	Smooth Black	93.0019	177.00	**217.71**
Helston Basin Mono (inc waste)	Chrome	93.0010	161.00	**198.03**

EXTRAS

Cavone WC Unit

CAVONE WC UNITS



Our newly designed Cavone WC Unit features a the same luxurious curved corners, same colours and modern feel as its matching Cavone Vanity Units.

FEATURES

- Delivered to you fully assembled.
- High quality Matt Grey & White finishes - exact match to Vanity Units.
- Seamless surface easy to maintain.
- Hidden cistern sold separately.
- Supplied complete with plinth & top.
- Available in 50cm and 60cm widths

Cavone WC Unit

CAVONE WC UNITS

50 CM UNIT



Cavone 50cm WC Units

Description	Colour	Code	€ Ex VAT	€ Inc VAT
50cm Cavone WC Unit	White Gloss	36.0089	380.00	**467.40**
50cm Cavone WC Unit	Matt Grey	36.0090	380.00	**467.40**

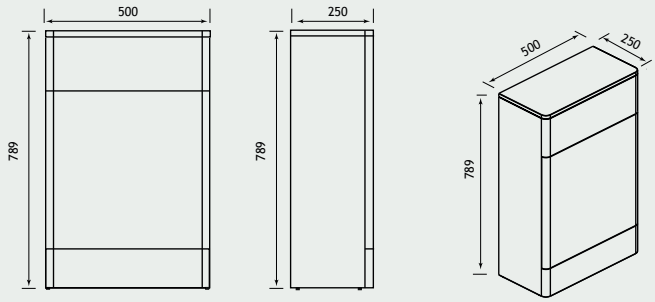

60 CM UNIT



Cavone 60cm WC Units

Description	Colour	Code	€ Ex VAT	€ Inc VAT
60cm Cavone WC Unit	White Gloss	36.0091	411.00	**505.53**
60cm Cavone WC Unit	Matt Grey	36.0092	411.00	**505.53**

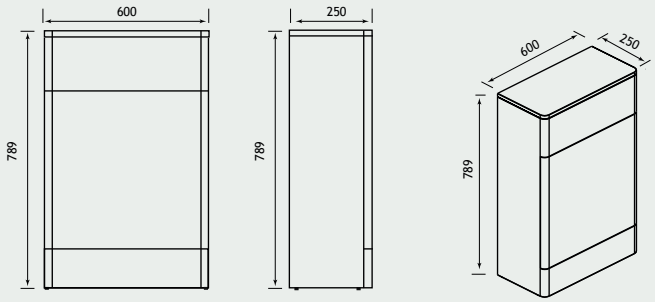

36.0089 Cavone WC Unit 50cm (Left) Toilet Pan for illustration purposes only



36.0079 Cavone Cloackroom Cabinet 60cm (Right)

COMPLETE THE LOOK



26.0042
26.0041

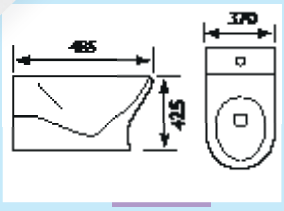

Northall BTW Pan

Description	Code	€ Ex VAT	€ Inc VAT
Northall BTW Rimless Pan	26.0041	383.00	**471.09**
Northall Soft Close Seat	26.0042	136.00	**167.28**
Northall/Farringdon Wrap Over Soft Close Seat	26.0056	104.00	**127.92**

Diamante 110 Furniture

DIAMANTE 110





Similar in design to the Bonito 120, the Diamante has a more contemporary look, a smaller depth at only 220mm and a stunning one-piece cast top available in either left or right hand versions. The Diamante 110 White Gloss combination is available with either right or left hand bowls, shown with Kompact BTW pan.

Diamante 110 Base and Top

Description	Code	€ Ex VAT	€ Inc VAT
Diamante 50cm WC unit	1.070	457.00	**562.11**
Diamante 60cm basin unit	1.071	408.00	**501.84**
Diamante 1090mm plinth	1.077	35.00	**43.05**
Diamante 110 cast top LH *	51.003	467.00	**574.41**
Diamante 110 cast top RH *	51.004	467.00	**574.41**
Diamante 50cm wall unit	1.254	362.00	**445.26**
Bonito 60cm mirror †	1.036	210.00	**258.30**
Diamante 60cm Cornice	1.204	317.00	**389.91**
Prado 700 mono basin c/w click waste	56.2010	184.00	**226.32**

*Due to depth of the waste area, the trap for external overflow kit & a flip top basin waste (unslotted) are recommended for installation.

FEATURES - CAST MARBLE TOPS
- Made of 75% natural marble stone
- Repairable if chipped
- Seamless surface, easy to maintain

FEATURES
- Separate shaver socket

For wall mirrors and cabinets see pages 326-351.

Extras

Description	Code	€ Ex VAT	€ Inc VAT
Trap for external overflow kit	7.0015	34.00	**41.82**
Flip Top Basin Waste - Unslotted	25.0005	27.00	**33.21**



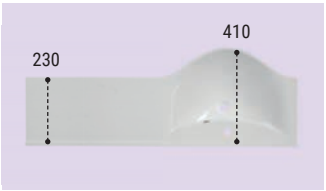

All 1096mm in length, 145mm depth to top of rim

Basin Unit

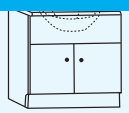

The upper panel is supplied cut for the Diamante 1150mm top

1.071

Width	Depth	Height
600mm	225mm	810mm

*Excluding countertop and basin

Concealed Cistern WC unit

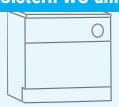

With two removable fascia panels. The panels are not pre-drilled or cut (for greater flexibility when fitting)

1.070

Width	Depth	Height
495mm	225mm	810mm

*Height excluding countertop and basin

Mirror & Cornice

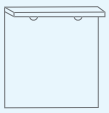

with LED lamps and pull-cord operation

1.036 / 1.204

Width		Height
600mm		706mm

*Cornice sold separately

Wall Cupboard

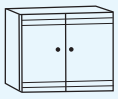

with two doors

1.254

Width	Depth	Height
500mm	176mm	700mm

Extras

Description	Code	€ Ex VAT	€ Inc VAT
Uncut top panel for new Diamante 60cm basin unit	1.079	124.00	**152.52**
Diamante WC top panel	1.072	133.00	**163.59**
Diamante WC bottom panel	1.073	133.00	**163.59**
Top panel for new Diamante 60cm basin unit	1.074	124.00	**152.52**
Eastbrook Jacket Hidden Cistern - Bottom Inlet	53.001	157.00	**193.11**

For more hidden cisterns see pages 194-195.

Diamante WC & Corner Units

DIAMANTE WC UNIT



A compact, stand-alone 500mm WC unit available with a White Gloss MDF top.

Diamante WC Unit

Description	Code	€ Ex VAT	€ Inc VAT
Oslo WC unit lid	1.075	89.00	**109.47**
New Diamante 50cm WC unit	1.070	457.00	**562.11**
Diamante 490mm plinth	1.078	30.00	**36.90**
Vantage Plain Hidden Cistern CP Push Button	17.001	252.00	**309.96**
Eastbrook Jacket Hidden Cistern - Bottom Inlet	53.001	157.00	**193.11**
Vantage Hidden Cistern with Jacket	17.3029	290.00	**356.70**
Kompact BTW pan	27.0321	238.00	**292.74**
Kompact soft close seat	21.1151	212.00	**260.76**

Note: other BTW pans are available, see Sanitary section pages 198-199. Plinth sold separately

DIAMANTE CORNER UNIT

Option 3



1.088 Bonito corner mirror only (one spot)



26.0086

Option 2

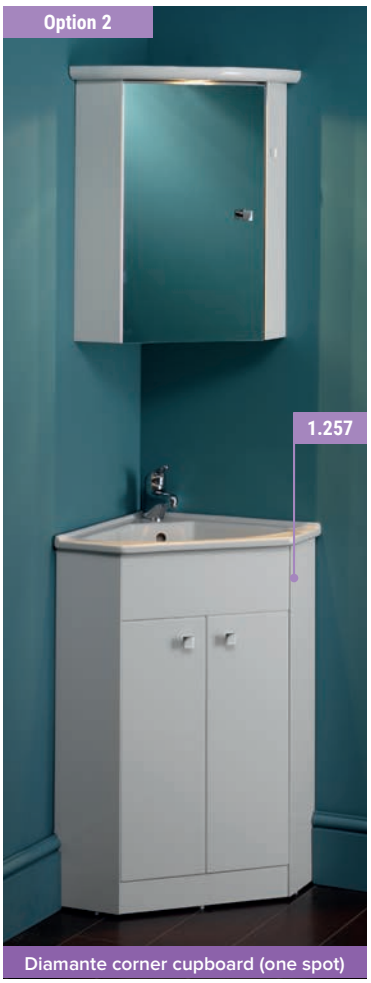

Diamante corner cupboard (one spot)

Diamante Corner Unit

Description	Code	€ Ex VAT	€ Inc VAT
Diamante corner unit	1.257	478.00	**587.94**
Diamante corner ceramic basin 1TH	26.0086	226.00	**277.98**
Mirror Option 1 (not shown)			
Corner mirror cupboard carcass	1.000	350.00	**430.50**
Mirror Option 2			
Corner mirror cupboard carcass *	1.000	350.00	**430.50**
Corner cupboard LED light cornice	1.002	145.00	**178.35**
Mirror Option 3			
Bonito Corner mirror with LED light	1.088	282.00	**346.86**

*Can be handed left or right.

For wall mirrors and cabinets see pages 326-351.

Corner cupboard light cornice 1.002

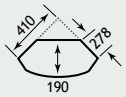

Corner mirror cupboard 1.000

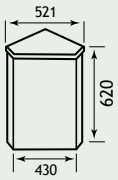

Corner unit base with ceramic top 1.257 & 26.0086

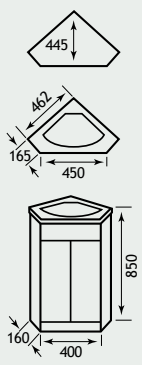

Faro 39 Range

FARO 39



A modern design of a traditional concept with soft close hinges on doors only, adjustable feet and stone resin cast top.

Faro 39 Base And Top

Description	Code	€ Ex VAT	€ Inc VAT
Faro 39cm base unit	1.269	380.00	**467.40**
Oslo/Faro 39 cast top *	51.005	231.00	**284.13**
Faro 39cm mirror †	1.270	194.00	**238.62**
Faro 39cm LED cornice	1.277	276.00	**339.48**

† NB. mirror must be fitted with cornice. *Due to depth of the waste area, the trap for external overflow kit & a flip top basin waste (unslotted) are recommended for installation.

FEATURES
- Soft close system on doors
- Separate shaver socket
- Adjustable legs 120-130mm

FEATURES - Cast Marble Tops
- Made of 75% natural marble stone
- Repairable if chipped
- Seamless surface, easy to maintain

For wall mirrors and cabinets see pages 326-351

Extras

Description	Code	€ Ex VAT	€ Inc VAT
Trap for external overflow kit	7.0015	34.00	**41.82**
Flip Top Basin Waste - Unslotted	25.0005	27.00	**33.21**



The Faro range features adjustable legs. 120-130mm

51.011

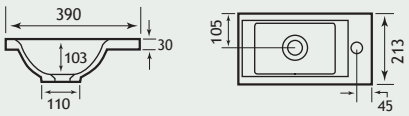

For wall mirrors and cabinets see pages 326-351

1.270/1.277

*NB Mirror and cornice height does not include plastic shroud

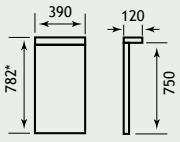

1.269

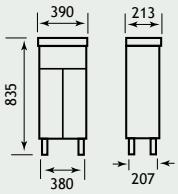

Faro 58 Range

FARO 58



A modern design of a traditional concept with soft close hinges on doors only, adjustable feet and stone resin cast top.

Faro 58 Base And Top

Description	Code	€ Ex VAT	€ Inc VAT
Sorrento/Faro 56cm base unit	1.512	621.00	**763.83**
Faro 58cm cast top *	51.011	339.00	**416.97**
Faro 58cm wave action LED cornice	1.272	405.00	**498.15**
Faro 58cm mirror †	1.271	234.00	**287.82**

† NB. mirror must be fitted with cornice. *Due to depth of the waste area, the trap for external overflow kit & a flip top basin waste (unslotted) are recommended for installation.

FEATURES
- Soft close system on doors and drawers
- Separate shaver socket
- Adjustable legs 120-130mm

FEATURES - Cast Marble Tops
- Made of 75% natural marble stone
- Repairable if chipped
- Seamless surface, easy to maintain

Extras

Description	Code	€ Ex VAT	€ Inc VAT
Trap for external overflow kit	7.0015	34.00	**41.82**
Flip Top Basin Waste - Unslotted	25.0005	27.00	**33.21**

51.011

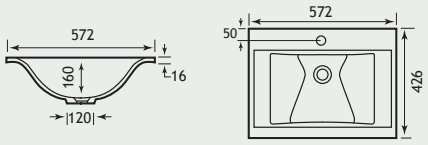

For wall mirrors and cabinets see pages 326-351

1.272 / 1.271

*NB Mirror and cornice height does not include plastic shroud

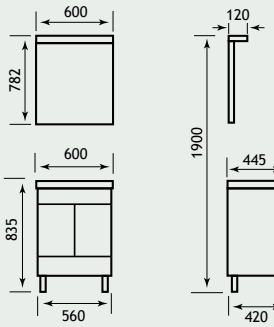

1.512



Faro 80 Range

FARO 80

Option 1



A modern design of a traditional concept with soft close hinges on doors only, adjustable feet and cast tops.

Faro 80 - Base and Top			
Description	**Code**	**€ Ex VAT**	**€ Inc VAT**
Sorrento/Faro 76cm base unit	1.514	700.00	**861.00**
Faro 80cm cast top *	51.012	385.00	**473.55**
Mirror Options 1			
Faro 80cm mirror †	1.273	269.00	**330.87**
Faro 80cm wave action LED cornice	1.274	468.00	**575.64**
Mirror Options 2			
Faro 39cm mirror †	1.270	194.00	**238.62**
Faro 39cm LED cornice	1.277	276.00	**339.48**
Faro 20cm Wall Cupboard (each)**	1.268	254.00	**312.42**

† NB. mirror must be fitted with cornice. *Due to depth of the waste area, the trap for external overflow kit & a flip top basin waste (unslotted) are recommended for installation. **NB For Option 2 this line needs to be doubled if two cupboards required.

Extras			
Description	**Code**	**€ Ex VAT**	**€ Inc VAT**
Trap for external overflow kit	7.0015	34.00	**41.82**
Flip Top Basin Waste - Unslotted	25.0005	27.00	**33.21**

Option 2



FEATURES
- Soft close system on doors
- Separate shaver socket
- Adjustable legs 120-130mm

FEATURES - CAST MARBLE TOPS
- Made of 75% natural marble stone
- Repairable if chipped
- Seamless surface, easy to maintain

The Faro range features adjustable legs. 120-130mm



51.012

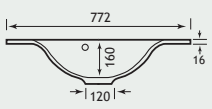

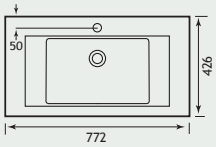

For wall mirrors and cabinets see pages 326-351

(Option 1) 1.273/1.274

*NB Mirror and cornice height does not include plastic shroud

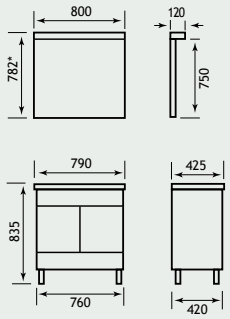

1.514

(Option 2) 1.270/1.277/1.268

*NB Mirror and cornice height does not include plastic shroud

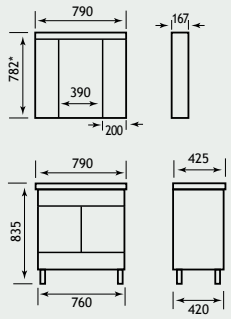

1.514

Faro 100 Range

FARO 100

Option 2



A modern design of a traditional concept with soft close hinges on doors only, adjustable feet and cast tops.

Faro 100 Base and Top

Description	Code	€ Ex VAT	€ Inc VAT
Sorrento/Faro 96cm base unit	1.516	836.00	**1028.28**
Faro 100cm cast top *	51.013	436.00	**536.28**
Mirror Options 1			
Faro 100cm mirror †	1.275	308.00	**378.84**
Faro 100cm wave action LED cornice	1.276	516.00	**634.68**
Mirror Options 2			
Faro 58cm mirror †	1.271	234.00	**287.82**
Faro 58cm wave action LED cornice	1.272	405.00	**498.15**
Faro 20cm Wall Cupboard (each)**	1.268	254.00	**312.42**

† NB. mirror must be fitted with cornice. *Due to depth of the waste area, the trap for external overflow kit & a flip top basin waste (unslotted) are recommended for installation. **NB For Option 2 this line needs to be doubled if two cupboards required.

Extras

Description	Code	€ Ex VAT	€ Inc VAT
Trap for external overflow kit	7.0015	34.00	**41.82**
Flip Top Basin Waste - Unslotted	25.0005	27.00	**33.21**

Option 1



FEATURES
- Soft close system on doors
- Separate shaver socket
- Chrome spotlights
- Adjustable legs 120-130mm

FEATURES - Cast Marble Tops
- Made of 75% natural marble stone
- Repairable if chipped
- Seamless surface, easy to maintain

51.013

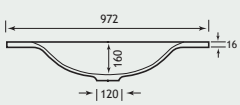

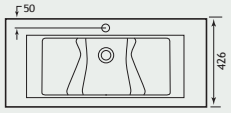

For wall mirrors and cabinets see pages 326-351

(Option 1) 1.275/1.276

*NB Mirror and cornice height does not include plastic shroud

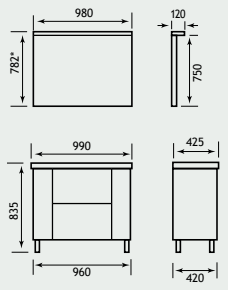

1.516

(Option 2) 1.271/1.272/1.268

*NB Mirror and cornice height does not include plastic shroud

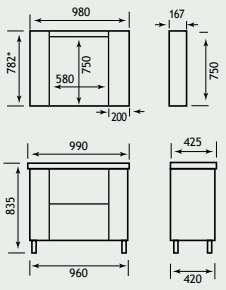

1.516

Gravina Range

GRAVINA SINGLE DRAWER WALL HUNG UNIT

Our newly designed Cavone bathroom furniture features a luxurious ultra-modern basin that flows perfectly with the straight lines of the pull out draw of the vanity unit.

FEATURES
- Soft close system on drawer
- Ultra-modern wall-hung design
- Available in White Gloss & High Gloss Grey

FEATURES - BASIN TOPS
- Polymarble basin predrilled with 1 tap hole
- A modern seamless one-piece basin
- Straight-lines basin design



36.0058 (50cm)

Gravina Range

GRAVINA SINGLE DRAWER WALL HUNG UNIT

50 CM UNIT



Gravina 50cm Single Drawer Wall Hung Unit

Description	Colour	Code	€ Ex VAT	€ Inc VAT
50cm Single Drawer Wall Hung Unit	White Gloss	36.0057	409.00	**503.07**
50cm Single Drawer Wall Hung Unit	High Gloss Grey	36.0058	409.00	**503.07**

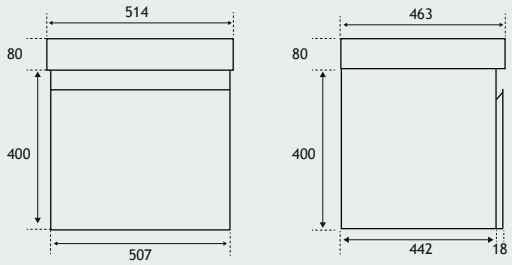

60 CM UNIT



Gravina 60cm Single Drawer Wall Hung Unit

Description	Colour	Code	€ Ex VAT	€ Inc VAT
60cm Single Drawer Wall Hung Unit	White Gloss	36.0060	450.00	**553.50**
60cm Single Drawer Wall Hung Unit	High Gloss Grey	36.0061	450.00	**553.50**

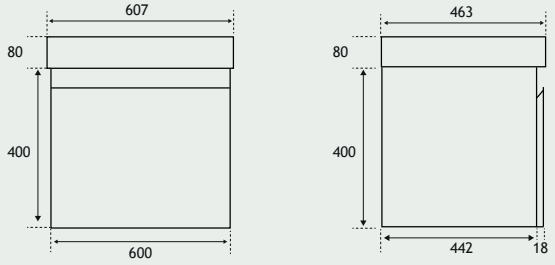

50 CM UNIT BASIN

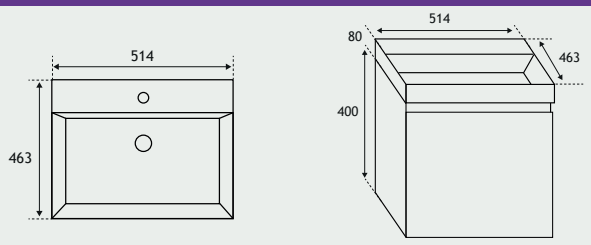

Cavone 50cm Cloakroom Basin

Description	Colour	Code	€ Ex VAT	€ Inc VAT
50cm Gravina Wall Hung Basin	White	36.0059	223.00	**274.29**

60 CM UNIT BASIN

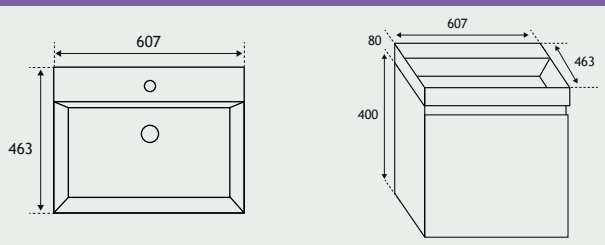

Cavone 60cm Cloakroom Basin

Description	Colour	Code	€ Ex VAT	€ Inc VAT
60cm Gravina Wall Hung Basin	White	36.0062	251.00	**308.73**



Basin View 36.0057 (50cm)

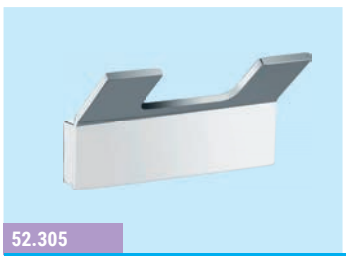

52.305



93.0010

EXTRAS

Cloakroom Cavone Extras

Description	Colour	Code	€ Ex VAT	€ Inc VAT
Vercelli Double Robe hook	Chrome	52.305	28.00	**34.44**
Helston Basin Mono (inc waste)	Chrome	93.0010	161.00	**198.03**

Hardwick Range

HARDWICK TRADITIONAL UNIT

Our newly designed Hardwick bathroom furniture features a luxurious basin design that flows perfectly with the traditional inspired curved lines and door panels of the vanity unit.

FEATURES
- Soft close system on doors
- Traditional design inspired door design
- High quality painted doors
- Internal glass shelf (39cm unit has wooden shelf)

FEATURES - BASIN TOPS
- Polymarble basin predrilled with 1 tap hole
- A modern seamless one-piece basin
- Curved & straight basin designs
- Built in internal overflow as standard



36.4012 (120cm) Unit, with Double Bowl Basin 36.4015

See page 258 for compatible basins >>>

Hardwick Range

HARDWICK TRADITIONAL UNIT

50 CM UNIT



Hardwick 50cm Traditional Unit

Description	Colour	Code	€ Ex VAT	€ Inc VAT
Hardwick 50cm Unit	Matt White	36.0003	800.00	**984.00**
Hardwick 50cm Unit	Matt Anthracite	36.0004	800.00	**984.00**
Hardwick 50cm Unit	Matt Cobalt Blue	36.0063	800.00	**984.00**

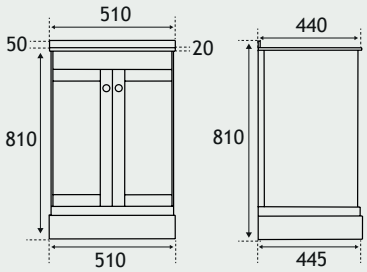

Total width with both doors open: 975mm

60 CM UNIT



Hardwick 60cm Traditional Unit

Description	Colour	Code	€ Ex VAT	€ Inc VAT
Hardwick 60cm Unit	Matt White	36.0006	866.00	**1065.18**
Hardwick 60cm Unit	Matt Anthracite	36.0007	866.00	**1065.18**
Hardwick 60cm Unit	Matt Cobalt Blue	36.0064	866.00	**1065.18**

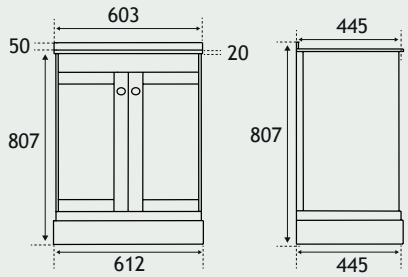

Total width with both doors open: 1059mm

120 CM UNIT



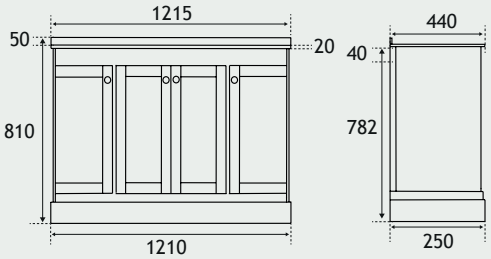

Total width with both doors open: 1755mm

Hardwick Traditional 120cm Unit

Description	Colour	Code	€ Ex VAT	€ Inc VAT
Hardwick 120cm Unit	Matt White	36.0021	1501.00	**1846.23**
Hardwick 120cm Unit	Matt Anthracite	36.0022	1501.00	**1846.23**
Hardwick 120cm Unit	Matt Cobalt Blue	36.0069	1501.00	**1846.23**
Hardwick 120cm Double Bowl Vanity Unit	Matt White	36.4011	1476.00	**1815.48**
Hardwick 120cm Double Bowl Vanity Unit	Matt Anthracite	36.4012	1476.00	**1815.48**
Hardwick 120cm Double Bowl Vanity Unit	Matt Cobalt Blue	36.4013	1476.00	**1815.48**

See page 258 for compatible basins

Hardwick Range

HARDWICK BASINS QUARTZ





Quartz Basin - Exploded View | Basin comes as one piece

BASINS TECHNICAL

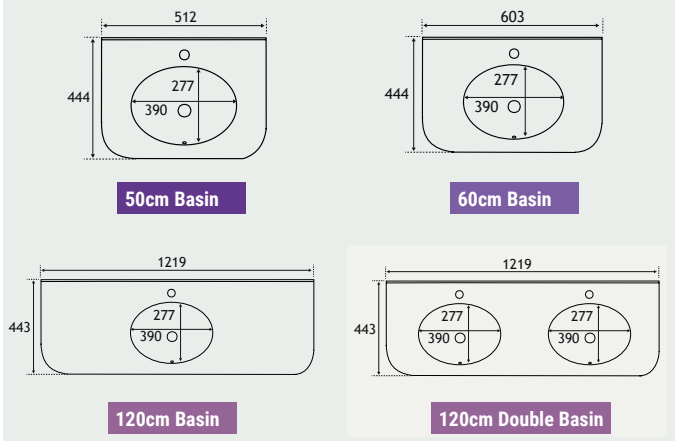

Hardwick Quartz Basins

Description	Colour	Code	€ Ex VAT	€ Inc VAT
Hardwick Traditional 50cm Basin Quartz	White Quartz	36.4001	293.00	**360.39**
Hardwick Traditional 60cm Basin Quartz	White Quartz	36.4002	308.00	**378.84**
Hardwick Traditional 120cm Basin Quartz	White Quartz	36.4007	524.00	**644.52**
Hardwick Traditional 120cm Double Bowl Basin Quartz	White Quartz	36.4015	488.00	**600.24**

HARDWICK BASINS TRADITIONAL



BASINS TECHNICAL

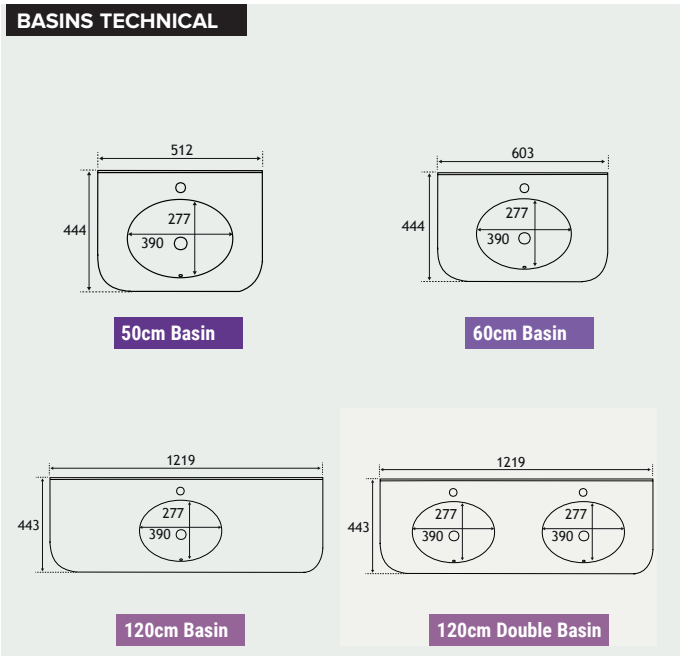

Hardwick Traditional Basins

Description	Colour	Code	€ Ex VAT	€ Inc VAT
Hardwick Traditional 50cm Basin	White (Plain)	36.0005	244.00	**300.12**
Hardwick Traditional 60cm Basin	White (Plain)	36.0008	268.00	**329.64**
Hardwick Traditional 120cm Basin	White (Plain)	36.0023	461.00	**567.03**
Hardwick Traditional 120cm Double Basin	White (Plain)	36.4014	464.00	**570.72**

Hardwick WC Units

HARDWICK WC UNITS

Our newly designed Hardwick WC Unit features a the same traditional styling, same colours and luxurious feel as its matching Hardwick Vanity Units.

FEATURES

- Delivered to you fully assembled.
- High quality Matt Anthracite, Cobalt Blue & White finishes.
- Seamless surface easy to maintain.
- Hidden cistern sold separately.
- Supplied complete with plinth & top.
- Available in 50cm and 60cm widths



36.0067 Hardwick Corner Unit (Left)

36.0088 Cavone WC Unit 60cm (Right)

Toilet Pan for illustration purposes only

50 CM UNIT



60 CM UNIT



Hardwick WC 50cm Unit

Description	Colour	Code	€ Ex VAT	€ Inc VAT
50cm Hardwick WC Unit	Matt White	36.0083	380.00	**467.40**
50cm Hardwick WC Unit	Matt Anthracite	36.0084	380.00	**467.40**
50cm Hardwick WC Unit	Matt Cobalt Blue	36.0085	380.00	**467.40**

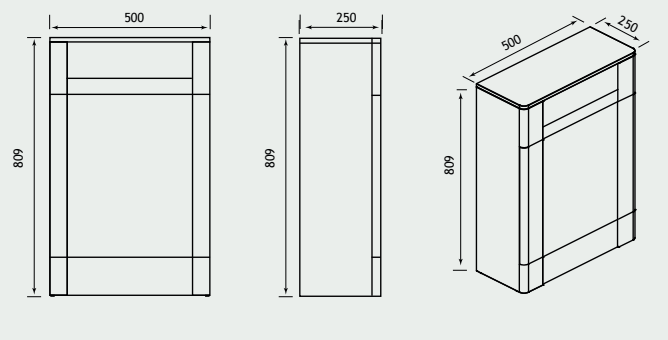

Hardwick WC 60cm Unit

Description	Colour	Code	€ Ex VAT	€ Inc VAT
60cm Hardwick WC Unit	Matt White	36.0086	411.00	**505.53**
60cm Hardwick WC Unit	Matt Anthracite	36.0087	411.00	**505.53**
60cm Hardwick WC Unit	Matt Cobalt Blue	36.0088	411.00	**505.53**

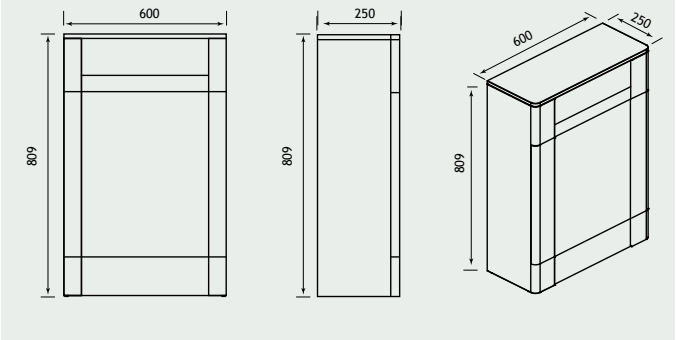

Hardwick Range

HARDWICK CORNER CABINET

Our newly designed Hardwick bathroom furniture features a luxurious basin design that flows perfectly with the tradtional inspired curved lines and door panels of the vanity unit.

FEATURES
- Soft close system on doors
- Traditional design inspired door design
- High quality painted doors
- Built in internal overflow as standard
- Internal glass shelf

FEATURES - BASIN TOPS
- Polymarble basin predrilled with 1 tap hole
- A modern seamless one-piece basin
- Curved basin design



36.0067 Left Hand

See page 262 for compatible basins >>

Hardwick Range

60 CM CABINET



HARDWICK CORNER CABINET

90 CM CABINET



Hardwick 60cm Corner Cabinet

Description	Colour	Code	€ Ex VAT	€ Inc VAT
Hardwick 60cm Corner Cabinet LH	Matt White	36.0009	866.00	**1065.18**
Hardwick 60cm Corner Cabinet RH	Matt White	36.0012	866.00	**1065.18**
Hardwick 60cm Corner Cabinet LH	Matt Cobalt Blue RAL 5013	36.0065	866.00	**1065.18**
Hardwick 60cm Corner Cabinet RH	Matt Cobalt Blue RAL 5013	36.0066	866.00	**1065.18**
Hardwick 60cm Corner Cabinet LH	Matt Anthracite RAL 7016	36.0010	866.00	**1065.18**
Hardwick 60cm Corner Cabinet RH	Matt Anthracite RAL 7016	36.0013	866.00	**1065.18**

Hardwick 90cm Corner Cabinet

Description	Colour	Code	€ Ex VAT	€ Inc VAT
Hardwick 90cm Corner Cabinet LH	Matt White	36.0015	1155.00	**1420.65**
Hardwick 90cm Corner Cabinet RH	Matt White	36.0018	1155.00	**1420.65**
Hardwick 90cm Corner Cabinet LH	Matt Cobalt Blue RAL 5013	36.0067	1155.00	**1420.65**
Hardwick 90cm Corner Cabinet RH	Matt Cobalt Blue RAL 5013	36.0068	1155.00	**1420.65**
Hardwick 90cm Corner Cabinet LH	Matt Anthracite RAL 7016	36.0016	1155.00	**1420.65**
Hardwick 90cm Corner Cabinet RH	Matt Anthracite RAL 7016	36.0019	1155.00	**1420.65**

60cm Left Hand

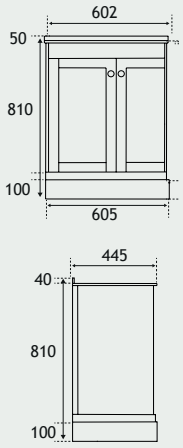

60cm Right Hand

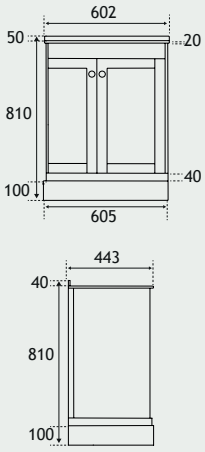

90cm Left Hand

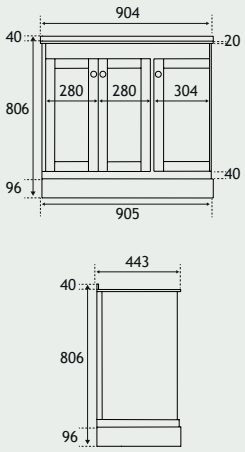

90cm Right Hand

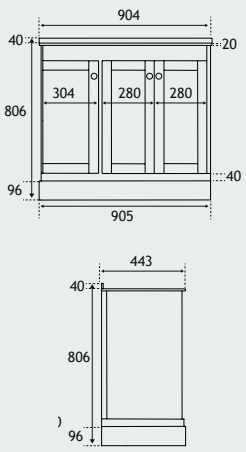

EXTRAS



Description	Code	€ Ex VAT	€ Inc VAT
Vercelli Hand Towel Ring	52.311	58.00	**71.34**

EXTRAS

See page 262 for compatible basins

Hardwick Basins

HARDWICK CORNER BASINS QUARTZ



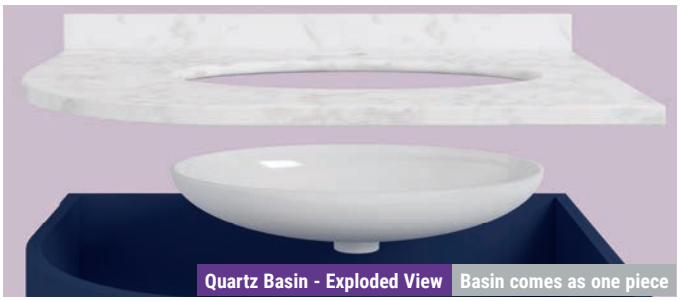

BASINS TECHNICAL

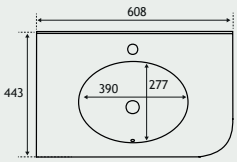

60cm Left Hand Basin

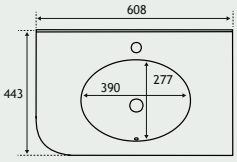

60cm Right Hand Basin

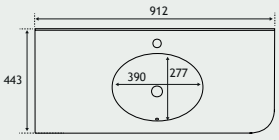

90cm Left Hand Basin

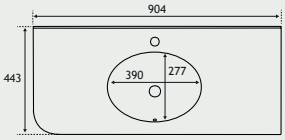

90cm Right Hand Basin

Hardwick Quartz Basins

Description	Colour	Code	€ Ex VAT	€ Inc VAT
Hardwick Quartz Corner 60cm Basin LH	White	36.4003	308.00	**378.84**
Hardwick Quartz Corner 60cm Basin RH	White	36.4004	308.00	**378.84**
Hardwick Quartz Corner 90cm Basin LH	White	36.4005	392.00	**482.16**
Hardwick Quartz Corner 90cm Basin RH	White	36.4006	392.00	**482.16**

HARDWICK CORNER BASINS TRADITIONAL



BASINS TECHNICAL

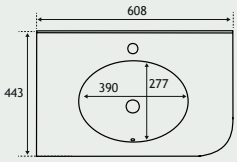

60cm Left Hand Basin

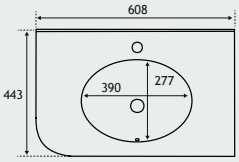

60cm Right Hand Basin

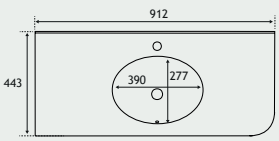

90cm Left Hand Basin

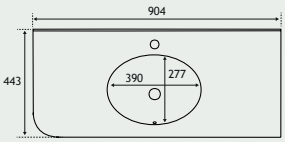

90cm Right Hand Basin

Hardwick Traditional Basins

Description	Colour	Code	€ Ex VAT	€ Inc VAT
Hardwick 60cm Corner Basin LH	White (Plain)	36.0011	268.00	**329.64**
Hardwick 60cm Corner Basin RH	White (Plain)	36.0014	268.00	**329.64**
Hardwick 90cm Corner Basin LH	White (Plain)	36.0017	370.00	**455.10**
Hardwick 90cm Corner Basin RH	White (Plain)	36.0020	370.00	**455.10**

Hardwick Range

HARDWICK 39CM TRADITIONAL UNIT

Our newly designed Hardwick bathroom furniture features a luxurious basin design that flows perfectly with the traditional inspired curved lines and door panels of the vanity unit.

FEATURES
- Soft close system on door
- Traditional design inspired door design
- High quality painted doors
- Internal wooden shelf

FEATURES - BASIN TOPS
- Polymarble basin predrilled with 1 tap hole
- A modern seamless one-piece basin
- Straight basin designs
- Built in internal overflow as standard



39 CM UNIT





Hardwick Traditional Unit

Description	Colour	Code	€ Ex VAT	€ Inc VAT
Hardwick 39cm Unit	Matt White	36.0024	436.00	**536.28**
Hardwick 39cm Unit	Matt Cobalt Blue RAL 5013	36.0070	436.00	**536.28**
Hardwick 39cm Unit	Matt Anthracite RAL 7016	36.0025	436.00	**536.28**

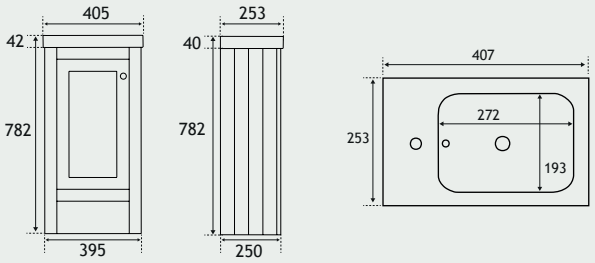

Hardwick Traditional Basins

Description	Colour	Code	€ Ex VAT	€ Inc VAT
Hardwick Traditional 39cm Basin	White	36.0026	132.00	**162.36**

EXTRAS


52.311


52.411

Cloakroom Cavone Extras

Description	Colour	Code	€ Ex VAT	€ Inc VAT
Vercelli Hand Towel Ring	Chrome	52.311	58.00	**71.34**
Asti Soap Dispenser	Chrome	52.411	69.00	**84.87**


93.0019


93.0001

Cloakroom Cavone Extras

Description	Colour	Code	€ Ex VAT	€ Inc VAT
Helston Basin Mono (inc waste)	Smooth Black	93.0019	177.00	**217.71**
Falmouth Basin Mono (inc waste)	Chrome	93.0001	212.00	**260.76**

EXTRAS

Madrid 43 Range

MADRID 43



Madrid 41cm Unit & 43cm Ceramic Top

Ideal for tight spaces - perfect for cloakrooms and en-suites. The mirror is supplied complete with a light cornice and a useful shelf.

FEATURES
- Mirror has integral shelf and light cornice



430mm mirror and light cornice



43cm Madrid Unit With One-Piece Ceramic Top

Description	Code	€ Ex VAT	€ Inc VAT
Madrid 41cm base unit†	1.082	328.00	**403.44**
43cm mirror 1 LED light†	1.086	350.00	**430.50**
Biava Mini basin mono c/w clicker waste†	56.2052	161.00	**198.03**

Note: Unit is 41cm width, Basin is 43cm width.
† While Stocks Last

1.086

*NB Mirror and cornice height does not include plastic shroud

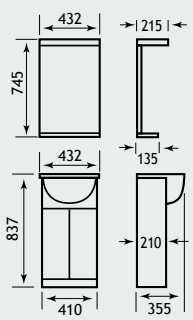

1.082

Madrid 60 Range

MADRID 60



Madrid 58cm Unit & 60cm Cast Marble Top

Plenty of storage with two drawers and two cupboards. The mirror has two LED lamps and a shaver socket, both with pull cord operation. The cornice is supplied separately to the mirror.

FEATURES
- Separate shaver socket

FEATURES - CAST MARBLE TOPS
- Made of 75% natural marble stone
- Repairable if chipped
- Seamless surface, easy to maintain



LED Light cornice with shaver socket.



Madrid 60 1TH cast top

600mm Madrid Unit

Description	Code	€ Ex VAT	€ Inc VAT
Madrid 58cm base unit	1.083	439.00	**539.97**
Madrid 60 1TH **	51.086	278.00	**341.94**
Diamante 60cm mirror *	1.203	210.00	**258.30**
Diamante 60cm LED Cornice	1.204	317.00	**389.91**
Trap for external overflow kit	7.0015	34.00	**41.82**
Flip Top Basin Waste - Unslotted	25.0005	27.00	**33.21**

*Mirror must be fitted with a cornice. **Trap 7.0015 and Unslotted Basin Waste 25.0005 recommended for installation.

For wall mirrors and cabinets see pages 326-351

1.203/1.204

*NB Mirror and cornice height does not include plastic shroud

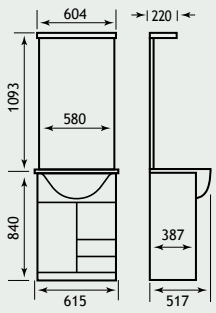

1.083

Madrid 80 Range

MADRID 80



Madrid 70cm Unit & 80cm Cast Marble Top





A flexible combination, the base unit can be used with an 800mm mirror and cornice (the cornice has three lamps and a shaver socket), or with a 600mm mirror (two lamps and a shaver socket) with a 200mm wall cupboard and single shelf (shown left).

FEATURES
- Separate shaver socket

FEATURES - CAST MARBLE TOPS
- Made of 75% natural marble stone
- Repairable if chipped
- Seamless surface, easy to maintain

800mm Madrid Unit

Description	Code	€ Ex VAT	€ Inc VAT
Madrid 70cm base unit	1.084	539.00	**662.97**
Madrid 80 1TH **	51.087	303.00	**372.69**
Trap for external overflow kit	7.0015	34.00	**41.82**
Flip Top Basin Waste - Unslotted	25.0005	27.00	**33.21**
Mirror Options 1			
Diamante 60cm mirror *	1.203	210.00	**258.30**
Diamante 60cm LED Cornice	1.204	317.00	**389.91**
Madrid 20cm wall unit	1.015	210.00	**258.30**
Diamante/Madrid 20cm single shelf	1.217	133.00	**163.59**
Mirror Options 2			
Diamante 80cm mirror *	1.208	241.00	**296.43**
Diamante 80cm LED Cornice	1.209	388.00	**477.24**

*Mirror must be fitted with a cornice. **Trap 7.0015 and Unslotted Basin Waste 25.0005 recommended for installation.

For matching bath panels see page 132-135.
For wall mirrors and cabinets see pages 325-351.

1.203 / 1.204

1.208 / 1.209

*NB Mirror and cornice height does not include plastic shroud

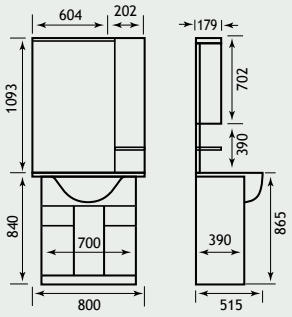

1.084

Madrid 100 Range

MADRID 100



Madrid 90cm Unit & 100cm Cast Marble Top



Space, elegance and lots of storage. The 1000mm unit has the benefit of either a 1000mm mirror with cornice (three lamps and a shaver socket), or a 600mm mirror with cornice (two lamps and a shaver socket) with two 200mm wall cupboards and single shelves.

FEATURES
- Separate shaver socket

FEATURES - CAST MARBLE TOPS
- Made of 75% natural marble stone
- Repairable if chipped
- Seamless surface, easy to maintain

1000mm Madrid Unit

Description	Code	€ Ex VAT	€ Inc VAT
Madrid 90cm base unit	1.085	656.00	**806.88**
Madrid 100 1TH ***	51.088	332.00	**408.36**
Trap for external overflow kit	7.0015	34.00	**41.82**
Flip Top Basin Waste - Unslotted	25.0005	27.00	**33.21**
Mirror Options 1			
Diamante 60cm mirror *	1.203	210.00	**258.30**
Diamante 60cm LED Cornice	1.204	317.00	**389.91**
Madrid 20cm wall unit (each)**	1.015	210.00	**258.30**
Diamante/Madrid 20cm single shelf (each)**	1.217	133.00	**163.59**

*Mirror must be fitted with a cornice. **Note: For Option 1 this line needs to be doubled if two single shelves are required. ***Trap 7.0015 and Unslotted Basin Waste 25.0005 recommended for installation.

1.203 / 1.204
1.208 / 1.209
1.213 / 1.214

*NB Mirror and cornice height does not include plastic shroud

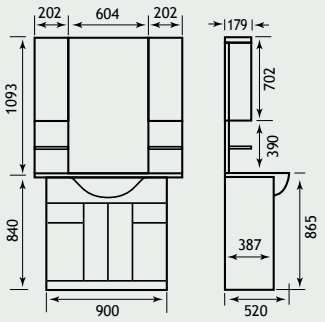

1.085

Description	Code	€ Ex VAT	€ Inc VAT
Mirror Options 2 (not shown)			
Diamante 80cm mirror *	1.208	241.00	**296.43**
Diamante 80cm LED Cornice	1.209	388.00	**477.24**
Madrid 20cm wall unit	1.015	210.00	**258.30**
Diamante/Madrid 20cm single shelf	1.217	133.00	**163.59**
Mirror Options 3			
Diamante 100cm mirror *	1.213	269.00	**330.87**
Diamante 100cm LED Cornice	1.214	416.00	**511.68**

Oslo 39 - Door Unit Range

OSLO 39 WHITE GLOSS TWO DOOR UNIT



Oslo White Gloss creates a stunning impression, a quality carcass with soft close systems on both the doors and drawers. New minimalist stone resin-cast tops allow more depth to the basin than ceramic sinks and are easy to keep clean. Available in various combinations the Oslo range will grace any bathroom.

Oslo 39 Unit White Two Door Unit

Description	Code	€ Ex VAT	€ Inc VAT
Oslo 39cm base unit	1.064	350.00	**430.50**
Oslo/Faro 39 cast top *	51.005	231.00	**284.13**
Oslo 30cm tall cupboard, 2 door	1.294	566.00	**696.18**

Oslo White WC Unit

Description	Code	€ Ex VAT	€ Inc VAT
Oslo WC unit only	1.287	457.00	**562.11**
Oslo WC unit lid	1.075	89.00	**109.47**
Oslo WC unit plinth	1.288	26.00	**31.98**

Extras

Description	Code	€ Ex VAT	€ Inc VAT
Trap for external overflow kit	7.0015	34.00	**41.82**
Flip Top Basin Waste - Unslotted	25.0005	27.00	**33.21**

*Due to depth of the waste area, the trap for external overflow kit & a flip top basin waste (unslotted) are recommended for installation.

FEATURES
- Soft close system on doors

FEATURES - CAST MARBLE TOPS
- Made of 75% natural marble stone
- Repairable if chipped
- Seamless surface, easy to maintain

OSLO 39 ANTHRACITE TWO DOOR UNIT





Oslo Matt Anthracite gives off a modern feel, made of a quality carcass with soft close systems on both the doors and drawers. New minimalist stone resin-cast tops allow more depth to the basin than ceramic sinks and are easy to keep clean. Available in various combinations the Oslo range will grace any bathroom.

Oslo 39 Unit Anthracite Two Door Unit

Description	Code	€ Ex VAT	€ Inc VAT
Oslo 39cm Matt Anthracite base unit	1.754	350.00	**430.50**
Oslo/Faro 39 cast top	51.005	231.00	**284.13**
Status 390 cast top	51.022	231.00	**284.13**
Oslo 30cm tall cupboard Matt Anthracite	1.766	566.00	**696.18**

Oslo Anthracite WC Unit

Description	Code	€ Ex VAT	€ Inc VAT
Oslo WC unit Matt Anthracite	1.759	457.00	**562.11**
Oslo WC unit top Matt Anthracite	1.760	89.00	**109.47**
Oslo WC unit plinth Matt Anthracite	1.761	26.00	**31.98**

Extras

Description	Code	€ Ex VAT	€ Inc VAT
Trap for external overflow kit	7.0015	34.00	**41.82**
Flip Top Basin Waste - Unslotted	25.0005	27.00	**33.21**

*Due to depth of the waste area, the trap for external overflow kit & a flip top basin waste (unslotted) are recommended for installation.

FEATURES
- Soft close system on doors

FEATURES - CAST MARBLE TOPS
- Made of 75% natural marble stone
- Repairable if chipped
- Seamless surface, easy to maintain

1.064/1.754

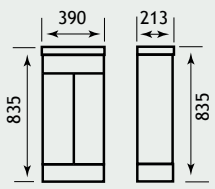

1.294/1.766

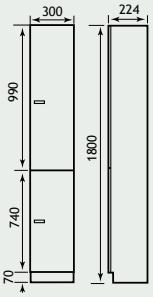



51.005

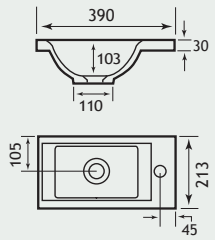

1.287/1.759

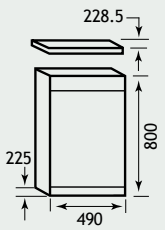

Oslo 39 - Door Unit Range

OSLO 39 DARK WALNUT TWO DOOR UNIT

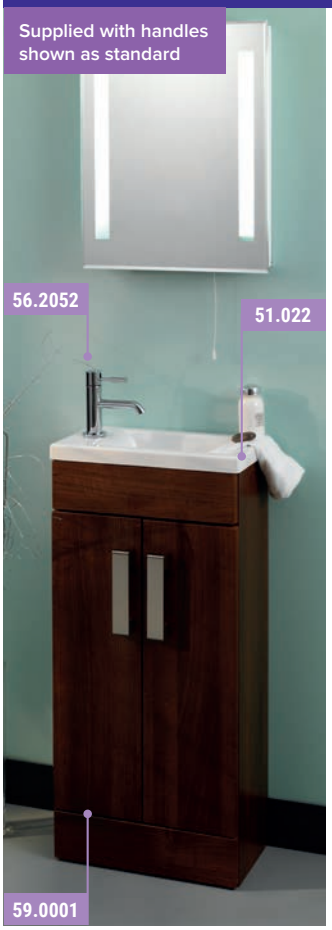



Oslo creates a stunning impression, a quality carcass with soft close systems on both the doors and drawers. New minimalist stone resin-cast tops allow more depth to the basin than ceramic sinks and are easy to keep clean. Available in various combinations the Oslo range will grace any bathroom.

Oslo 39 Unit Dark Walnut & WC Unit

Description	Code	€ Ex VAT	€ Inc VAT
Oslo 39cm base unit*	59.0001	465.00	**571.95**
Biava Mini basin mono c/w clicker waste	56.2052	161.00	**198.03**
Oslo Tall Cistern Unit	59.0004	408.00	**501.84**
Oslo Tall Cistern Unit top	59.0005	76.00	**93.48**

NB Product is vinyl wrapped MDF in dark walnut. *Not compatible with 51.025. For matching bath panels and toilet seats please see page 132-136.

FEATURES
- Soft close system on doors
- Flourescent lights on mirrors

FEATURES - CAST MARBLE TOPS
- Made of 75% natural marbl stone
- Repairable if chipped
- Seamless surface, easy to maintain

59.0001

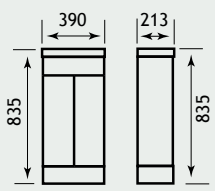

59.0004 & 59.0005

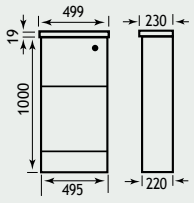

OSLO 39 COMPATIBLE BASINS

Oslo base units create a stunning impression with their simplistic yet sophisticated design. Choosing a basin that matches your selection of tap or accessories unites all the design elements to display an effortless look.



Status 39 Cast Top

Description	Code	€ Ex VAT	€ Inc VAT
Status 39cm cast top*	51.022	231.00	**284.13**



Quantum 39 Cast Top

Description	Code	€ Ex VAT	€ Inc VAT
Quantum 39cm cast top*	51.025	234.00	**287.82**



Oslo 39 Cast Top

Description	Code	€ Ex VAT	€ Inc VAT
Oslo 39cm cast top*	51.005	231.00	**284.13**

*7.0015 & unslotted waste recommended for installation

Extras

Description	Code	€ Ex VAT	€ Inc VAT
Trap for external overflow kit	7.0015	34.00	**41.82**
Flip Top Basin Waste - Unslotted	25.0005	27.00	**33.21**

Oslo 44 - Door/Drawer Unit Range

OSLO 44 WHITE GLOSS TWO DOOR UNIT



The Oslo 44 Unit is both stylish and practical. Soft close systems on doors giving full access to all contents in one smooth action.

Oslo 44 White Two Door Unit			
Description	**Code**	**€ Ex VAT**	**€ Inc VAT**
Oslo 44cm door base unit	1.065	406.00	**499.38**
Contempo handle 128mm (each)	3076	28.00	**34.44**
Status 440 cast top*	51.023	303.00	**372.69**
Oslo 30cm tall cupboard, 2 door	1.294	566.00	**696.18**
Oslo 44 WC			
Description	**Code**	**€ Ex VAT**	**€ Inc VAT**
Oslo WC unit only	1.287	457.00	**562.11**
Oslo WC unit lid	1.075	89.00	**109.47**
Oslo WC unit plinth	1.288	26.00	**31.98**

FEATURES UNIT
- Soft close system on doors

1.065

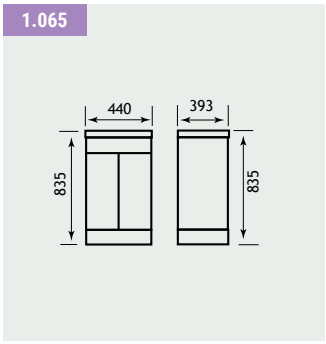

1.287/1.075/1.288

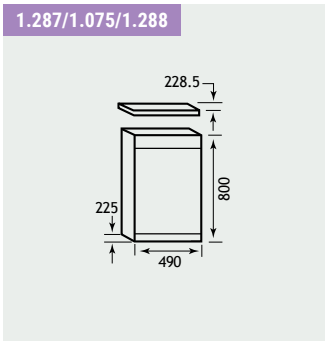

OSLO 44 WHITE TWO DRAWER UNIT



The Oslo 44 Unit is both stylish and practical. Soft close systems on drawers giving full access to all contents in one smooth action.

Oslo 44 White Two Drawer Unit			
Description	**Code**	**€ Ex VAT**	**€ Inc VAT**
Oslo 44cm drawer base unit	1.067	759.00	**933.57**
Contempo handle 128mm (each)	3076	28.00	**34.44**
Status 440 cast top	51.023	303.00	**372.69**
Oslo 30cm tall cupboard, 2 door	1.294	566.00	**696.18**
Extras			
Description	**Code**	**€ Ex VAT**	**€ Inc VAT**
Trap for external overflow kit	7.0015	34.00	**41.82**
Flip Top Basin Waste - Unslotted	25.0005	27.00	**33.21**

FEATURES UNIT
- Soft close system on drawers

1.294/1.766

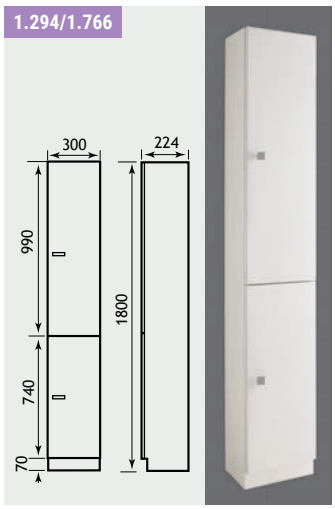



Supplied with handle shown as standard on drawer unit

1.067

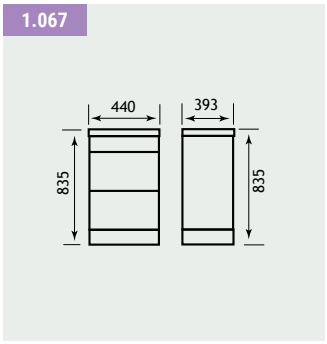

Oslo 44 - Door/Drawer Unit Range

OSLO 44 ANTHRACITE TWO DOOR



The Oslo 44 Unit is both stylish and practical. Soft close systems on doors giving full access to all contents in one smooth action.

Oslo 44 Anthracite Two Door Unit

Description	Code	€ Ex VAT	€ Inc VAT
Oslo 44cm Matt Anthracite door base unit	1.755	408.00	**501.84**
Contempo handle 128mm (each)	3076	28.00	**34.44**
Oslo 30cm tall cupboard Matt Anthracite	1.766	566.00	**696.18**

FEATURES UNIT
- Soft close system on doors


1.755 Supplied with handles shown as standard on door unit


3076 Contempo handle as optional extra on drawer unit (each)

OSLO 44 ANTHRACITE TWO DRAWER UNIT



Oslo 44 Anthracite Two Drawer Unit

Description	Code	€ Ex VAT	€ Inc VAT
Oslo 44cm Matt Anthracite drawer base unit	1.756	759.00	**933.57**
Contempo handle 128mm (each)	3076	28.00	**34.44**
Oslo 30cm tall cupboard Matt Anthracite	1.766	566.00	**696.18**

Oslo Anthracite WC Unit

Description	Code	€ Ex VAT	€ Inc VAT
Oslo WC unit Matt Anthracite	1.759	457.00	**562.11**
Oslo WC unit top Matt Anthracite	1.760	89.00	**109.47**
Oslo WC unit plinth Matt Anthracite	1.761	26.00	**31.98**

OSLO 44 COMPATIBLE BASINS

Oslo base units create a stunning impression with their simplistic yet sophisticated design. Choosing a basin that matches your selection of tap or accessories unites all the design elements to display an effortless look.



51.023

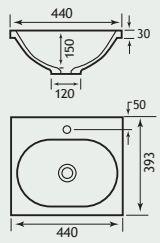

Status 44 Cast Top

Description	Code	€ Ex VAT	€ Inc VAT
Status 44cm cast top*	51.023	303.00	**372.69**



51.026

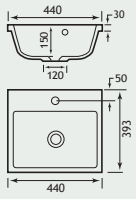

Quantum 44 Cast Top

Description	Code	€ Ex VAT	€ Inc VAT
Quantum 44cm cast top*	51.026	313.00	**384.99**



51.006

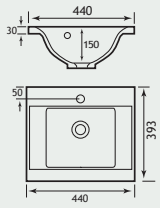

Oslo 44 Cast Top

Description	Code	€ Ex VAT	€ Inc VAT
Oslo 44cm cast top*	51.006	269.00	**330.87**

*7.0015 & unslotted waste recommended for installation

Extras

Description	Code	€ Ex VAT	€ Inc VAT
Trap for external overflow kit	7.0015	34.00	**41.82**
Flip Top Basin Waste - Unslotted	25.0005	27.00	**33.21**

1.755

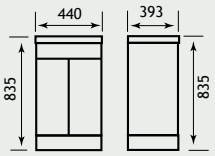

1.756

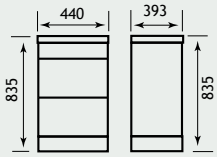

Oslo 58 - Door/Drawer Unit Range

OSLO 58 WHITE TWO DOOR UNIT



Oslo creates a stunning impression, a quality carcass with soft close systems on both the doors and drawers. New minimalist stone resin-cast tops allow more depth to the basin than ceramic sinks and are easy to keep clean. Available in various combinations the Oslo range will grace any bathroom.

Oslo 58 White Two Door Unit

Description	Code	€ Ex VAT	€ Inc VAT
Oslo 58cm door base unit	1.068	461.00	**567.03**
Contempo handle 128mm (each)	3076	28.00	**34.44**
Status 580 cast top	51.024	338.00	**415.74**

Oslo White WC Unit

Description	Code	€ Ex VAT	€ Inc VAT
Oslo WC unit only	1.287	457.00	**562.11**
Oslo WC unit lid	1.075	89.00	**109.47**
Oslo WC unit plinth	1.288	26.00	**31.98**

Extras

Description	Code	€ Ex VAT	€ Inc VAT
Trap for external overflow kit	7.0015	34.00	**41.82**
Flip Top Basin Waste - Unslotted	25.0005	27.00	**33.21**

FEATURES UNIT
- Soft close system on doors



Supplied with handles shown as standard

1.068

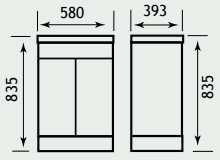



1.075
1.288
1.287

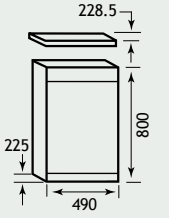

OSLO 58 WHITE TWO DRAWER UNIT



Oslo 58 White Two Drawer Unit

Description	Code	€ Ex VAT	€ Inc VAT
Oslo 58cm drawer base unit	1.069	804.00	**988.92**
Contempo handle 128mm (each)	3076	28.00	**34.44**
Status 580 cast top	51.024	338.00	**415.74**
Oslo 30cm tall cupboard, 2 door	1.294	566.00	**696.18**

Extras

Description	Code	€ Ex VAT	€ Inc VAT
Trap for external overflow kit	7.0015	34.00	**41.82**
Flip Top Basin Waste - Unslotted	25.0005	27.00	**33.21**

FEATURES UNIT
- Soft close system on drawers



Supplied with handles shown as standard.



3076 Contempo handle as optional extra on drawer unit + door.

1.294/1.766

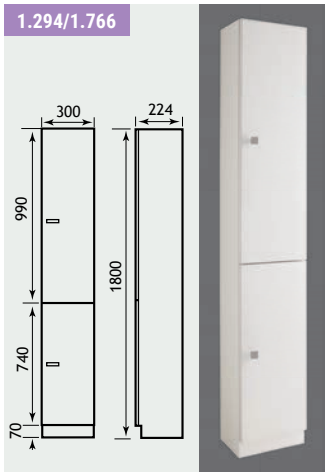

1.069

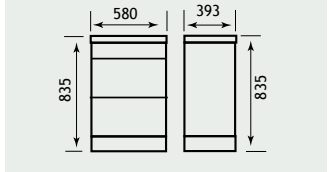

Oslo 58 - Door/Drawer Unit Range

OSLO 58 ANTHRACITE TWO DOOR UNIT



Oslo creates a stunning impression, a quality carcass with soft close systems on both the doors and drawers. New minimalist stone resin-cast tops allow more depth to the basin than ceramic sinks and are easy to keep clean. Available in various combinations the Oslo range will grace any bathroom.

Oslo 58 Anthracite Two Door Unit

Description	Code	€ Ex VAT	€ Inc VAT
Oslo 58cm Matt Anthracite door base unit	1.757	461.00	**567.03**
Contempo handle 128mm (each)	3076	28.00	**34.44**
Oslo 30cm tall cupboard Matt Anthracite	1.766	566.00	**696.18**

FEATURES UNIT
- Soft close system on doors

OSLO 58 ANTHRACITE TWO DRAWER UNIT



Oslo 58 Anthracite Two Drawer Unit

Description	Code	€ Ex VAT	€ Inc VAT
Oslo 58cm Matt Anthracite drawer unit	1.758	804.00	**988.92**
Contempo handle 128mm (each)	3076	28.00	**34.44**
Oslo 30cm tall cupboard Matt Anthracite	1.766	566.00	**696.18**

Oslo Anthracite WC Unit

Description	Code	€ Ex VAT	€ Inc VAT
Oslo WC unit Matt Anthracite	1.759	457.00	**562.11**
Oslo WC unit top Matt Anthracite	1.760	89.00	**109.47**
Oslo WC unit plinth Matt Anthracite	1.761	26.00	**31.98**

1.757

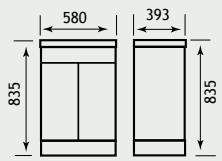

1.758

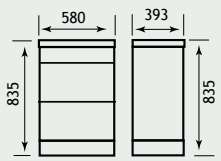

OSLO 58 COMPATIBLE BASINS

Oslo base units create a stunning impression with their simplistic yet sophisticated design. Choosing a basin that matches your selection of tap or accessories unites all the design elements to display an effortless look.



51.024

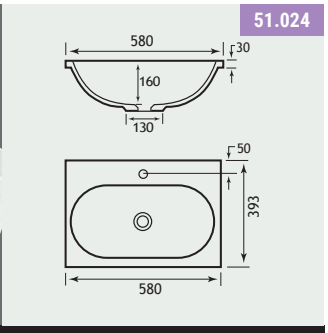

Status 58 Cast Top

Description	Code	€ Ex VAT	€ Inc VAT
Status 58cm cast top*	51.024	338.00	**415.74**



51.027

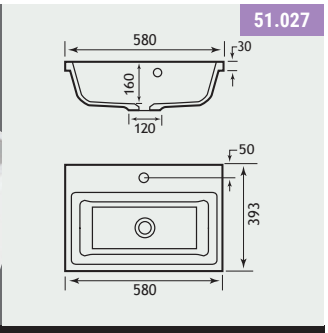

Quantum 58 Cast Top

Description	Code	€ Ex VAT	€ Inc VAT
Quantum 58cm cast top*	51.027	353.00	**434.19**



51.007

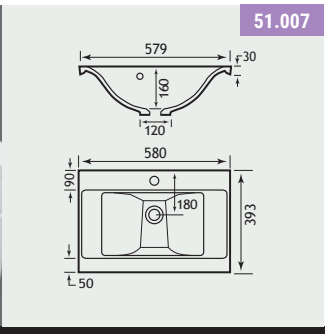

Oslo 58 Cast Top

Description	Code	€ Ex VAT	€ Inc VAT
Oslo 58cm cast top*	51.007	296.00	**364.08**

*7.0015 trap and unslotted basin waste recommended for installation.

FEATURES - CAST MARBLE TOPS
- Made of 75% natural marble stone
- Repairable if chipped
- Seamless surface, easy to maintain



1.757 Supplied with handles shown as standard on door unit



3076 Contempo handle as optional extra on drawer unit and door

Extras

Description	Code	€ Ex VAT	€ Inc VAT
Trap for external overflow kit	7.0015	34.00	**41.82**
Flip Top Basin Waste - Unslotted	25.0005	27.00	**33.21**

Oslo 58 - Door/Drawer Unit Range

OSLO 58 DARK WALNUT TWO DOOR UNIT



OSLO 58 DARK WALNUT TWO DRAWER UNIT





Pan for illustration purposes only

Oslo creates a stunning impression, a quality carcass with soft close systems on both the doors and drawers. New minimalist stone resin-cast tops allow more depth to the basin than ceramic sinks and are easy to keep clean. Available in various combinations the Oslo range will grace any bathroom.

Oslo 58 Dark Walnut Two Door Unit

Description	Code	€ Ex VAT	€ Inc VAT
Oslo 58cm door base unit	59.0002	516.00	**634.68**
Oslo 580 cast top	51.007	296.00	**364.08**

Oslo 58 Dark Walnut Two Drawer Unit

Description	Code	€ Ex VAT	€ Inc VAT
Oslo 58cm drawer base unit	59.0003	642.00	**789.66**
Status 580 cast top	51.024	338.00	**415.74**

Oslo 58 Dark Walnut WC Unit

Description	Code	€ Ex VAT	€ Inc VAT
Oslo Tall Cistern Unit	59.0004	408.00	**501.84**
Oslo Tall Cistern Unit Top	59.0005	76.00	**93.48**
Collindale Rimless Comfort Height BTW Pan	26.0068	355.00	**436.65**
Bijou / Collindale Soft Close Seat	26.0070	115.00	**141.45**

*Due to depth of the waste area, the trap for external overflow kit & a flip top basin waste (unslotted) are recommended for installation.

NB Product is vinyl wrapped MDF in dark walnut.
For matching bath panels and toilet seats please see page 132-136.

Extras

Description	Code	€ Ex VAT	€ Inc VAT
Trap for external overflow kit	7.0015	34.00	**41.82**
Flip Top Basin Waste - Unslotted	25.0005	27.00	**33.21**

FEATURES - UNIT
- Soft close system on doors and drawers

59.0002

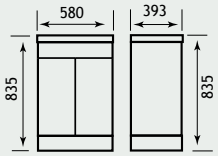

59.0004 & 59.0005

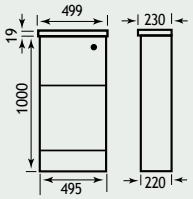

59.0003

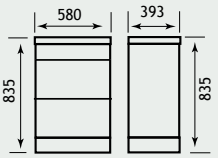



Contempo handles come as standard in this Unit

Oslo 58 - Door/Drawer Unit Range

OSLO 58 COMPATIBLE BASINS

Oslo base units create a stunning impression with their simplistic yet sophisticated design. Choosing a basin that matches your selection of tap or accessories unites all the design elements to display an effortless look.



51.024

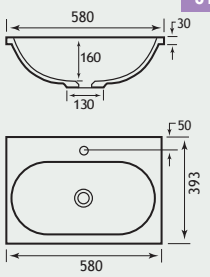

Status 58 Cast Top

Description	Code	€ Ex VAT	€ Inc VAT
Status 580 cast top*	51.024	338.00	**415.74**



51.007

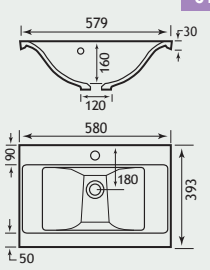

Oslo 58 Cast Top

Description	Code	€ Ex VAT	€ Inc VAT
Oslo 58 cast top*	51.007	296.00	**364.08**

*7.0015 trap and unslotted basin waste recommended for installation.

FEATURES - CAST MARBLE TOPS
- Made of 75% natural marble stone
- Repairable if chipped
- Seamless surface, easy to maintain

Status Cast Top - 51.024



BISCAY BATH RANGE Complete the LOOK

Just like the Status basin top, the Biscay Baths bring a unique perspective to bathroom design the and adds a touch of luxury with its soft curves.

Left hand shown



Flip to the Bath section to find your ideal Biscay bath >> Page: 70-79

Oslo 80 - Drawer Unit Range

OSLO 80 TWO DRAWER UNIT



The two drawer Oslo Unit is both stylish and practical. The drawers glide open and shut on soft close systems giving full access to all contents in one smooth action.

Oslo 80 Base And Cast Top			
Description	**Code**	**€ Ex VAT**	**€ Inc VAT**
Oslo 800mm drawer base unit	1.076	873.00	**1073.79**
Oslo 80 cast top*	51.008	374.00	**460.02**
Leven 800 x 600 bluetooth mirror	56.1083	583.00	**717.09**
Sorrento 70cm mirror †	1.419	238.00	**292.74**
Sorrento 80cm LED cornice	1.522	370.00	**455.10**
Sorrento 800mm 'Wave' action infra red LED cornice	1.219	471.00	**579.33**
Oslo WC Unit			
Description	**Code**	**€ Ex VAT**	**€ Inc VAT**
Oslo WC unit only	1.287	457.00	**562.11**
Oslo WC unit lid	1.075	89.00	**109.47**
Oslo WC unit plinth	1.288	26.00	**31.98**
Extras			
Description	**Code**	**€ Ex VAT**	**€ Inc VAT**
Trap for external overflow kit	7.0015	34.00	**41.82**
Flip Top Basin Waste - Unslotted	25.0005	27.00	**33.21**

FEATURES
- Soft close system on drawers

FEATURES - CAST MARBLE TOPS
- Made of 75% natural marble stone
- Repairable if chipped
- Seamless surface, easy to maintain

† Mirror must be fitted with a cornice. *Due to depth of the waste area, the trap for external overflow kit & a flip top basin waste (unslotted) are recommended for installation.



Also compatible with the Oslo 80 is the Sorrento mirror and cornice as shown above. For wall mirrors and cabinets see pages 326-351.

1.076

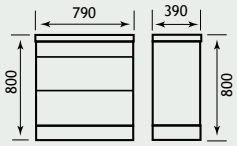



Sorrento cornices are now available with an option of 'Wave' action infra-red sensor to activate lights.

51.008

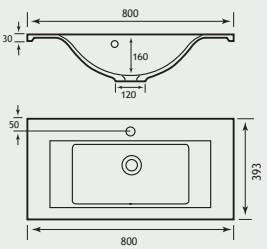

Oslo 100 - Drawer Unit Range

OSLO 100 SINGLE BOWL TWO DRAWER UNIT



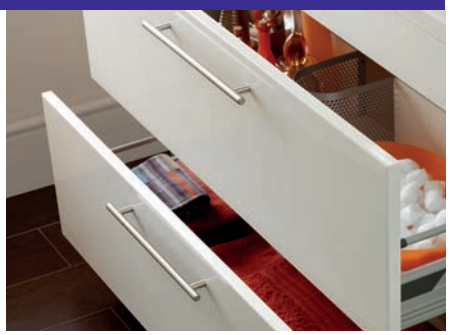



The two drawer Oslo Unit is both stylish and practical. The drawers glide open giving full access to all contents in one smooth action.

Oslo 100 Base and Single Bowl Cast Top			
Description	**Code**	**€ Ex VAT**	**€ Inc VAT**
Oslo 1000mm drawer base unit for single bowl	1.081	933.00	**1147.59**
Oslo 100 cast top*	51.009	422.00	**519.06**
Plain Mirror 555 x 1000	40.0020	135.00	**166.05**
Oslo WC Unit			
Description	**Code**	**€ Ex VAT**	**€ Inc VAT**
Oslo WC unit only	1.287	457.00	**562.11**
Oslo WC unit lid	1.075	89.00	**109.47**
Oslo WC unit plinth	1.288	26.00	**31.98**
Extras			
Description	**Code**	**€ Ex VAT**	**€ Inc VAT**
Trap for external overflow kit	7.0015	34.00	**41.82**
Flip Top Basin Waste - Unslotted	25.0005	27.00	**33.21**

FEATURES - CAST MARBLE TOPS
- Made of 75% natural marble stone
- Repairable if chipped
- Seamless surface, easy to maintain

*Due to depth of the waste area, the trap for external overflow kit & a flip top basin waste (unslotted) are recommended for installation.

51.009

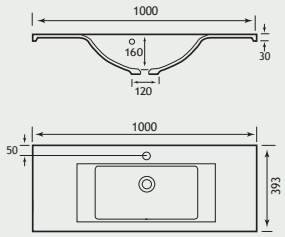

1.081

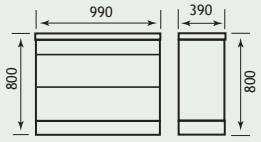

1.287/1.075/1.288

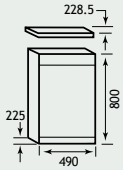



Oslo 100 - Drawer Unit Range

OSLO 100 DOUBLE BOWL TWO DRAWER UNIT



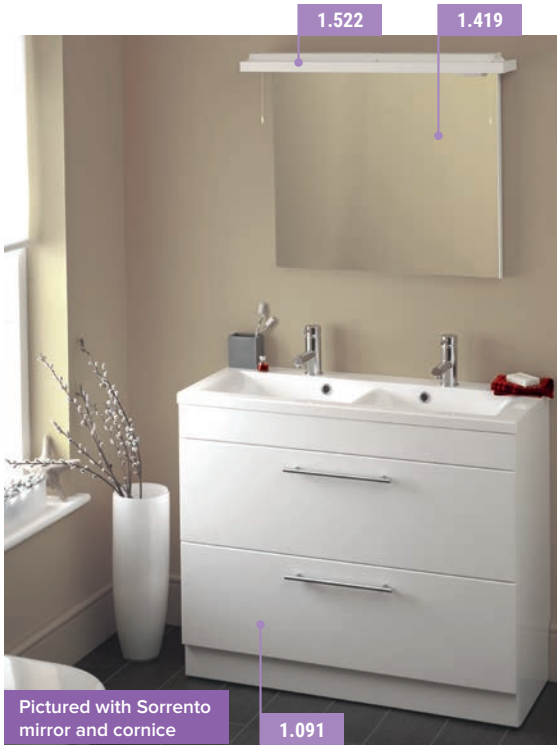



The two drawer Oslo Unit is both stylish and practical. The drawers glide open giving full access to all contents in one smooth action. Also compatible with the Oslo 100 is the Sorrento mirror and cornice as shown left. For wall mirrors and cabinets see pages 334-359. The internal design of these drawers may change during the lifetime of this brochure.

Oslo 100 Base and Double Bowl Cast Top			
Description	**Code**	**€ Ex VAT**	**€ Inc VAT**
Oslo 1000mm drawer base unit for double bowl	1.091	933.00	**1147.59**
Oslo 100 double cast top*	51.010	476.00	**585.48**
Sorrento 70cm mirror	1.419	238.00	**292.74**
Sorrento 80cm LED cornice	1.522	370.00	**455.10**
Sorrento 800mm 'Wave' action infra red LED cornice	1.219	471.00	**579.33**
Plain Mirror 555 x 1000	40.0020	135.00	**166.05**
Oslo WC Unit			
Description	**Code**	**€ Ex VAT**	**€ Inc VAT**
Oslo WC unit only	1.287	457.00	**562.11**
Oslo WC unit lid	1.075	89.00	**109.47**
Oslo WC unit plinth	1.288	26.00	**31.98**
Extras			
Description	**Code**	**€ Ex VAT**	**€ Inc VAT**
Trap for external overflow kit	7.0015	34.00	**41.82**
Flip Top Basin Waste - Unslotted	25.0005	27.00	**33.21**
*2 x 7.0015 and 2 x wastes required for item 51.010 double bowl.			

FEATURES - CAST MARBLE TOPS
- Made of 75% natural marble stone
- Repairable if chipped
- Seamless surface, easy to maintain



Sorrento cornices are now available with an option of 'Wave' action infra-red sensor to activate lights.

1.419/1.522

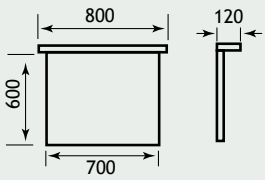

51.008

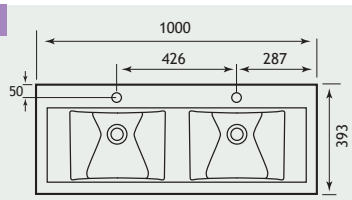

1.091

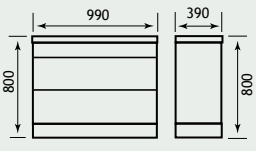

1.287/1.075/1.288

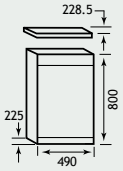

Oslo Corner WC Unit & Cupboards

OSLO CORNER WC UNIT



These versatile, modular wall cupboards are ideal for family needs giving everyone their own storage space. The cupboards are reversible, feature soft close doors and can be used in any combination.

Oslo Corner WC

Description	Code	€ Ex VAT	€ Inc VAT
Oslo WC unit only *	1.287	457.00	**562.11**
Oslo corner unit lid	1.267	163.00	**200.49**
Oslo WC unit plinth	1.288	26.00	**31.98**
Oslo square 400mm wall cupboard	1.263	282.00	**346.86**
Oslo square 400mm mirror wall cupboard	1.264	296.00	**364.08**
Oslo wall cupboard 400 x 800mm	1.265	355.00	**436.65**
Oslo wall cupboard 400 x 1000mm	1.266	384.00	**472.32**
Vantage Plain Hidden Cistern CP Push Button	17.001	252.00	**309.96**
Eastbrook Jacket Hidden Cistern - Bottom Inlet	53.001	157.00	**193.11**
Vantage Hidden Cistern with Jacket	17.3029	290.00	**356.70**
Oslo 30cm tall cupboard, 2 door	1.294	566.00	**696.18**

*NB Price does not include BTW pan or seat. Hidden cistern, corner unit lid and plinth sold separately.

Oslo Extras

Description	Code	€ Ex VAT	€ Inc VAT
Upper panel for 1.287 Oslo WC unit	1.99070	87.00	**104.40**
Lower panel Oslo 50cm tall cistern unit	1.99046	78.00	**93.60**
Oslo corner unit lid *	1.267	163.00	**200.49**
Oslo WC unit lid	1.075	89.00	**109.47**

FEATURES
- Soft close system on doors
- Wall cupboards are reversible
- Modular versatile system

OSLO WALL CUPBOARDS

1.294



1.294

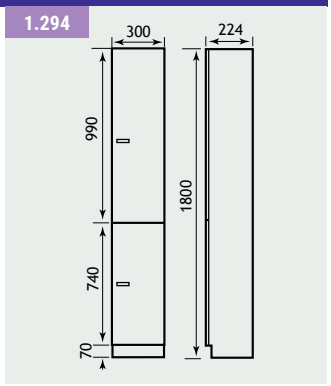

800 x 400mm cabinet



1.265

400 x 400mm unit with plain door



1.263

1000x400mm Cabinet

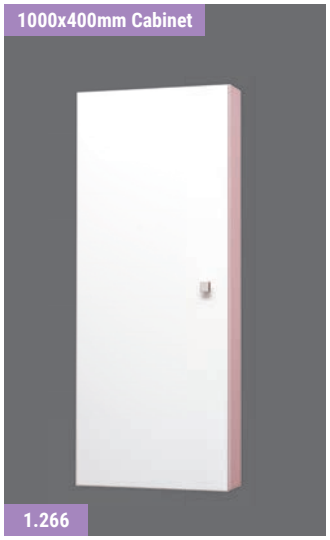

1.266

An 800mm unit with two mirrored 400mm units makes a useful combination



1.265/1.264 x 2

Oslo Cistern & Units

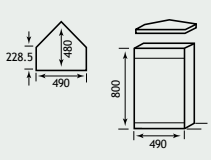

1.287/1.267/1.288

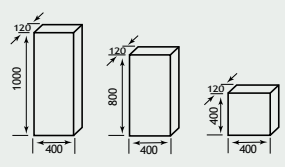

1.266 | 1.265 | 1.263/1.264

Oslo 44 - Internal Drawer / Push Drawer

OSLO 44 INTERNAL DRAWER UNIT



Compatible 440 Basin Tops on page 281 >>

Oslo unit featuring a hidden internal drawer to maximise storage. For compatible basins, please see opposite page.

FEATURES - UNIT
- Soft close system on drawers
- Three drawers in total

1.767

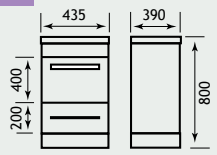



Oslo 44 Internal Drawer Unit

Description	Code	€ Ex VAT	€ Inc VAT
Oslo 44 Unit with Internal Drawer	1.767	808.00	**993.84**

OSLO 44 WALL HUNG INTERNAL DRAWER UNIT



Compatible 440 Basin Tops on page 281 >>

Oslo unit featuring a hidden internal drawer to maximise storage. For compatible basins, please see opposite page.

FEATURES - UNIT
- Soft close system on drawers
- Two drawers in total

1.801

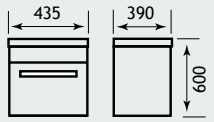



Oslo 44 Wall Hung Internal Drawer Unit

Description	Code	€ Ex VAT	€ Inc VAT
Oslo 44 Wall Hung Unit with Internal Drawer	1.801	653.00	**803.19**

OSLO 44 PUSH DRAWER UNIT



Compatible 440 Basin Tops on page 281 >>

Oslo Unit featuring a double push drawer mechanism for a sleek and contemporary look.

FEATURES - UNIT
- Soft close system on drawers
- Two drawers in total

1.805

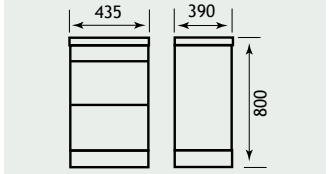

Oslo 44 Push Drawer Unit

Description	Code	€ Ex VAT	€ Inc VAT
Oslo 44 Push Drawer Unit	1.805	623.00	**766.29**

Oslo 44 - Internal Drawer / Push Drawer

OSLO 44 WALL HUNG PUSH DRAWER UNIT



Oslo Unit featuring a double push drawer mechanism for a sleek and contemporary look.

FEATURES - UNIT
- Soft close system on drawers
- Two drawers in total

1.809

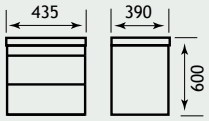

Oslo 44 Wall Hung Push Drawer Unit

Description	Code	€ Ex VAT	€ Inc VAT
Oslo 44 Wall Hung Push Drawer Unit	1.809	588.00	**723.24**

Complete the LOOK

HELSTON BASIN MONO



93.0010

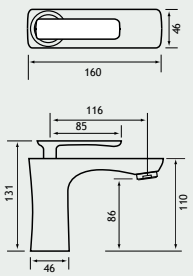

Description	Code	€ Ex VAT	€ Inc VAT
Helston Basin Mono (inc waste) Chrome	93.0010	161.00	**198.03**

For additional Helston colour options, see page 858.

OSLO WC UNIT



1.287/1.075/1.288

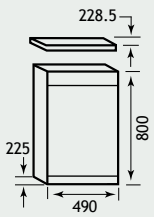

Description	Code	€ Ex VAT	€ Inc VAT
Oslo WC unit only	1.287	457.00	**562.11**
Oslo WC unit lid	1.075	89.00	**109.47**
Oslo WC unit plinth	1.288	26.00	**31.98**

OSLO 44 COMPATIBLE BASINS

Oslo base units create a stunning impression with their simplistic yet sophisticated design. Choosing a basin that matches your selection of tap or accessories unites all design elements to display an effortless look.



51.023

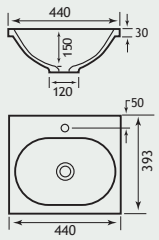

Status 44 Cast Top

Description	Code	€ Ex VAT	€ Inc VAT
Status 44cm cast top*	51.023	303.00	**372.69**



51.026

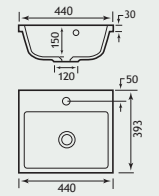

Quantum 44 Cast Top

Description	Code	€ Ex VAT	€ Inc VAT
Quantum 44cm cast top*	51.026	313.00	**384.99**



51.006

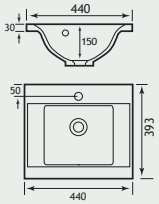

Oslo 44 Cast Top

Description	Code	€ Ex VAT	€ Inc VAT
Oslo 44cm cast top*	51.006	269.00	**330.87**

FEATURES - CAST MARBLE TOPS
- Made of 75% natural marble stone
- Repairable if chipped
- Seamless surface, easy to maintain

Extras

Description	Code	€ Ex VAT	€ Inc VAT
Trap for external overflow kit	7.0015	34.00	**41.82**
Flip Top Basin Waste - Unslotted	25.0005	27.00	**33.21**

*7.0015 trap and unslotted basin waste recommended for installation.

Oslo 58 - Internal Drawer / Push Drawer

OSLO 58 INTERNAL DRAWER UNIT



Compatible 580 Basin Tops on page 283 >>

Oslo unit featuring a hidden internal drawer to maximise storage. For compatible basins, please see opposite page.

FEATURES - UNIT
- Soft close system on drawers
- Three drawers in total

1.768

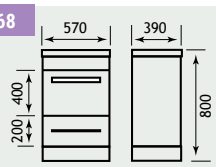



Oslo 58 Internal Drawer Unit			
Description	Code	€ Ex VAT	€ Inc VAT
Oslo 58 Unit with Internal Drawer	1.768	885.00	**1088.55**

OSLO 58 WALL HUNG INTERNAL DRAWER UNIT



Compatible 580 Basin Tops on page 283 >>

Oslo unit featuring a hidden internal drawer to maximise storage. For compatible basins, please see opposite page.

FEATURES - UNIT
- Soft close system on drawers
- Two drawers in total

1.802

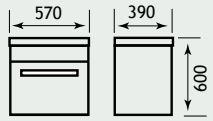



Oslo 58 Wall Hung Internal Drawer Unit			
Description	Code	€ Ex VAT	€ Inc VAT
Oslo 58 Wall Hung Unit with Internal Drawer	1.802	723.00	**889.29**

OSLO 58 PUSH DRAWER UNIT



Compatible 580 Basin Tops on page 283 >>

Oslo Unit featuring a double push drawer mechanism for a sleek and contemporary look.

FEATURES - UNIT
- Soft close system on drawers
- Three drawers in total

1.806

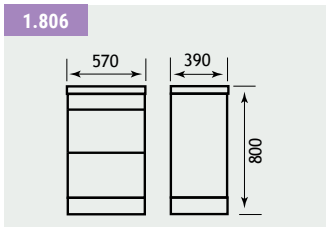

Oslo 58 Push Drawer Unit			
Description	Code	€ Ex VAT	€ Inc VAT
Oslo 58 Push Drawer Unit	1.806	671.00	**825.33**

Oslo 58 - Internal Drawer / Push Drawer

OSLO 58 WALL HUNG PUSH DRAWER UNIT



Oslo Unit featuring a double push drawer mechanism for a sleek and contemporary look.

FEATURES - UNIT
- Soft close system on drawers
- Two drawers in total

1.810

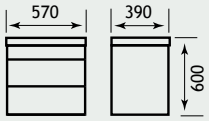

Oslo 58 Wall Hung Push Drawer Unit

Description	Code	€ Ex VAT	€ Inc VAT
Oslo 58 Wall Hung Push Drawer Unit	1.810	628.00	**772.44**

Complete the LOOK

HELSTON BASIN MONO



93.0010

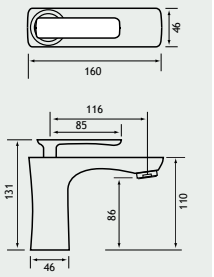

Description	Code	€ Ex VAT	€ Inc VAT
Helston Basin Mono (inc waste) Chrome	93.0010	161.00	**198.03**

OSLO WC UNIT



1.287/1.075/1.288

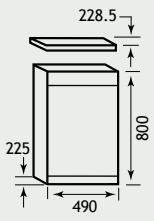

Description	Code	€ Ex VAT	€ Inc VAT
Oslo WC unit only	1.287	457.00	**562.11**
Oslo WC unit lid	1.075	89.00	**109.47**
Oslo WC unit plinth	1.288	26.00	**31.98**

OSLO 58 COMPATIBLE BASINS

Oslo base units create a stunning impression with their simplistic yet sophisticated design. Choosing a basin that matches your selection of tap or accessories unites all design elements to display an effortless look.



51.024

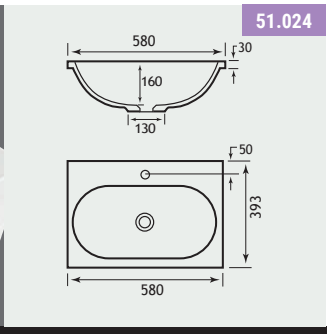

Status 58 Cast Top

Description	Code	€ Ex VAT	€ Inc VAT
Status 58cm cast top*	51.024	338.00	**415.74**



51.027

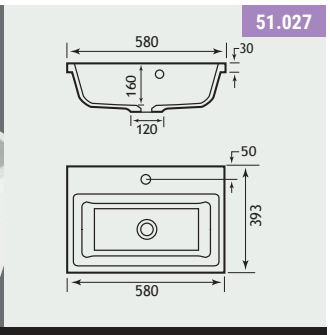

Quantum 58 Cast Top

Description	Code	€ Ex VAT	€ Inc VAT
Quantum 58cm cast top*	51.027	353.00	**434.19**



51.007

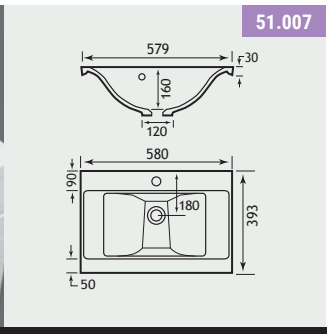

Oslo 58 Cast Top

Description	Code	€ Ex VAT	€ Inc VAT
Oslo 58c cast top*	51.007	296.00	**364.08**

FEATURES - CAST MARBLE TOPS
- Made of 75% natural marble stone
- Repairable if chipped
- Seamless surface, easy to maintain

Extras

Description	Code	€ Ex VAT	€ Inc VAT
Trap for external overflow kit	7.0015	34.00	**41.82**
Flip Top Basin Waste - Unslotted	25.0005	27.00	**33.21**

*7.0015 trap and unslotted basin waste recommended for installation.

Oslo 80 - Internal Drawer / Push Drawer Range

OSLO 80 INTERNAL DRAWER UNIT



Oslo unit featuring a hidden internal drawer to maximise storage. For compatible basin, please see opposite page.

FEATURES - UNIT
- Soft close system on drawers
- Three drawers in total

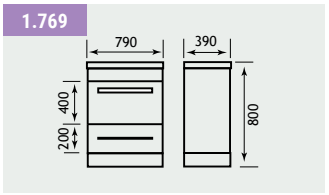



Oslo 80 Internal Drawer Unit

Description	Code	€ Ex VAT	€ Inc VAT
Oslo 80 Unit with Internal Drawer	1.769	990.00	**1217.70**
Oslo 80 cast top	51.008	374.00	**460.02**

OSLO 80 WALL HUNG INTERNAL DRAWER UNIT



Oslo unit featuring a hidden internal drawer to maximise storage. For compatible basin, please see opposite page.

FEATURES - UNIT
- Soft close system on drawers
- Two drawers in total

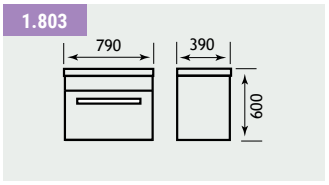



Oslo 80 Wall Hung Internal Drawer Unit

Description	Code	€ Ex VAT	€ Inc VAT
Oslo 80 Wall Hung Unit with Internal Drawer	1.803	828.00	**1018.44**
Oslo 80 cast top	51.008	374.00	**460.02**

OSLO 80 PUSH DRAWER UNIT



Oslo Unit featuring a double push drawer mechanism for a sleek and contemporary look.

FEATURES - UNIT
- Soft close system on drawers
- Two drawers in total

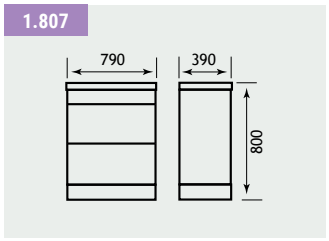

Oslo 80 Push Drawer Unit

Description	Code	€ Ex VAT	€ Inc VAT
Oslo 80 Push Drawer Unit	1.807	758.00	**932.34**
Oslo 80 cast top	51.008	374.00	**460.02**

Oslo 80 - Internal Drawer / Push Drawer

OSLO 80 WALL HUNG PUSH DRAWER UNIT



Oslo Unit featuring a double push drawer mechanism for a sleek and contemporary look.

FEATURES - UNIT
- Soft close system on drawers
- Two drawers in total

1.811

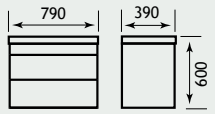

Oslo 80 Wall Hung Push Drawer Unit

Description	Code	€ Ex VAT	€ Inc VAT
Oslo 80 Wall Hung Push Drawer Unit	1.811	682.00	**838.86**

Complete the LOOK

HELSTON BASIN MONO



93.0010

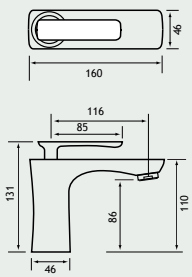

Description	Code	€ Ex VAT	€ Inc VAT
Helston Basin Mono (inc waste) Chrome	93.0010	161.00	**198.03**

OSLO WC UNIT



1.287/1.075/1.288

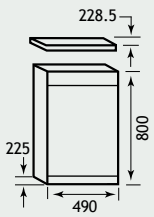

Description	Code	€ Ex VAT	€ Inc VAT
Oslo WC unit only	1.287	457.00	**562.11**
Oslo WC unit lid	1.075	89.00	**109.47**
Oslo WC unit plinth	1.288	26.00	**31.98**

OSLO 80 BASIN

Oslo base units create a stunning impression with their simplistic yet sophisticated design. Choosing a basin that matches your selection of tap or accessories unites all design elements to display an effortless look.



51.008

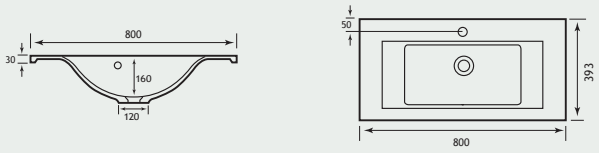

Oslo 80 Cast Top

Description	Code	€ Ex VAT	€ Inc VAT
Oslo 80 cast top	51.008	374.00	**460.02**

FEATURES - CAST MARBLE TOPS
- Made of 75% natural marble stone
- Repairable if chipped
- Seamless surface, easy to maintain

Extras

Description	Code	€ Ex VAT	€ Inc VAT
Trap for external overflow kit	7.0015	34.00	**41.82**
Flip Top Basin Waste - Unslotted	25.0005	27.00	**33.21**

*7.0015 trap and unslotted basin waste recommended for installation.

Oslo 100 - Internal Drawer / Push Drawer

OSLO 100 INTERNAL DRAWER UNIT



Oslo unit featuring a hidden internal drawer to maximise storage. For compatible basin, please see opposite page.

FEATURES - UNIT
- Soft close system on drawers
- Three drawers in total



1.770

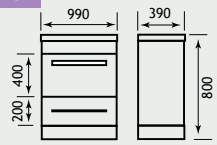

Oslo 100 Internal Drawer Unit

Description	Code	€ Ex VAT	€ Inc VAT
Oslo 100 Unit with Internal Drawer	1.770	1090.00	**1340.70**
Oslo 100 cast top	51.009	422.00	**519.06**

OSLO 100 WALL HUNG INTERNAL DRAWER UNIT



Oslo unit featuring a hidden internal drawer to maximise storage. For compatible basin, please see opposite page.

FEATURES - UNIT
- Soft close system on drawers
- Two drawers in total



1.804

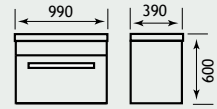

Oslo 100 Wall Hung Internal Drawer Unit

Description	Code	€ Ex VAT	€ Inc VAT
Oslo 100 Wall Hung Unit with Internal Drawer	1.804	920.00	**1131.60**
Oslo 100 cast top	51.009	422.00	**519.06**

OSLO 100 PUSH DRAWER UNIT



Oslo Unit featuring a double push drawer mechanism for a sleek and contemporary look.

FEATURES - UNIT
- Soft close system on drawers
- Two drawers in total

1.808

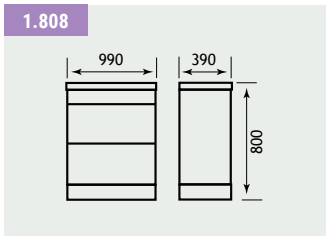

Oslo 100 Push Drawer Unit

Description	Code	€ Ex VAT	€ Inc VAT
Oslo 100 Push Drawer Unit	1.808	819.00	**1007.37**
Oslo 100 cast top	51.009	422.00	**519.06**

Oslo 100 - Internal Drawer / Push Drawer

OSLO 100 WALL HUNG PUSH DRAWER UNIT



Oslo Unit featuring a double push drawer mechanism for a sleek and contemporary look.

FEATURES - UNIT
- Soft close system on drawers
- Two drawers in total

1.812

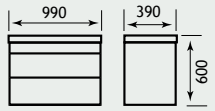

Oslo 100 Wall Hung Push Drawer Unit

Description	Code	€ Ex VAT	€ Inc VAT
Oslo 100 Wall Hung Push Drawer Unit	1.812	728.00	**895.44**

Complete the LOOK

HELSTON BASIN MONO



93.0010

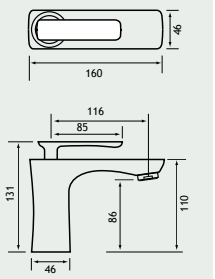

Description	Code	€ Ex VAT	€ Inc VAT
Helston Basin Mono (inc waste) Chrome	93.0010	161.00	**198.03**

OSLO WC UNIT



1.287/1.075/1.288

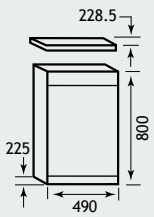

Description	Code	€ Ex VAT	€ Inc VAT
Oslo WC unit only	1.287	457.00	**562.11**
Oslo WC unit lid	1.075	89.00	**109.47**
Oslo WC unit plinth	1.288	26.00	**31.98**

OSLO 100 BASIN

Oslo base units create a stunning impression with their simplistic yet sophisticated design. Choosing a basin that matches your selection of tap or accessories unites all design elements to display an effortless look.



51.009

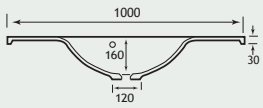

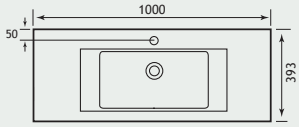

Oslo 100 Cast Top

Description	Code	€ Ex VAT	€ Inc VAT
Oslo 100cm cast top*	51.009	422.00	**519.06**

Extras

Description	Code	€ Ex VAT	€ Inc VAT
Trap for external overflow kit	7.0015	34.00	**41.82**
Flip Top Basin Waste - Unslotted	25.0005	27.00	**33.21**

*7.0015 trap and unslotted basin waste recommended for installation.

Oslo Max Range

OSLO MAX CORNER BASE UNIT



Oslo Max

Description	Code	€ Ex VAT	€ Inc VAT
Oslo Max Corner Base Unit LH	1.301	693.00	**852.39**
Oslo Max Corner Base Unit RH	1.302	693.00	**852.39**
Oslo Max cistern unit	1.303	461.00	**567.03**
Oslo Max Long top LH *	51.039	489.00	**601.47**
Oslo Max Long top RH *	51.040	489.00	**601.47**
Oslo Max Single top LH *	51.041	346.00	**425.58**
Oslo Max Single top RH *	51.042	346.00	**425.58**
Bonito Slab top 600 for WC unit	51.021	173.00	**212.79**

Plinth included. *Due to depth of the waste area, the trap for external overflow kit & a flip top basin waste (unslotted) are recommended for installation.

Extras

Description	Code	€ Ex VAT	€ Inc VAT
Trap for external overflow kit	7.0015	34.00	**41.82**
Flip Top Basin Waste - Unslotted	25.0005	27.00	**33.21**
Bivieve 600 x 800mm LED Mirror	40.1013	336.00	**261.60**

*7.0015 trap and unslotted basin waste recommended for installation.

BTW Pan Extras

Description	Code	€ Ex VAT	€ Inc VAT
Vantage Plain Hidden Cistern CP Push Button	17.001	252.00	**309.96**
Vantage Hidden Cistern with Jacket	17.3029	290.00	**356.70**
Eastbrook Jacket Hidden Cistern - Bottom Inlet	53.001	157.00	**193.11**
Flexible WC Connector for BTW Pans †	2.009	56.00	**68.88**

†Pan connector 2.009 is recommended for use with our BTW pans.

51.041/51.042 (Left hand shown)

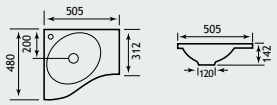

51.04051.039 (Right hand shown)

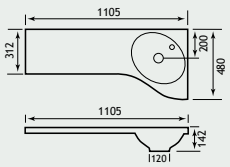

1.301/1.302 (Left hand shown)

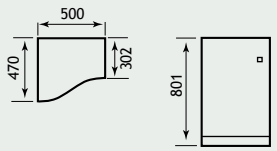

1.303

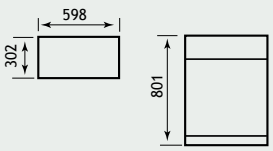

Oslo Combination Range

OSLO COMBINATION UNIT



Left hand shown 29.0118

A quirky all-in-one unit with WC and basin combined to maximise restricted space.

Oslo Combination

Description	Code	€ Ex VAT	€ Inc VAT
Oslo Combination Unit LH	29.0118	373.00	**458.79**
Oslo Combination Unit RH	29.0128	373.00	**458.79**
Duo Compact Cistern	7.0002	118.00	**145.14**

NB. Pan, seat, cistern, basin and tap all sold separately, but plain top is included.

Compatible Basins

Description	Code	€ Ex VAT	€ Inc VAT
Oslo/Faro 39 cast top *	51.005	231.00	**284.13**
Status 390 cast top *	51.022	231.00	**284.13**
Flip Top Basin Waste - Unslotted	25.0005	27.00	**33.21**

*Due to depth of the waste area, the trap for external overflow kit & a flip top basin waste (unslotted) are recommended for installation.

Extras

Description	Code	€ Ex VAT	€ Inc VAT
Trap for external overflow kit	7.0015	34.00	**41.82**
Flip Top Basin Waste - Unslotted	25.0005	27.00	**33.21**

FEATURES - CAST MARBLE TOPS
- Made of 75% natural marble stone
- Repairable if chipped
- Seamless surface, easy to maintain



Right hand shown 29.0128

Oslo Combi Range

OSLO CORNER COMBI

VARIANT - A

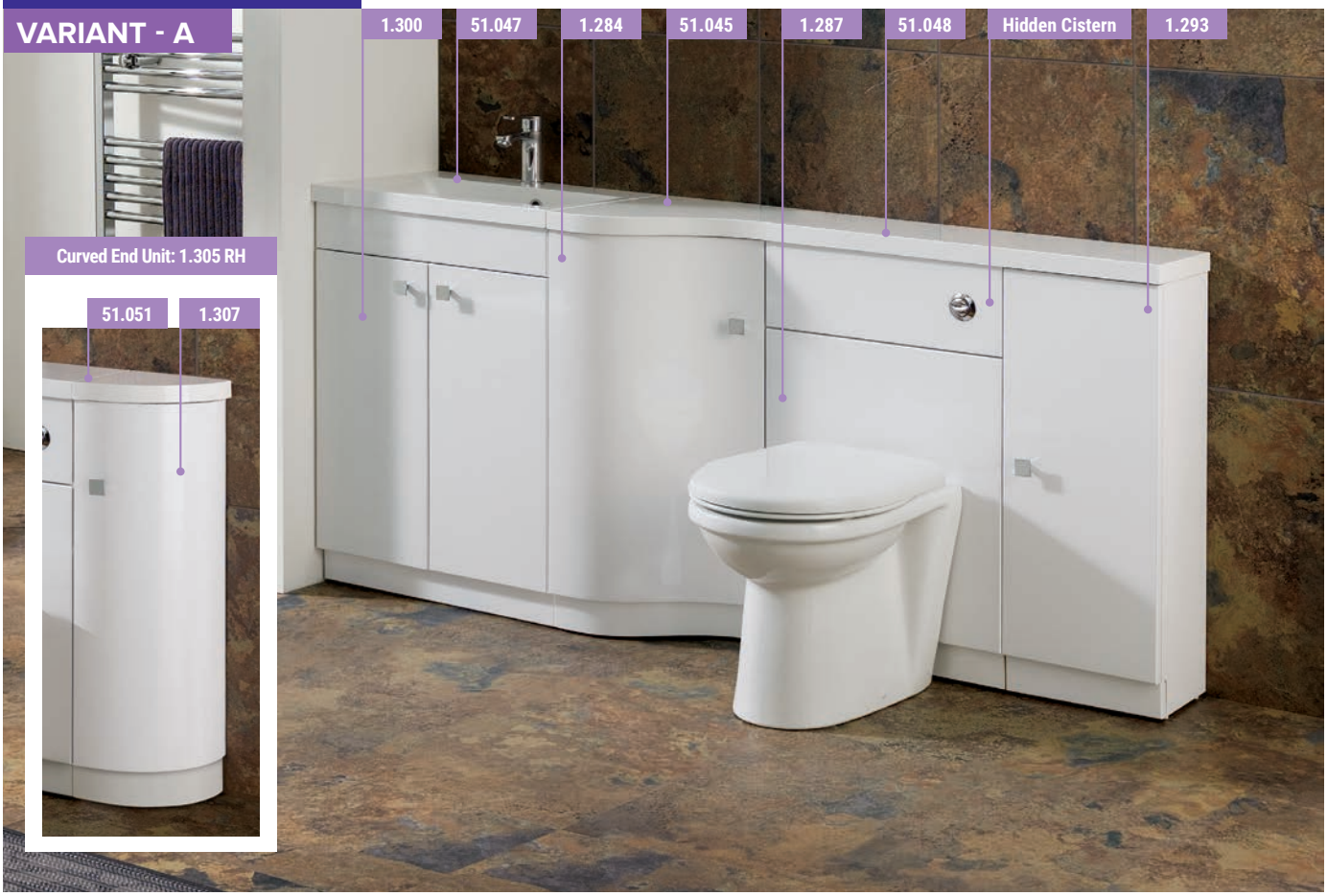

Curved End Unit: 1.305 RH

VARIANT - B



Curved End Unit: 1.305 RH

Oslo Combi Range

The Oslo Corner Combi collection is a clean, space efficient range that maximises storage. Choose from a selection of longer or shorter length set-ups to suit your taste and bathroom size.

Oslo Corner Combi

Description	Code	€ Ex VAT	€ Inc VAT
Oslo Combi 580 door base unit	1.300	439.00	**539.97**
Oslo 580 Combi basin top*	51.047	255.00	**313.65**

*Due to depth of the waste area, the trap for external overflow kit & a flip top basin waste (unslotted) are recommended for installation.

Oslo Cabinets

Description	Code	€ Ex VAT	€ Inc VAT
Oslo Corner base unit LH	1.284	598.00	**735.54**
Oslo Corner base unit RH	1.285	598.00	**735.54**
Oslo 30cm base cupboard, 1 door	1.293	237.00	**291.51**
Oslo curved end unit LH	1.306	399.00	**490.77**
Oslo curved end unit RH	1.307	399.00	**490.77**

Oslo WC Unit

Description	Code	€ Ex VAT	€ Inc VAT
Oslo WC unit only	1.287	457.00	**562.11**
Oslo WC unit plinth	1.288	26.00	**31.98**
Plain infill panel 30 x 81cm	1.042	124.00	**152.52**

For hidden cisterns see pages 194-195.

Plain Tops

Description	Code	€ Ex VAT	€ Inc VAT
Oslo Curved Long top Plain LH	51.043	216.00	**265.68**
Oslo Curved Long top Plain RH	51.044	216.00	**265.68**
Oslo Curved Single top Plain LH	51.045	154.00	**189.42**
Oslo Curved Single top Plain RH	51.046	154.00	**189.42**
Oslo Slab top 794	51.048	374.00	**460.02**
Oslo single quad top	51.051	129.00	**158.67**

Extras

Description	Code	€ Ex VAT	€ Inc VAT
Trap for external overflow kit	7.0015	34.00	**41.82**
Flip Top Basin Waste - Unslotted	25.0005	27.00	**33.21**

FEATURES
- Soft close system on doors and drawers

FEATURES - CAST MARBLE TOPS
- Made of 75% natural marble stone
- Repairable if chipped
- Seamless surface, easy to maintain



51.051

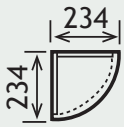

51.045

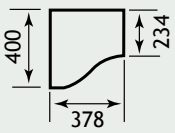

1.075
1.287
1.288

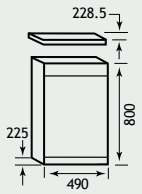

51.046

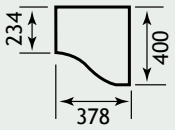

51.047

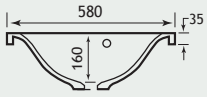

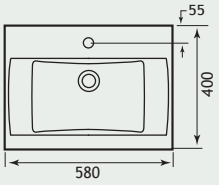

1.284/51.045

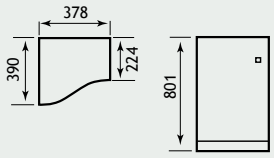

1.285/51.046

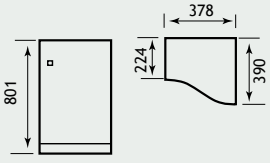

1.300

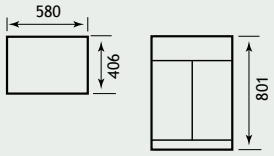

1.293

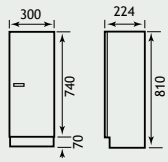

51.048

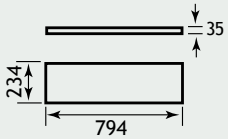

51.043/51.044 LH Shown

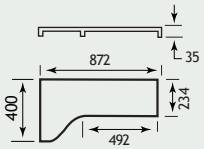

1.306/51.049/51.051

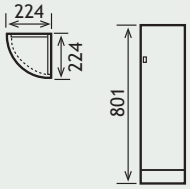

1.307/51.044/51.051

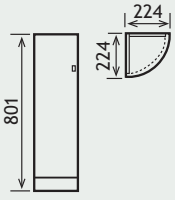

Oslo Combi Range

OSLO CORNER COMBI

VARIANT - D

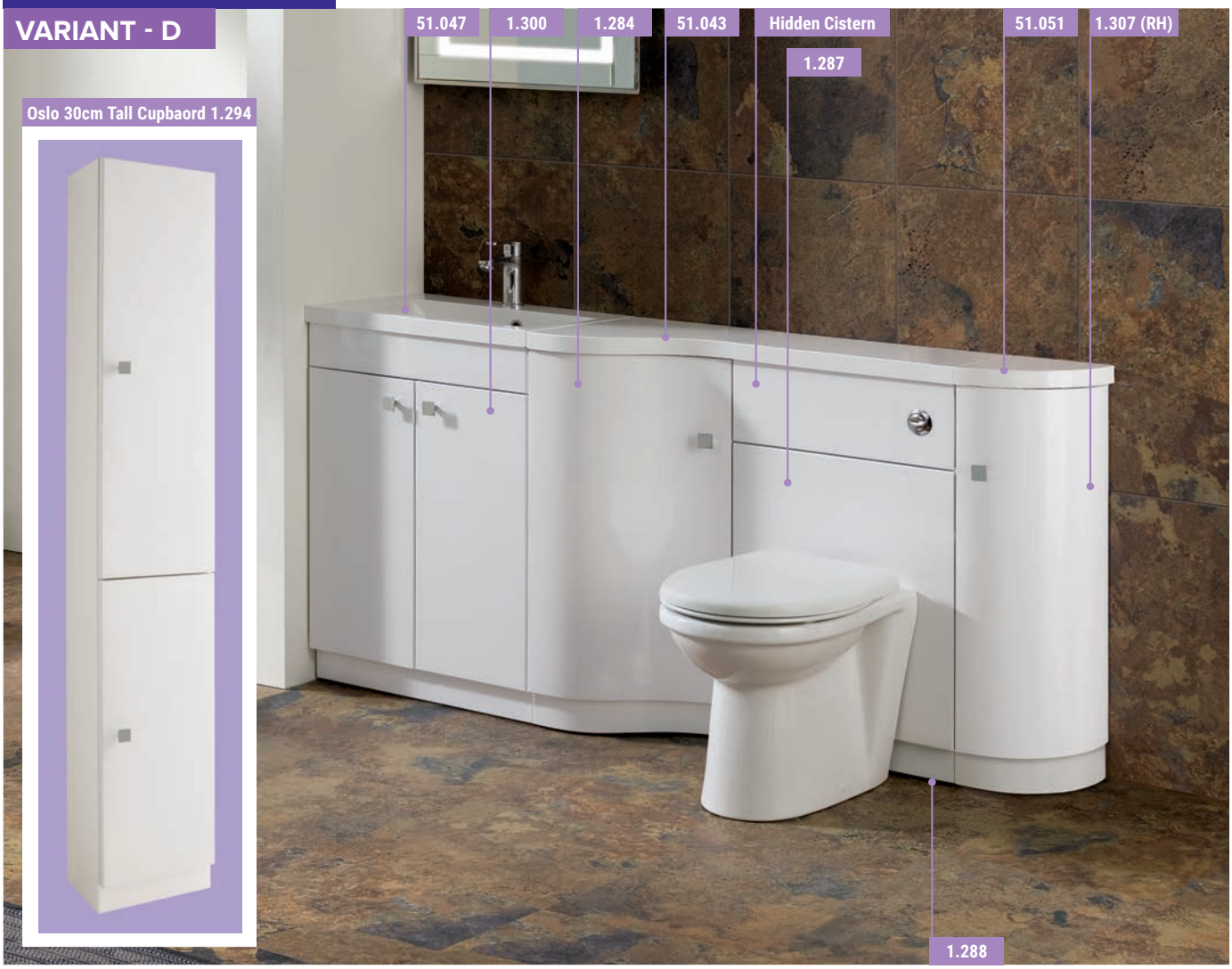

VARIANT - E



VARIANT - F



Oslo Combi Range

The Oslo Corner Combi collection is a clean, space efficient range that maximises storage. Choose from a selection of longer or shorter length set-ups to suit your taste and bathroom size.

Oslo Corner Combi

Description	Code	€ Ex VAT	€ Inc VAT
Oslo Corner base unit LH	1.284	598.00	**735.54**
Oslo Corner base unit RH	1.285	598.00	**735.54**
Oslo Corner Combi single basin LH *	51.016	269.00	**330.87**
Oslo Corner Combi single basin RH *	51.017	269.00	**330.87**
Oslo Corner Combi long basin LH *	51.014	346.00	**425.58**
Oslo Corner Combi long basin RH *	51.015	346.00	**425.58**

*Due to depth of the waste area, the trap for external overflow kit & a flip top basin waste (unslotted) are recommended for installation.

Oslo Cabinets

Description	Code	€ Ex VAT	€ Inc VAT
Oslo Curved Long top Plain LH	51.043	216.00	**265.68**
Oslo Curved Long top Plain RH	51.044	216.00	**265.68**
Oslo 30cm base cupboard, 1 door	1.293	237.00	**291.51**
Oslo 30cm tall cupboard, 2 door	1.294	566.00	**696.18**
Oslo curved end unit LH	1.306	399.00	**490.77**
Oslo curved end unit RH	1.307	399.00	**490.77**
Oslo Combi 580 door base unit	1.300	439.00	**539.97**

Oslo WC Unit

Description	Code	€ Ex VAT	€ Inc VAT
Oslo WC unit only†	1.287	457.00	**562.11**
Oslo WC unit plinth	1.288	26.00	**31.98**
Plain infill panel 30 x 81cm	1.042	124.00	**152.52**

Oslo WC unit spares

Description	Code	€ Ex VAT	€ Inc VAT
Upper panel for 1.287 Oslo WC unit	1.99070	87.00	**104.40**
Lower panel Oslo 50cm tall cistern unit	1.99046	78.00	**93.60**

Plain Tops

Description	Code	€ Ex VAT	€ Inc VAT
Oslo curved end top LH	51.049	269.00	**322.80**
Oslo curved end top RH	51.050	269.00	**322.80**
Oslo single quad top	51.051	129.00	**158.67**
Oslo 580 Combi basin top	51.047	255.00	**313.65**
Oslo Slab top 794	51.048	374.00	**460.02**
MDF WC Diamante 50cm top†	1.075	89.00	**109.47**
Oslo curved end unit LH	1.306	399.00	**490.77**
Oslo curved end unit RH	1.307	399.00	**490.77**

†Required 1.075 top and 1.288 plinth. *Due to depth of the waste area, the trap for external overflow kit & a flip top basin waste (unslotted) are recommended for installation.

Extras

Description	Code	€ Ex VAT	€ Inc VAT
Trap for external overflow kit	7.0015	34.00	**41.82**
Flip Top Basin Waste - Unslotted	25.0005	27.00	**33.21**

1.288
1.287

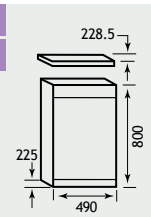

1.294

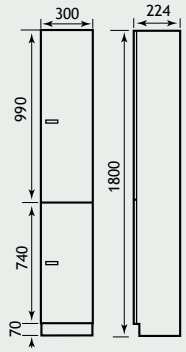

1.293

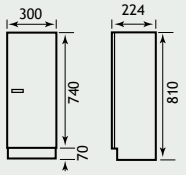

51.016

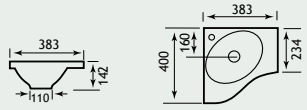

51.017

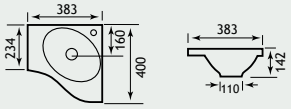

1.284/51.045

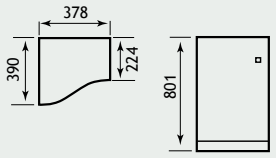

1.285/51.046

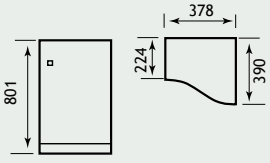

51.049 (left hand shown)

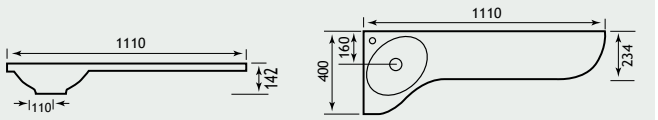

51.014 (left hand shown)

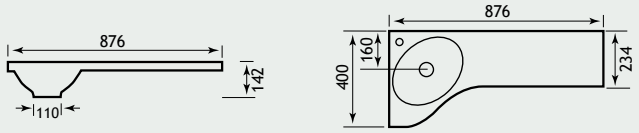

1.306/51.051

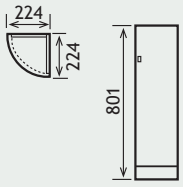

1.307/51.051

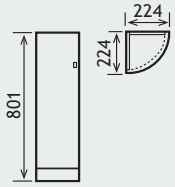

51.015 (right hand shown)

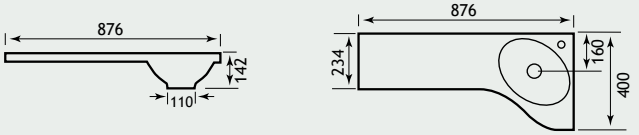

Oslo Semi Recessed Range

OSLO SEMI RECESSED



Oslo Semi Recessed

Description	Code	€ Ex VAT	€ Inc VAT
Oslo 60cm WC unit	1.052	457.00	**562.11**
Oslo 60cm basin unit	1.053	413.00	**507.99**
Oslo 30cm base drawer unit LH	1.054	251.00	**308.73**
Oslo 60cm base cupboard with drawer	1.055	425.00	**522.75**
Oslo 30cm base drawer unit RH	1.056	251.00	**308.73**

Tops

Description	Code	€ Ex VAT	€ Inc VAT
Laminate Tops Gloss 1000 x 310 mm	28.006	103.00	**126.69**
Laminate Tops Gloss 1200 x 310mm	28.009	118.00	**145.14**
Laminate Tops Gloss 1500 x 310 mm	28.007	118.00	**145.14**
Laminate Tops Gloss 2000 x 310 mm	28.008	199.00	**244.77**

Bonito Plinths

Description	Code	€ Ex VAT	€ Inc VAT
30cm Plinth (height 70mm)	1.011	28.00	**34.44**
60cm plinth (height 70mm)	1.813	24.00	**29.52**
90cm plinth (height 70mm)	1.038	34.00	**41.82**
120cm plinth (height 70mm)	1.039	35.00	**43.05**
150cm plinth (height 70mm)	1.040	41.00	**50.43**
180cm plinth (height 70mm)	1.041	44.00	**54.12**

Basin Unit

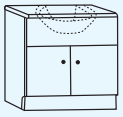

The upper panel is supplied uncut (for semi recessed basin)

1.053 Basin Unit

Width	Depth	Height
600mm	305mm	800mm

*Height excluding countertop and basin

Cupboard & Draw Unit

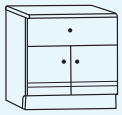

The upper panel is supplied uncut (for semi recessed basin)

1.055 Cupboard Draw Unit

Width	Depth	Height
600mm	305mm	800mm

*Height excluding countertop and basin

Base Unit with Drawer

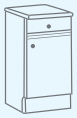

All drawers have metal runners and all doors have metal adjustable hinges. RH shown

1.054 (LH) / 1.056 (RH)

Width	Depth	Height
300mm	305mm	800mm

*excluding countertop

Concealed Cistern WC unit

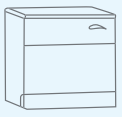

with two removable fascia panels. The panels are not pre-drilled or cut (for greater flexibility when fitting)

1.052

Width	Depth	Height
600mm	305mm	800mm

*Height excluding countertop and basin

Oslo Semi Recessed Slimline Range

OSLO SEMI RECESSED SLIMLINE



Oslo Semi Recessed Slimline

Description	Code	€ Ex VAT	€ Inc VAT
Oslo slimline basin unit *	1.051	413.00	**507.99**
Oslo WC unit only *	1.287	457.00	**562.11**
Laminate Tops Gloss 1200 x 310mm	28.009	118.00	**145.14**
Kompact reduced depth semi recessed basin 1TH LH	27.0361	168.00	**206.64**
Kompact reduced depth semi recessed basin 2TH	27.9361	168.00	**206.64**
*No plinth supplied			

Oslo Slimline Plinths

Description	Code	€ Ex VAT	€ Inc VAT
Oslo WC unit 500mm plinth	1.288	26.00	**31.98**
Diamante 1090mm plinth	1.077	35.00	**43.05**
Oslo slimline 600mm basin unit plinth	1.813	24.00	**18.00**

Extras

Description	Code	€ Ex VAT	€ Inc VAT
Kompact reduced depth semi recessed basin 1TH LH	27.0361	168.00	**206.64**
Kompact BTW pan	27.0321	238.00	**292.74**
Kompact soft close seat	21.1151	212.00	**260.76**
Fabriano 700 x 500mm LED landscape mirror	40.1004	485.00	**596.55**

FEATURES

- Soft close system on doors and drawers

Slimline Basin Unit

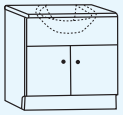

The upper panel is supplied uncut (for semi recessed basin)

1.051

Width	Depth	Height
600mm	255mm	800mm

Height excluding countertop and basin

Oslo Tall Cistern

OSLO TALL CISTERN UNIT - WHITE



A Comfort Height cistern unit to complement the Dura Comfort Height BTW pan. Available as a stand alone unit or with the option of two different size cupboards.

Oslo Tall Cistern Unit

Description	Code	€ Ex VAT	€ Inc VAT
Oslo tall cistern unit	1.278	548.00	**674.04**
Oslo tall cistern unit top	1.279	86.00	**105.78**
Oslo tall unit cupboard 500 x 800 x 220mm	1.280	369.00	**453.87**
Oslo tall unit cupboard 500 x 1000 x 220mm	1.281	422.00	**519.06**
Dura Comfort Height BTW Pan	26.0047	273.00	**335.79**
Dura Deluxe Soft Close Seat	26.0015	103.00	**126.69**
Oslo 58cm door base unit	1.068	461.00	**567.03**
Oslo 58cm cast top	51.007	296.00	**364.08**
Vantage Plain Hidden Cistern CP Push Button	17.001	252.00	**309.96**
Eastbrook Jacket Hidden Cistern - Bottom Inlet	53.001	157.00	**193.11**
Vantage Hidden Cistern with Jacket	17.3029	290.00	**356.70**
Oslo 30cm tall cupboard, 2 door	1.294	566.00	**696.18**

For hidden cisterns see pages 194-195

Oslo Tall Cistern Unit Spares

Description	Code	€ Ex VAT	€ Inc VAT
Lower panel Oslo 50cm tall cistern unit	1.99046	78.00	**93.60**
Upper panel Oslo 50cm tall cistern unit	1.99047	46.00	**55.20**

FEATURES
- Soft close system on doors

FEATURES - CAST MARBLE TOPS
- Made of 75% natural marble stone
- Repairable if chipped
- Seamless surface, easy to maintain



1.294



1.281

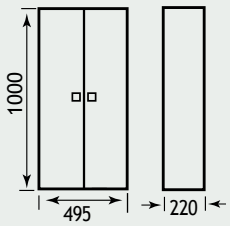

For wall mirrors and cabinets see pages 326-351

26.0047

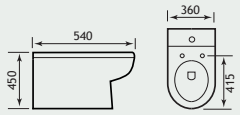

Dura Comfort Height BTW pan

1.294

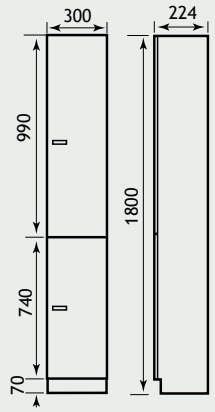

30cm Tall wall cupboard

1.278 & 1.280

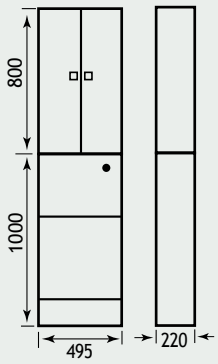

1.280

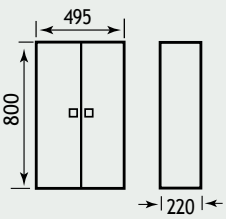

1.278 & 1.279

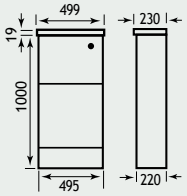

Oslo Tall Cistern

OSLO TALL CISTERN UNIT - MATT ANTHRACITE



A Comfort Height cistern unit that adapts your bathroom storage needs into a spacesaving solution. Available as a stand alone unit or with the option of two different size cupboards.

Alternative basins see page 283

Oslo Tall Cistern Unit - Matt Anthracite

Description	Code	€ Ex VAT	€ Inc VAT
Oslo tall cistern unit Matt Anthracite	1.762	548.00	**674.04**
Oslo tall cistern unit top Matt Anthracite	1.763	86.00	**105.78**
Oslo tall unit cupboard 500 x 800 Matt Anthracite	1.764	369.00	**453.87**
Oslo tall unit cupboard 500x1000 Matt Anthracite	1.765	422.00	**519.06**
Oslo 30cm tall cupboard Matt Anthracite	1.766	566.00	**696.18**
Oslo 58cm Matt Anthracite door base unit	1.757	461.00	**567.03**
Oslo 58 cast top *	51.007	296.00	**364.08**
Farringdon BTW pan	26.0058	297.00	**365.31**
Northall / Farringdon Wrap Over Soft Close Seat	26.0056	104.00	**127.92**
Vantage Plain Hidden Cistern CP Push Button	17.001	252.00	**309.96**
Eastbrook Jacket Hidden Cistern - Bottom Inlet	53.001	157.00	**193.11**
Vantage Hidden Cistern with Jacket	17.3029	290.00	**356.70**

*Due to depth of waste area, trap for external overflow kit & flip top basin waste are recommended for installation.

Extras

Description	Code	€ Ex VAT	€ Inc VAT
Trap for external overflow kit	7.0015	34.00	**41.82**
Flip Top Basin Waste - Unslotted	25.0005	27.00	**33.21**
Esk 600 x 700mm LED mirror	56.1079	388.00	**477.24**

1.765

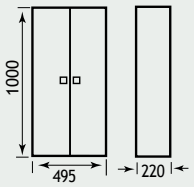

1.764

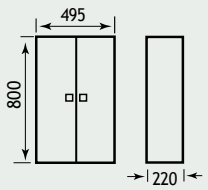

1.763 & 1.764

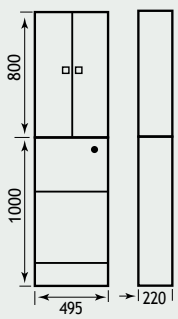

1.766

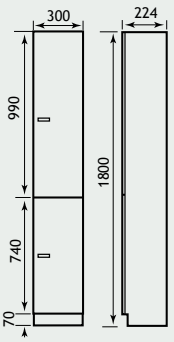

26.0058

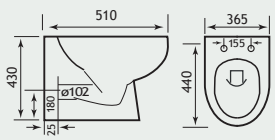

1.762
1.763

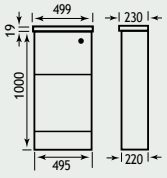

Oslo Tall Cistern

OSLO TALL CISTERN UNIT - DARK WALNUT



A Comfort Height cistern unit to complement the Dura Comfort Height BTW pan. Available as a stand alone unit or with the option of two different size cupboards.

Oslo Tall Cistern Unit - Dark Walnut

Description	Code	€ Ex VAT	€ Inc VAT
Oslo Tall Cistern Unit	59.0004	408.00	**501.84**
Oslo Tall Cistern Unit top	59.0005	76.00	**93.48**
Oslo tall unit cupboard 500 x 800 x 200mm †	59.0006	353.00	**434.19**
Oslo tall unit cupboard 500 x 1000 x 200mm †	59.0007	398.00	**489.54**
Dura Comfort Height BTW Pan	26.0047	273.00	**335.79**
Dura Deluxe Soft Close Seat	26.0015	103.00	**126.69**
Vantage Plain Hidden Cistern CP Push Button	17.001	252.00	**309.96**
Eastbrook Jacket Hidden Cistern - Bottom Inlet	53.001	157.00	**193.11**
Vantage Hidden Cistern with Jacket	17.3029	290.00	**356.70**

†Can be wall mounted as a stand alone unit.

Oslo 58 Unit - Dark Walnut

Description	Code	€ Ex VAT	€ Inc VAT
Oslo 58cm door base unit	59.0002	516.00	**634.68**
Oslo 58 cast top *	51.007	296.00	**364.08**

*Due to depth of the waste area, the trap for external overflow kit & a flip top basin waste (unslotted) are recommended for installation.

Extras

Description	Code	€ Ex VAT	€ Inc VAT
Trap for external overflow kit	7.0015	34.00	**41.82**
Flip Top Basin Waste - Unslotted	25.0005	27.00	**33.21**

See page 283 for alternative matching basins.
For hidden cisterns see pages 201-203.

FEATURES
- Soft close system on doors

FEATURES - CAST MARBLE TOPS
- Made of 75% natural marble stone
- Repairable if chipped
- Seamless surface, easy to maintain



FEATURES
- Soft close system on doors
- Separate shaver socket
- Cornice has LED spotlights

FEATURES - CAST MARBLE TOPS
- Made of 75% natural marble stone
- Repairable if chipped
- Seamless surface, easy to maintain

59.0004 & 59.0006

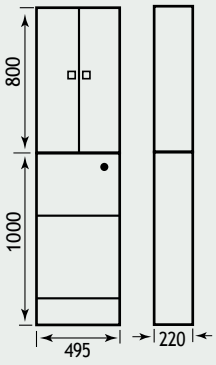

59.0006

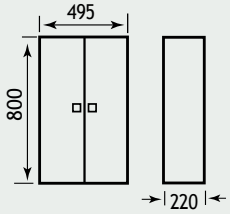

59.0007

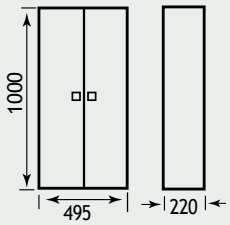

59.0002 & 51.007

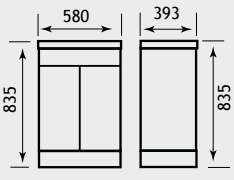

59.0004 & 59.0005

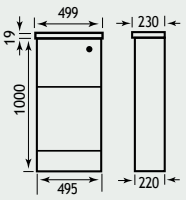

26.0047

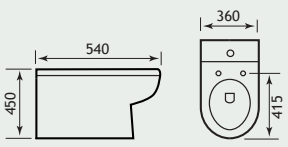

Oslo Reduced Depth

OSLO REDUCED DEPTH CISTERN UNIT





See pages 201-203 for more information, dimensions and stylish flush plates.

A new Comfort Height cistern to complement the Collindale Comfort Height BTW pan. Available as a stand alone unit or with the option of two different size cupboards.

Oslo 58 Base and Top

Description	Code	€ Ex VAT	€ Inc VAT
Oslo 58cm door base unit	1.068	461.00	**567.03**
Oslo 58 cast top *	51.007	296.00	**364.08**
Sorrento 45cm LED cornice	1.520	276.00	**339.48**
Sorrento 40cm mirror †	1.418	177.00	**217.71**

*Due to depth of the waste area, the trap for external overflow kit & a flip top basin waste (unslotted) are recommended for installation. †Mirror must be fitted with a cornice.

Oslo Wide Cistern Unit

Description	Code	€ Ex VAT	€ Inc VAT
Oslo wide cistern unit	1.289	548.00	**674.04**
Oslo wide cistern unit top	1.290	86.00	**105.78**
Oslo wide wall cupboard 690x165x500	1.291	369.00	**453.87**
Oslo wide wall cupboard 690x165x700	1.292	422.00	**519.06**
Collindale Rimless Comfort Height BTW Pan	26.0068	355.00	**436.65**
Bijou / Collindale Soft Close Seat	26.0070	115.00	**141.45**

Oslo Wide Cistern Unit Spares

Description	Code	€ Ex VAT	€ Inc VAT
Lower panel Oslo wide cistern unit	1.99060	103.00	**123.60**
Upper panel Oslo wide cistern unit	1.99061	98.00	**117.60**

Extras

Description	Code	€ Ex VAT	€ Inc VAT
Trap for external overflow kit	7.0015	34.00	**41.82**
Flip Top Basin Waste - Unslotted	25.0005	27.00	**33.21**

FEATURES
- Soft close system on doors
- Separate shaver socket
- Cornice has LED spotlights

FEATURES - CAST MARBLE TOPS
- Made of 75% natural marble stone
- Repairable if chipped
- Seamless surface, easy to maintain

1.068 & 51.007

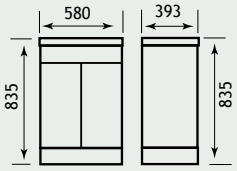

1.290 & 1.289

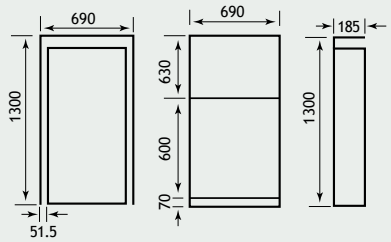

Oslo Wall Hung

OSLO 39 WALL HUNG UNITS



Pictured - 390 Double Height Wall Hung Unit

NORTHALL RIMLESS PAN Complete the LOOK
PAGE 184-185

Oslo 39 Wall Hung Units

Description	Code	€ Ex VAT	€ Inc VAT
Oslo 390 Shallow Height Wall Hung Unit	29.0138	131.00	**161.13**
Oslo 390 Double Height Wall Hung Door Unit	29.0148	237.00	**291.51**
Oslo/Faro 39 cast top*	51.005	231.00	**284.13**
Oslo 1400 x 300 x 259 Two Door Wall Unit †	29.0178	471.00	**579.33**

*Due to depth of the waste area, the trap for external overflow kit & a flip top basin waste (unslotted) are recommended for installation. †Doors can be rehanded on installation.

Extras

Description	Code	€ Ex VAT	€ Inc VAT
Trap for external overflow kit	7.0015	34.00	**41.82**
Flip Top Basin Waste - Unslotted	25.0005	27.00	**33.21**

FEATURES
- Soft close system on doors

FEATURES - CAST MARBLE TOPS
- Made of 75% natural marble stone
- Repairable if chipped
- Seamless surface, easy to maintain

29.0178

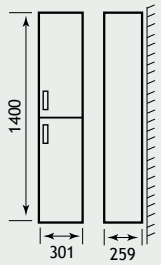

29.0148

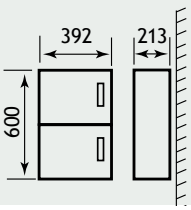

29.0148



51.005

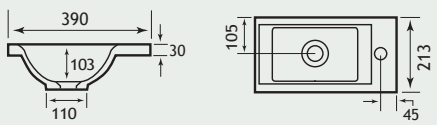

29.0138

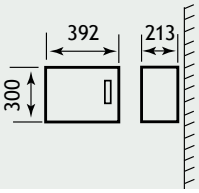

Oslo Wall Hung

OSLO 44 WALL HUNG UNITS



NORTHALL RIMLESS PAN Complete the LOOK
PAGE 184-185

Oslo 44 Wall Hung Units

Description	Code	€ Ex VAT	€ Inc VAT
Oslo 440 Two Drawer Wall Hung Unit	29.0158	436.00	**536.28**
Oslo 44 cast top*	51.006	269.00	**330.87**
Oslo 1400 x 300 x 259 Two Door Wall Unit†	29.0178	471.00	**579.33**

*Due to depth of the waste area, the trap for external overflow kit & a flip top basin waste (unslotted) are recommended for installation. †Doors can be rehanded on installation.

Extras

Description	Code	€ Ex VAT	€ Inc VAT
Trap for external overflow kit	7.0015	34.00	**41.82**
Flip Top Basin Waste - Unslotted	25.0005	27.00	**33.21**

FEATURES
- Soft close system drawers

FEATURES - CAST MARBLE TOPS
- Made of 75% natural marble stone
- Repairable if chipped
- Seamless surface, easy to maintain



51.006

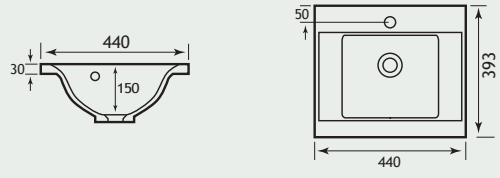

29.0158

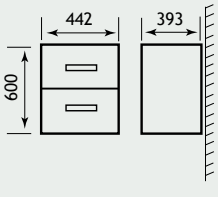

29.0178

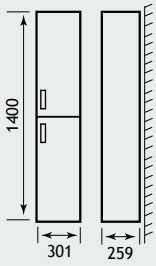

Oslo Wall Hung

OSLO 58 WALL HUNG UNITS



Oslo 58 Wall Hung Units

Description	Code	€ Ex VAT	€ Inc VAT
Oslo 580 Two Drawer Wall Hung Unit	29.0168	455.00	**559.65**
Oslo 58 cast top*	51.007	296.00	**364.08**
Oslo 1400 x 300 x 259 Two Door Wall Unit†	29.0178	471.00	**579.33**

*Due to depth of the waste area, the trap for external overflow kit & a flip top basin waste (unslotted) are recommended for installation. †Doors can be rehanded on installation.

Extras

Description	Code	€ Ex VAT	€ Inc VAT
Trap for external overflow kit	7.0015	34.00	**41.82**
Flip Top Basin Waste - Unslotted	25.0005	27.00	**33.21**

FEATURES
- Soft close system on doors and drawers

FEATURES - CAST MARBLE TOPS
- Made of 75% natural marble stone
- Repairable if chipped
- Seamless surface, easy to maintain



29.0168

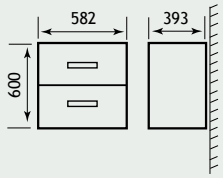

29.0178

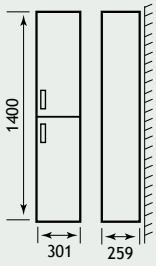

Seville

SEVILLE TABLEAU - WHITE GLOSS



Pictured 1.324

A contemporary take on the bathroom unit, this minimalist shelf will transform your bathroom. Supplied with wall brackets.

Seville Vanity Tableau in White Gloss

Description	Code	€ Ex VAT	€ Inc VAT
Seville 500mm vanity tableau inc wall bracket	1.321	518.00	**637.14**
Seville 600mm vanity tableau inc wall brackets	1.322	576.00	**708.48**
Seville 800mm vanity tableau inc wall bracket	1.323	684.00	**841.32**
Seville 1000mm vanity tableau inc wall bracket	1.324	796.00	**979.08**
Rondo sit on basin 412mm	51.032	283.00	**348.09**

Optional Towel Rails See Picture Above

Description	Code	€ Ex VAT	€ Inc VAT
Single Towel Rail 450mm Chrome	52.117	80.00	**98.40**
Single Towel Rail 550mm Chrome	52.118	82.00	**100.86**
Single Towel Rail 750mm Chrome	52.119	87.00	**107.01**
Single Towel Rail 950mm Chrome	52.120	93.00	**114.39**

FEATURES
- Hidden wall brackets
- Two colour options available



Pictured 1.321



Pictured 1.322



Pictured 1.323

1.321

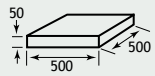

1.322

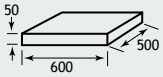

1.323

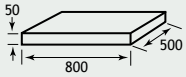

1.324

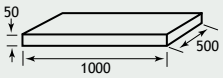

Seville

SEVILLE TABLEAU - WASHED ASH



Seville Tableau
1000 Washed Ash

Seville Vanity Tableau In Washed Ash			
Description	**Code**	**€ Ex VAT**	**€ Inc VAT**
Seville 500 vanity tableau inc wall bracket†	1.313	471.00	**579.33**
Seville 1000 vanity tableau inc wall bracket†	1.320	584.00	**718.32**
Rondo sit on basin 412	51.032	283.00	**348.09**
†While stocks last			

Optional Towel Rails			
Description	**Code**	**€ Ex VAT**	**€ Inc VAT**
Single towel rail 450mm Chrome	52.117	80.00	**98.40**
Single Towel Rail 550mm Chrome	52.118	82.00	**100.86**
Single Towel Rail 750mm Chrome	52.119	87.00	**107.01**
Single Towel Rail 950mm Chrome	52.120	93.00	**114.39**



Pictured - 1.313

1.315

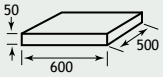

1.312
1.320

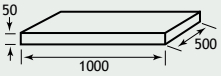

Sorrento Slab

SORRENTO SLAB 45



Sorrento Slab 45 White Gloss with Rondo sit on basin (see page 184)

A modern design of a traditional concept with soft close hinges, adjustable feet and solid ceramic top which accommodates a variety of sit-on basins.

Sorrento Slab 45

Description	Code	€ Ex VAT	€ Inc VAT
Sorrento 41cm base unit *	1.510	500.00	**615.00**
Sorrento 45 Slab top	51.035	184.00	**226.32**
Rondo sit on basin 412	51.032	283.00	**348.09**
Prado 550 high rise mono basin	56.2002	184.00	**226.32**
Sorrento short legs - pack of 4	1.305	45.00	**55.35**

*1.305 shorter legs are advised when using slab top on floor mounted units to compensate for extra height of sit-on basin.

FEATURES
- Soft close system on doors
- Adjustable legs 50-70mm - short
- Adjustable legs 120-130mm - standard

FEATURES - SIT ON BASINS
- Made of 75% natural marble stone
- Repairable if chipped
- Seamless surface, easy to maintain

SORRENTO SLAB 60



Sorrento Slab 60 White Gloss, with Natura basin (see page 184)

A modern design of a traditional concept with soft close hinges, adjustable feet and solid ceramic top which accommodates a variety of sit-on basins.

Sorrento Slab 60

Description	Code	€ Ex VAT	€ Inc VAT
Sorrento/Faro 56cm base unit *	1.512	621.00	**763.83**
Sorrento 60 Slab top	51.036	227.00	**279.21**
Natura sit on basin 500x400	51.030	283.00	**348.09**
Prado 550 high rise mono basin	56.2002	184.00	**226.32**
Sorrento short legs - pack of 4	1.305	45.00	**55.35**

*1.305 shorter legs are advised when using slab top on floor mounted units to compensate for extra height of sit-on basin.

FEATURES
- Soft close system on doors and drawers
- Adjustable legs 50-70mm - short
- Adjustable legs 120-130mm - standard

FEATURES - SIT ON BASINS
- Made of 75% natural marble stone
- Repairable if chipped
- Seamless surface, easy to maintain

51.032

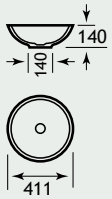

Rondo Basin

1.510

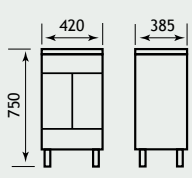

*Measurement with recommended shorter legs - 1.305

51.030

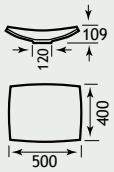

Natura Basin

1.512

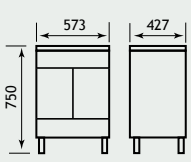

*Measurement with recommended shorter legs - 1.305

Sorrento Slab

SORRENTO SLAB 80



Sorrento Slab 80 White Gloss, with Rondo basin (see page 184).

A modern design of a traditional concept with soft close hinges, adjustable feet and a solid slab top which accommodates a variety of sit-on basins.

Sorrento Slab 80

Description	Code	€ Ex VAT	€ Inc VAT
Sorrento/Faro 76cm base unit *	1.514	700.00	**861.00**
Sorrento 80 Slab top	51.037	259.00	**318.57**
Rondo sit on basin 412	51.032	283.00	**348.09**
Renata sit on basin 430	51.029	255.00	**313.65**
Prado 550 high rise mono basin	56.2002	184.00	**226.32**
Sorrento short legs - pack of 4	1.305	45.00	**55.35**

*1.305 shorter legs are advised when using slab top on floor mounted units to compensate for extra height of sit-on basin.

For wall mirrors and cabinets see pages 326-351

FEATURES
- Soft close system on doors and drawers
- Adjustable legs 50-70mm - short
- Adjustable legs 120-130mm - standard

FEATURES - SIT ON BASINS
- Made of 75% natural marble stone
- Repairable if chipped
- Seamless surface, easy to maintain

1.514

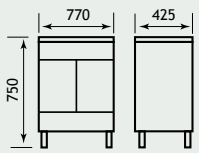

*Measurement with recommended shorter legs - 1.305



For other sit-on basins see page 192

51.032

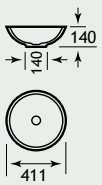

Rondo Basin

51.029

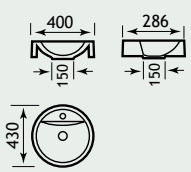

Renata Basin

Sorrento Slab

SORRENTO SLAB 100



Sorrento Slab 100 White Gloss, with Rondo basin (see page 192).

1.516

*Measurement with recommended shorter legs - 1.305

A modern design of a traditional concept with soft close hinges, adjustable feet and a solid slab top which accommodates a variety of sit-on basins.

Sorrento Slab 100

Description	Code	€ Ex VAT	€ Inc VAT
Sorrento/Faro 96cm base unit *	1.516	836.00	**1028.28**
Sorrento 100 Slab top	51.038	301.00	**370.23**
Rondo sit on basin 412	51.032	283.00	**348.09**
Natura sit on basin 500x400	51.030	283.00	**348.09**
Prado 550 high rise mono basin	56.2002	184.00	**226.32**
Sorrento short legs - pack of 4	1.305	45.00	**55.35**

*1.305 shorter legs are advised when using slab top on floor mounted units to compensate for extra height of sit-on basin.

For wall mirrors and cabinets see pages 326-351

FEATURES
- Soft close system on doors only
- Adjustable legs 50-70mm - short
- Adjustable legs 120-130mm - standard

FEATURES - SIT ON BASINS
- Made of 75% natural marble stone
- Repairable if chipped
- Seamless surface, easy to maintain



For other sit-on basins see page 192

51.032

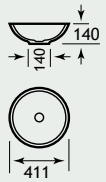

Rondo Basin

51.029

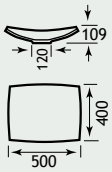

Natura Basin

Sorrento

SORRENTO 45 UNIT



Sorrento 45 base unit White Gloss. Also available as wall hung unit, see page 323.

A modern design of a traditional concept with soft close hinges, adjustable feet and solid ceramic top.

Sorrento 45 Unit

Description	Code	€ Ex VAT	€ Inc VAT
Sorrento 41cm base unit	1.510	500.00	**615.00**
Sorrento 40cm mirror *	1.418	177.00	**217.71**
Sorrento 45cm LED cornice	1.520	276.00	**339.48**
Sorrento 45cm Ceramic top	26.0088	152.00	**186.96**
Prado 500 Basin Mono (inc Waste)	79.0060	128.00	**157.44**

*Mirror must be fitted with a cornice.

For wall mirrors and cabinets see pages 326-351

FEATURES
- Soft close system on doors
- Separate shaver socket
- Chrome spotlights
- Adjustable legs on floor standing Units 120-130mm

SORRENTO 60 UNIT



Sorrento 60 base unit White Gloss. Also available as wall hung unit, see page 324.

A modern design of a traditional concept with soft close hinges, adjustable feet and solid ceramic top.

Sorrento 60 Unit

Description	Code	€ Ex VAT	€ Inc VAT
Sorrento/Faro 56cm base unit	1.512	621.00	**763.83**
Sorrento 40cm mirror *	1.418	177.00	**217.71**
Sorrento 60cm LED cornice	1.521	314.00	**386.22**
Sorrento 60cm Ceramic top	26.0089	194.00	**238.62**
Prado 500 Basin Mono (inc Waste)	79.0060	128.00	**157.44**

*Mirror must be fitted with a cornice.

For wall mirrors and cabinets see pages 326-351

FEATURES
- Soft close system on doors and drawer
- Separate shaver socket
- Chrome spotlights
- Adjustable legs on floor standing Units 120-130mm



All Sorrento cornices include separate shaver sockets and chrome spots.

26.0088

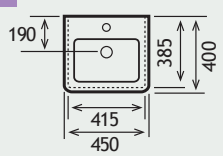

1.418/1.520

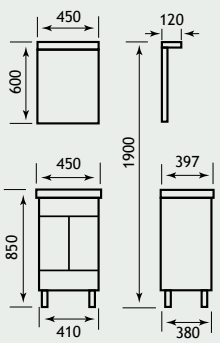

1.510

26.0089

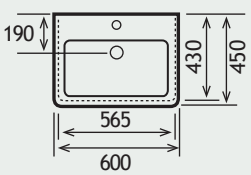

1.418/1.521

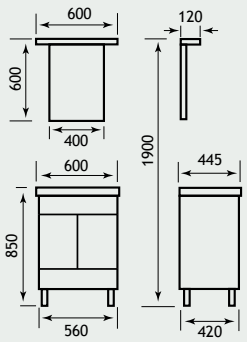

1.512

Sorrento



Sorrento 80 base unit White Gloss. Also available as wall hung unit, see page 313.

26.0090

SORRENTO 80 UNIT

A modern design of a traditional concept with soft close hinges, adjustable feet and solid ceramic top.

Sorrento 80 Unit

Description	Code	€ Ex VAT	€ Inc VAT
Sorrento/Faro 76cm base unit	1.514	700.00	**861.00**
Sorrento 80cm Ceramic Top	26.0090	250.00	**307.50**
Sorrento 70cm mirror *	1.419	238.00	**292.74**
Sorrento 80cm LED cornice	1.522	370.00	**455.10**
Sorrento 800mm 'Wave' action infra red LED cornice	1.219	471.00	**579.33**

*Mirror must be fitted with a cornice.

FEATURES

- Soft close system on doors and drawers
- Separate shaver socket
- Adjustable legs on floor standing Units 120-130mm



1.419

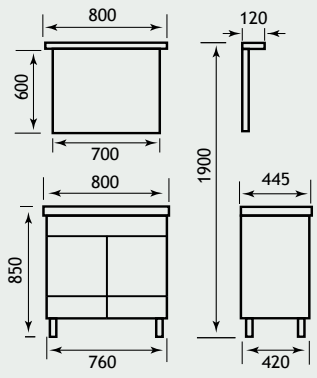

1.514

Sorrento

SORRENTO 100 UNIT



Sorrento 100 base unit White Gloss. Also available as wall hung unit, see page 314.

1.522

1.516

83.0020

The Sorrento range features adjustable legs. 120-130mm

A modern design of a traditional concept with soft close hinges, adjustable feet and solid ceramic tops.

Sorrento 100 Unit

Description	Code	€ Ex VAT	€ Inc VAT
Sorrento/Faro 96cm base unit	1.516	836.00	**1028.28**
Sorrento 100cm ceramic top	83.0020	269.00	**330.87**
Sorrento 70cm mirror *	1.419	238.00	**292.74**
Sorrento 80cm LED cornice	1.522	370.00	**455.10**
Sorrento 800mm 'Wave' action infra red LED cornice	1.219	471.00	**579.33**

*Mirror must be fitted with a cornice.

FEATURES

- Soft close system on doors
- Separate shaver socket
- Chrome spotlights
- Adjustable legs on floor standing Units 120-130mm

Sorrento Ceramic Tops

SORRENTO 45

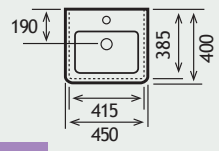

26.0088



450 x 397mm

Sorrento basins offer a flexible design option for numerous modern applications.

Sorrento 45

Description	Code	€ Ex VAT	€ Inc VAT
Sorrento 45cm Ceramic top	26.0088	152.00	**186.96**
Ceramic Top Basin Waste	45.0000	37.00	**45.51**

SORRENTO 60

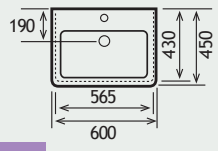

26.0089



600 x 445mm

Sorrento basins offer a flexible design option for numerous modern applications.

Sorrento 60

Description	Code	€ Ex VAT	€ Inc VAT
Sorrento 60cm Ceramic top	26.0089	194.00	**238.62**
Ceramic Top Basin Waste	45.0000	37.00	**45.51**

SORRENTO 80

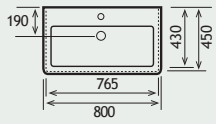

26.0090



450 x 397mm

Sorrento basins offer a flexible design option for numerous modern applications.

Sorrento 80

Description	Code	€ Ex VAT	€ Inc VAT
Sorrento 80cm Ceramic Top	26.0090	250.00	**307.50**
Ceramic Top Basin Waste	45.0000	37.00	**45.51**

SORRENTO 100 SINGLE BOWL

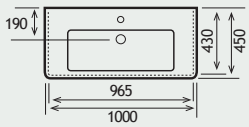

83.0020



600 x 445mm

Sorrento basins offer a flexible design option for numerous modern applications.

Sorrento 100 Single Bowl

Description	Code	€ Ex VAT	€ Inc VAT
Sorrento 100cm ceramic top	83.0020	269.00	**330.87**
Ceramic Top Basin Waste	45.0000	37.00	**45.51**

Sorrento Wall Hung

SORRENTO SLAB 45 UNIT



A modern design of a traditional concept with soft close hinges and solid ceramic top which accommodates a variety of sit-on basins.

Sorrento Slab 45 Wall-Hung Unit

Description	Code	€ Ex VAT	€ Inc VAT
Sorrento 41cm wall hung unit	1.710	497.00	**611.31**
Sorrento 45 Slab top	51.035	184.00	**226.32**
Rondo sit on basin 412	51.032	283.00	**348.09**
Prado 550 high rise mono basin	56.2002	184.00	**226.32**

FEATURES
- Soft close system drawer

FEATURES - SIT ON BASINS
- Made of 75% natural marble stone
- Repairable if chipped
- Seamless surface, easy to maintain

Renata sit-on basin 192
For other sit-on basins see page 192
For wall mirrors and cabinets see pages 326-351

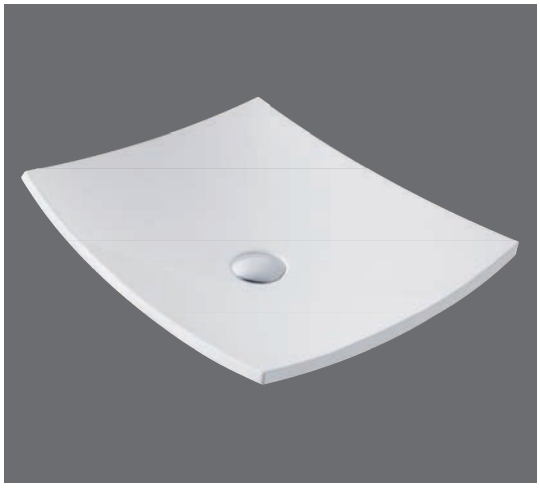

51.032 - Rondo

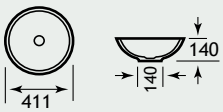

1.710

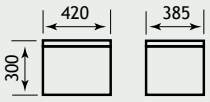

51.030 - Natura

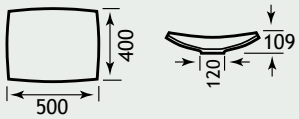

Sorrento Wall Hung

SORRENTO SLAB 60 UNIT



A modern design of a traditional concept with soft close hinges and a solid slab top which accommodates a variety of sit-on basins.

Sorrento Slab 60 Wall-Hung Unit

Description	Code	€ Ex VAT	€ Inc VAT
Sorrento 56cm wall hung unit	1.712	615.00	**756.45**
Sorrento 60 Slab top	51.036	227.00	**279.21**
Rondo sit on basin 412	51.032	283.00	**348.09**
Natura sit on basin 500x400	51.030	283.00	**348.09**
Prado 550 high rise mono basin	56.2002	184.00	**226.32**

FEATURES
- Soft close system on drawer

FEATURES - SIT ON BASINS
- Made of 75% natural marble stone
- Repairable if chipped
- Seamless surface, easy to maintain

For other sit-on basins see page 192

SORRENTO SLAB 80 UNIT



A modern design of a traditional concept with soft close hinges and a solid slab top which accommodates a variety of sit-on basins.

Sorrento Slab 80 Wall-Hung Unit

Description	Code	€ Ex VAT	€ Inc VAT
Sorrento 76cm wall hung unit	1.714	692.00	**851.16**
Sorrento 80 Slab top	51.037	259.00	**318.57**
Rondo sit on basin 412	51.032	283.00	**348.09**
Prado 550 high rise mono basin	56.2002	184.00	**226.32**

FEATURES
- Soft close system on drawers

FEATURES - SIT ON BASINS
- Made of 75% natural marble stone
- Repairable if chipped
- Seamless surface, easy to maintain

For other sit-on basins see page 192

1.712

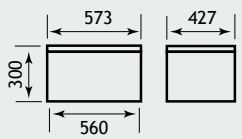

51.030 - Natura

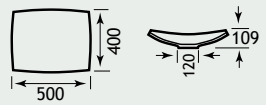

1.714

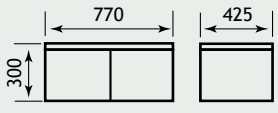

51.029 - Renata

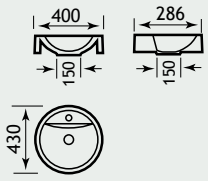

51.032 - Rondo

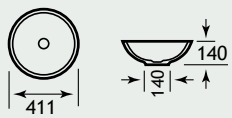

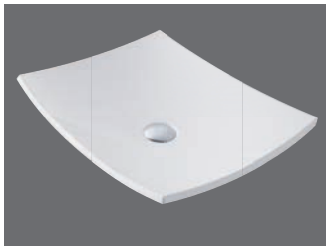



Sorrento Wall Hung

SORRENTO SLAB 100 UNIT



Sorrento Slab 100 Wall-Hung Unit

Description	Code	€ Ex VAT	€ Inc VAT
Sorrento 96cm wall hung unit	1.716	825.00	**1014.75**
Sorrento 100 Slab top	51.038	301.00	**370.23**
Rondo sit on basin 412	51.032	283.00	**348.09**
Prado 550 high rise mono basin	56.2002	184.00	**226.32**

FEATURES
- Adjustable legs on floor standing Units

FEATURES - SIT ON BASINS
- Made of 75% natural marble stone
- Repairable if chipped
- Seamless surface, easy to maintain

For wall mirrors and cabinets see pages 326-351

51.030 - Natura



For other sit-on basins see page 192

51.032 - Rondo

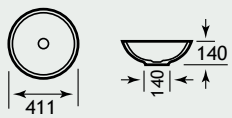

51.030 - Natura

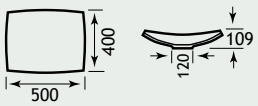

1.716

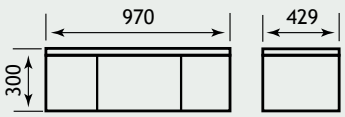

Sorrento Wall Hung



SORRENTO 45 WALL HUNG UNIT

A modern design of a traditional concept with soft close hinges and solid ceramic top.

FEATURES
- Soft close system on drawer
- Separate shaver socket





All Sorrento cornices include separate shaver sockets and chrome spots.

Sorrento 45 Wall-Hung Unit

Description	Code	€ Ex VAT	€ Inc VAT
Sorrento 41cm wall hung unit	1.710	497.00	**611.31**
Sorrento 40cm mirror *	1.418	177.00	**217.71**
Sorrento 45cm LED cornice	1.520	276.00	**339.48**
Sorrento 45cm Ceramic top	26.0088	152.00	**186.96**

*Mirror must be fitted with a cornice.

26.0088

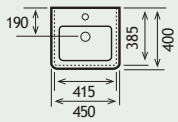

1.418/1.520

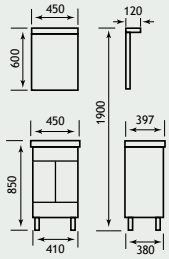

1.710

Sorrento Wall Hung

SORRENTO 60 WALL HUNG UNIT



A modern design of a traditional concept with soft close hinges and solid ceramic top.

FEATURES
- Soft close system on drawers

FEATURES - CORNICE
- Separate shaver socket





All Sorrento cornices include separate shaver sockets and chrome spots.

26.0089

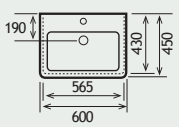

1.418/1.521

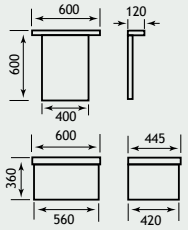

1.712

Sorrento 60 Wall-Hung

Description	Code	€ Ex VAT	€ Inc VAT
Sorrento 56cm wall hung unit	1.712	615.00	**756.45**
Sorrento 40cm mirror *	1.418	177.00	**217.71**
Sorrento 60cm LED cornice	1.521	314.00	**386.22**
Sorrento 60cm Ceramic top	26.0089	194.00	**238.62**

*Mirror must be fitted with a cornice.

Sorrento Wall Hung



SORRENTO 80 WALL HUNG UNIT

A modern design of a traditional concept with soft close hinges and solid ceramic top.

FEATURES
- Soft close system on drawers

FEATURES - CORNICE
- Separate shaver socket



26.0090

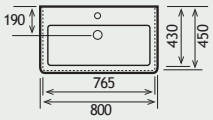

1.419/1.522

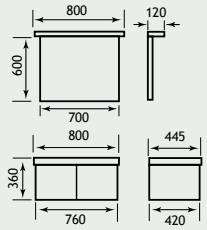

1.714

Sorrento 80 Wall-Hung			
Description	**Code**	**€ Ex VAT**	**€ Inc VAT**
Sorrento 76cm wall hung unit	1.714	692.00	**851.16**
Sorrento 70cm mirror *	1.419	238.00	**292.74**
Sorrento 80cm LED cornice	1.522	370.00	**455.10**
Sorrento 800mm 'Wave' action infra red LED cornice	1.219	471.00	**579.33**
Sorrento 80cm Ceramic Top	26.0090	250.00	**307.50**

*Mirror must be fitted with a cornice.

Sorrento Wall Hung

SORRENTO 100 WALL HUNG UNIT



Simply stunning. This superb 100 wall-hung unit can only be used with the single bowl ceramic top option.

Sorrento 100 Wall-Hung Unit

Description	Code	€ Ex VAT	€ Inc VAT
Sorrento 96cm wall hung unit	1.716	825.00	**1014.75**
Sorrento 100cm ceramic top	83.0020	269.00	**330.87**
Sorrento 70cm mirror *	1.419	238.00	**292.74**
Sorrento 80cm LED cornice	1.522	370.00	**455.10**
Sorrento 800mm 'Wave' action infra red LED cornice	1.219	471.00	**579.33**

*Mirror must be fitted with a cornice.

FEATURES
- Soft close system on drawers

FEATURES - CORNICE
- Separate shaver socket

83.0020

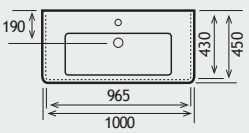

1.419/1.522/1.219

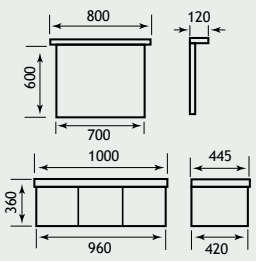

1.716

Sherwood

SHERWOOD CLASSIC VANITY UNITS

34.0118



Sherwood Classic vanity unit in White Gloss with Sorrento 600 ceramic top. Tap and basin extra.

34.0117



Sherwood Classic vanity unit in beech with inset basin. Tap extra, basin for illustration purposes only.

Sherwood Classic Vanity Units (All Flat Packed)

Description	Code	€ Ex VAT	€ Inc VAT
New classic 600 vanity unit - White Ash	34.0115	546.00	**671.58**
New classic 600 vanity unit - Beech	34.0117	546.00	**671.58**
New classic 600 vanity unit - White Gloss	34.0118	594.00	**730.62**

Price includes laminate top for inset basin use.
Ceramic top is available at extra cost - see below

FEATURES
- British manufactured
- FSC - All materials sourced from protected forests
- MDF

Tops & Basins To Fit

Description	Code	€ Ex VAT	€ Inc VAT
Sorrento 60cm Ceramic top	26.0089	194.00	**238.62**
Osanna inset basin 500x370	51.028	205.00	**252.15**
Natura sit on basin 500x400	51.030	283.00	**348.09**
Pricilla sit on basin 510x300	51.031	283.00	**348.09**
Rondo sit on basin 412	51.032	283.00	**348.09**
Pat inset basin basin 500x369	51.034	205.00	**252.15**

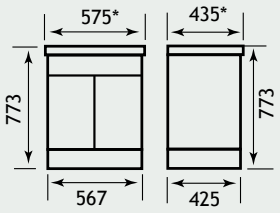

*Note: If ceramic top is used the top measurement is 600mm wide x 460mm deep x 830mm high

SHERWOOD ULTRA VANITY UNITS

Sherwood Ultra vanity unit in White Gloss with inset basin. Tap and basin extra.



Sherwood Ultra Vanity Units (All Flat Packed)

Description	Code	€ Ex VAT	€ Inc VAT
Ultra 600 vanity unit - Marine Oak†	34.01009†	546.00	**671.58**
Ultra 600 vanity unit - Drift Wood†	34.01008†	546.00	**671.58**

†While stocks last

Price includes laminate top for inset basin use.
Ceramic top is available at extra cost - see below.

FEATURES
- British manufactured
- FSC - All materials sourced from protected forests
- MDF

Tops & Basins To Fit

Description	Code	€ Ex VAT	€ Inc VAT
Sorrento 60cm Ceramic top	26.0089	194.00	**238.62**
Osanna inset basin 500x370	51.028	205.00	**252.15**
Natura sit on basin 500x400	51.030	283.00	**348.09**
Pricilla sit on basin 510x300	51.031	283.00	**348.09**
Rondo sit on basin 412	51.032	283.00	**348.09**
Pat inset basin basin 500x369	51.034	205.00	**252.15**

Bath Panels

SHERWOOD BATH PANELS

A comprehensive quality range of wood effect bath panels, seats and vanity units. The latest vinyl wrapped technology is used to produce an extremely tough panel with colour matching guaranteed throughout the co-ordinated products. Universal 18mm seats are available to complement, complete with a high quality bar hinge, or the new soft close hinges.

Sherwood is produced in four designs:

Sherwood Diamante Design

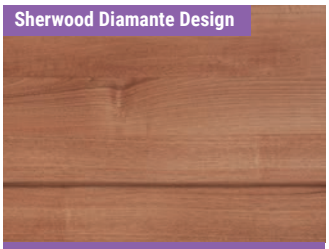

Sherwood Diamante - a simple and modern design

Sherwood Classic Design



Sherwood Classic for a more contemporary statement

Sherwood Original Design



Sherwood Original with a traditional twist

Sherwood Ultra Design

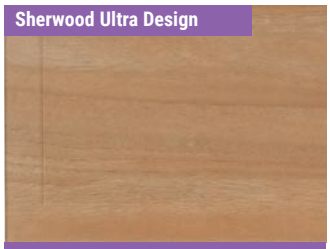

Sherwood Ultra - a real gem in design combining both the Original and Classic values

All items are vinyl-wrapped MDF. Refer to style pages for finish availability.

Colours subject to the limitations of the printing process. Colour sample available on request.

Natural Oak



White Ash



Marine Oak †While stocks last



Beech

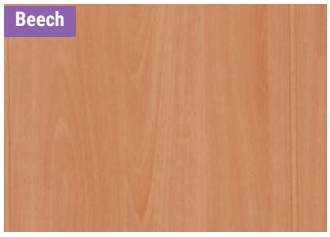

Light Walnut



White Gloss



Dark Walnut



SHERWOOD ORIGINAL BATH PANELS

Natural Oak

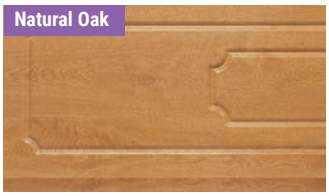

Antique Pine



White Ash



End panel

FEATURES

- British manufactured
- FSC - All materials sourced from protected forests
- MDF
- Fully adjustable plinth



Sherwood Original Front Bath Panels

Description	Colour	White Ash	€ Ex VAT	€ Inc VAT
Sherwood original 1500 front bath panel	White Ash	34.0035	170.00	**209.10**
Sherwood original 1600 front bath panel	White Ash	34.0095	170.00	**209.10**
Sherwood original 1700 front bath panel	Natural Oak	34.0043	170.00	**209.10**
Sherwood original 1700 front bath panel	White Ash	34.0045	170.00	**209.10**
Sherwood original 1800 front bath panel	Natural Oak	34.0053	184.00	**226.32**
Sherwood original 1800 front bath panel	White Ash	34.0055	184.00	**226.32**

Sherwood Original End Bath Panels

Description	Colour	White Ash	€ Ex VAT	€ Inc VAT
Sherwood original 800 end bath panel	Natural Oak	34.0083	124.00	**152.52**
Sherwood original 800 end bath panel	White Ash	34.0085	124.00	**152.52**

NB. All panels include extra deep plinth, allowing panel to be adjustable from 450mm to 575mm. The 800 mm universal end panel can be cut down to 700mm or 750mm size without loss of pattern.

Bath Panels

SHERWOOD DIAMANTE BATH PANELS

White Gloss



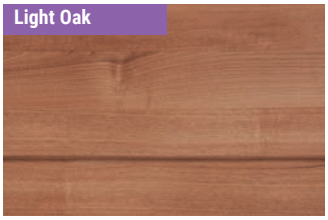



NB. 700/750 panels can be obtained by cutting down the 800 panels. All 2-piece adjustable from 450 to 575mm. Thickness 15mm. Plinth 150mm.

Colours subject to the limitations of the printing process.
Colour sample available on request.



Sherwood Diamante Front Bath Panels

Description	Colour	Code	€ Ex VAT	€ Inc VAT
Diamante 1700 front panel	High Gloss Black	34.07001	236.00	**290.28**
Diamante 1700 front panel	White Gloss	34.0701	236.00	**290.28**
Diamante 1700 front panel	Light Walnut	34.01604	170.00	**209.10**
Diamante 1700 front panel	Dark Walnut	34.01605	170.00	**209.10**
Diamante 1800 front panel	High Gloss Black	34.07101	258.00	**317.34**
Diamante 1800 front panel	White Gloss	34.0711	258.00	**317.34**
Diamante 1800 front panel	Light Walnut	34.01704	188.00	**231.24**
Diamante 1800 front panel	Dark Walnut	34.01705	188.00	**231.24**

Sherwood Diamante End Bath Panels

Description	Colour	Code	€ Ex VAT	€ Inc VAT
Diamante 800 end panel	High Gloss Black	34.07301	184.00	**226.32**
Diamante 800 end panel	White Gloss	34.0731	184.00	**226.32**
Diamante 800 end panel	Light Walnut	34.01904	122.00	**150.06**
Diamante 800 end panel	Dark Walnut	34.01905	122.00	**150.06**

SHERWOOD CLASSIC BATH PANELS

White Gloss



White Ash

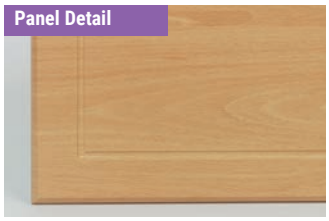

NB. All panels include extra deep plinth adjustable in height from 450mm to 575mm. The 800 universal end panel can be cut down to 700mm or 750mm size.

End Panel



Sherwood Classic Front Bath Panels

Description	Colour	Code	€ Ex VAT	€ Inc VAT
Sherwood classic 1700 front panel	White Ash	34.1045	170.00	**209.10**
Sherwood classic 1700 front panel	Beech	34.1047	170.00	**209.10**
Sherwood classic 1700 front panel	White Gloss	34.1048	222.00	**273.06**
Sherwood classic 1800 front panel	White Ash	34.1055	184.00	**226.32**
Sherwood classic 1800 front panel	Beech	34.1057	184.00	**226.32**
Sherwood classic 1800 front panel	White Gloss	34.1058	244.00	**300.12**

Sherwood Classic End Bath Panels

Description	Colour	Code	€ Ex VAT	€ Inc VAT
Sherwood classic 800 end panel	White Ash	34.1085	122.00	**150.06**
Sherwood classic 800 end panel	Beech	34.1087	122.00	**150.06**
Sherwood classic 800 end panel	White Gloss	34.1088	170.00	**209.10**

SHERWOOD ULTRA BATH PANELS

White Gloss

White Ash

Sherwood Ultra Front Bath Panels

Description	Colour	Code	€ Ex VAT	€ Inc VAT
Ultra 1700 Panel	White Ash	34.0065	170.00	**209.10**
Ultra 1700 Panel	White Gloss	34.0068	222.00	**273.06**
Ultra 1800 Panel	White Ash	34.0135	184.00	**226.32**
Ultra 1800 Panel	White Gloss	34.0138	244.00	**300.12**

Sherwood Ultra End Bath Panels

Description	Colour	Code	€ Ex VAT	€ Inc VAT
Ultra 800 Panel	White Ash	34.0075	122.00	**150.06**
Ultra 800 Panel	White Gloss	34.0078	170.00	**209.10**

Extra deep plinth allows panel to be adjustable in height from 5mm. Thickness 15mm. Plinth height 150mm.

FEATURES

- British manufactured
- FSC - All materials sourced from protected forests
- MDF
- Fully adjustable plinth

Bath Panels

DIAMANTE BATH PANELS

Diamante White Gloss

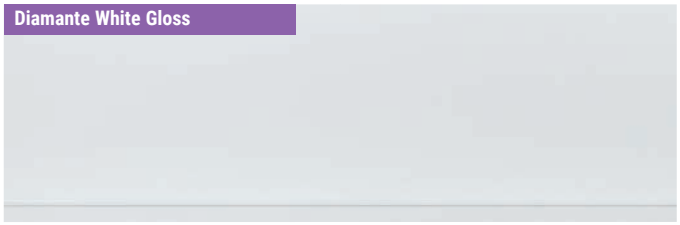

Diamante High Gloss Black



High gloss MDF panels to match Madrid, Bonito and Diamante

Diamante Bath Panels

Description	Colour	Code	€ Ex VAT	€ Inc VAT
Diamante 1700 front panel	White	34.0701	236.00	**290.28**
Diamante 1700 front panel	High Gloss Black	34.07001	236.00	**290.28**
Diamante 1800 front panel	White	34.0711	258.00	**317.34**
Diamante 1800 front panel	High Gloss Black	34.07101	258.00	**317.34**
Diamante 800 end panel	White	34.0731	184.00	**226.32**
Diamante 800 end panel	High Gloss Black	34.07301	184.00	**226.32**

NB. 700/750 panels can be obtained by cutting down the 800 panels.
All 2-piece adjustable from 450 to 575 mm. Thickness 15mm. Plinth 150mm.

FEATURES
- British manufactured
- FSC - All materials sourced from protected forests
- MDF
- Fully adjustable plinth

ACER PANELS

Dark Walnut



Natural Oak







Acer Panels

Description	Colour	Natural oak	€ Ex VAT	€ Inc VAT
Acer 1700 front panel	Dark Walnut	29.00605	237.00	**291.51**
Acer 1700 front panel	Natural Oak	29.0063	237.00	**291.51**
Acer 1800 front panel	Dark Walnut	29.00705	247.00	**303.81**
Acer 1800 front panel	Natural Oak	29.0073	247.00	**303.81**
Acer 700 end panel	Dark Walnut	29.00805	133.00	**163.59**
Acer 700 end panel	Natural Oak	29.0083	133.00	**163.59**
Acer 750 end panel	Dark Walnut	29.00905	139.00	**170.97**
Acer 750 end panel	Natural Oak	29.0093	139.00	**170.97**
Acer 800 end panel	Dark Walnut	29.01005	143.00	**175.89**
Acer 800 end panel	Natural Oak	29.0103	143.00	**175.89**

NB. 700/750 panels can be obtained by cutting down the 800 panels.
All 2-piece adjustable from 450 to 575 mm. Thickness 15mm. Plinth 150mm.

BONITO PANELS

Bonito

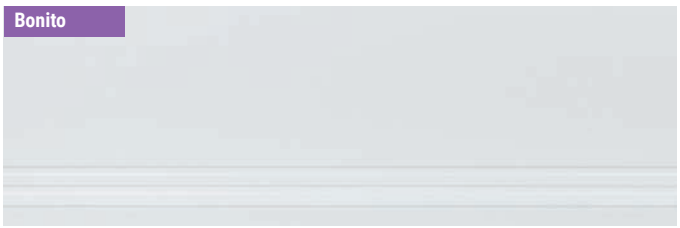

End panel

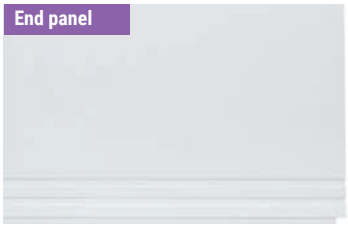

High gloss MDF panels to match Madrid, Bonito and Diamante

Bonito Panels

Description	Colour	Code	€ Ex VAT	€ Inc VAT
Bonito/Daisy 1700 front panel	Bonito/ Daisy 1700 front panel	34.0161	222.00	**273.06**

WAVE PANELS

Wave



End panel



Wave Detail



Wave Bath Panels - White Gloss

Description	Colour	Code	€ Ex VAT	€ Inc VAT
Wave 1700 front panel	White Gloss	29.0018	219.00	**269.37**
Wave 1800 front panel	White Gloss	29.0028	234.00	**287.82**
Wave 700 end panel	White Gloss	29.0038	126.00	**154.98**
Wave 750 end panel	White Gloss	29.0048	129.00	**158.67**
Wave 800 end panel	White Gloss	29.0058	133.00	**163.59**

Toilet Seats

SHERWOOD TOILET SEATS

Suitable to match all Sherwood styles of panel with an option of a soft-close hinge.

Sherwood Toilet Seats

Description	Colour	Code	€ Ex VAT	€ Inc VAT
Sherwood MDF seat in vinyl wrap with chrome-plated bar hinges	White Ash	34.1095	135.00	**166.05**
Sherwood MDF seat in vinyl wrap with chrome-plated bar hinges	Light Walnut	34.10904	135.00	**166.05**
Sherwood MDF seat in vinyl wrap with chrome-plated bar hinges	Beech	34.1097	135.00	**166.05**
Sherwood MDF seat in vinyl wrap with chrome-plated bar hinges	Dark Walnut	34.10905	135.00	**166.05**
Sherwood MDF seat in vinyl wrap with chrome-plated bar hinges	Natural Oak	34.1093	135.00	**166.05**
Sherwood MDF seat in vinyl wrap with chrome-plated bar hinges	White Gloss	34.1098	161.00	**198.03**
Sherwood MDF seat in vinyl wrap with chrome plated soft-close hinges *	White Ash	34.0125	220.00	**270.60**
Sherwood MDF seat in vinyl wrap with chrome plated soft-close hinges *	Light Walnut	34.01204	220.00	**270.60**
Sherwood MDF seat in vinyl wrap with chrome plated soft-close hinges *	Beech	34.0127	220.00	**270.60**
Sherwood MDF seat in vinyl wrap with chrome plated soft-close hinges *	Dark Walnut	34.01205	220.00	**270.60**
Sherwood MDF seat in vinyl wrap with chrome plated soft-close hinges *	Natural Oak	34.0123	220.00	**270.60**
Sherwood MDF seat in vinyl wrap with chrome plated soft-close hinges *	White Gloss	34.0128	237.00	**291.51**

*Not bar hinges & top fix hinge.



Soft Close Available



FEATURES
- British manufactured
- FSC - All materials sourced from protected forests
- MDF
- Soft close seat option available
- Hinge centres adjust 155-165mm

Sherwood toilet seat
440mm (from back of hinge) x 375mm at widest point, 420mm x 375mm lid size.

Light Walnut



White Ash



Beech

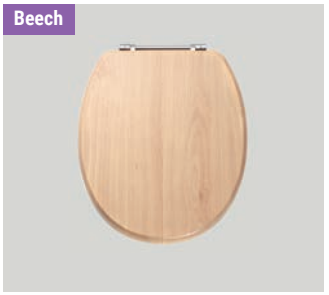

Dark Walnut

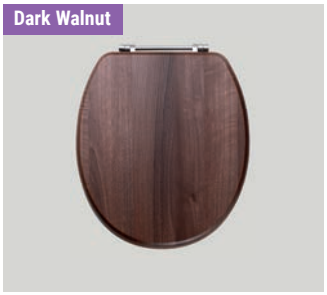

White Gloss



Natural Oak



DIAMANTE TOILET SEATS

Diamante High Gloss Toilet Seat

Description	Colour	Code	€ Ex VAT	€ Inc VAT
Sherwood seat with Chrome hinges	White Gloss	34.1098	161.00	**198.03**
Sherwood seat soft close hinge*	White Gloss	34.0128	237.00	**291.51**
Sherwood seat with Chrome hinges	High Gloss Black	34.10901	161.00	**198.03**
Sherwood seat soft close hinge*	High Gloss Black	34.01201	237.00	**291.51**

NB. Soft close hinges are standard not bar type.*Top fix hinge.

FEATURES
- Soft close seat option available

White Gloss



High Gloss Black



Colours subject to the limitations of the printing process.
Colour sample available on request.



Mirrors & Cabinets

Cabinet mirrors, mirrors with lights, plain mirrors, featuring lots of exciting designs from art deco minimalist to the more traditional approach.







Contents

Plain mirrors	326
Vanity mirrors	327
Mirrored cabinets	328-338
Mirrored corner cabinets	338
Mirrors with cornice	339 - 341
Mirrors with LED	342 - 350
Mirrors with florescent light	351

Plain Mirrors

BRUNSWICK



Brunswick

Description (height x width)	Code	€ Ex VAT	€ Inc VAT
Brunswick bathroom mirror 700 x 500 with shelf	40.0019	112.00	**137.76**

FEATURES
- Complete with glass shelf
- Clean and simple design, that works in a modern or traditional setting.
- Bevelled edge

SAVANNAH



Savannah

Description (height x width)	Code	€ Ex VAT	€ Inc VAT
Savannah Mirror 750 x 550 with Shelf	40.0018	112.00	**137.76**

FEATURES
- Complete with glass shelf
- Bevelled edge
- Tempered glass

SEATTLE



Seattle

Description (height x width)	Code	€ Ex VAT	€ Inc VAT
Seattle 500 x 700mm two-layer mirror	56.1018	195.00	**239.85**

FEATURES
- Tempered glass

PLAIN MIRROR



Pictured 40.0021

Plain Mirror

Description (height x width)	Code	€ Ex VAT	€ Inc VAT
Plain Mirror 555 x 1000mm	40.0020	135.00	**166.05**
Plain Mirror 555 x 810mm	40.0021	129.00	**158.67**

FEATURES
- Mounted horizontally or vertically
- Bevelled edge



Pictured 40.0020

Vanity Mirrors

ROUND LED VANITY MIRROR



Round LED Vanity Mirror			
Description	**Code**	**€ Ex VAT**	**€ Inc VAT**
Round LED vanity mirror	40.0039	462.00	**568.26**

FEATURES
- 5x magnification (side one)
- Plain mirror (side two)
- LED lights
- Double swing arm
- IP 44



SQUARE LED VANITY MIRROR



Square LED Vanity Mirror			
Description	**Code**	**€ Ex VAT**	**€ Inc VAT**
Square LED vanity mirror	40.0040	332.00	**408.36**

FEATURES
- 5x magnification (side one)
- Plain mirror (side two)
- LED lights
- Double swing arm
- IP 44



ROUND FROSTED LED VANITY MIRROR

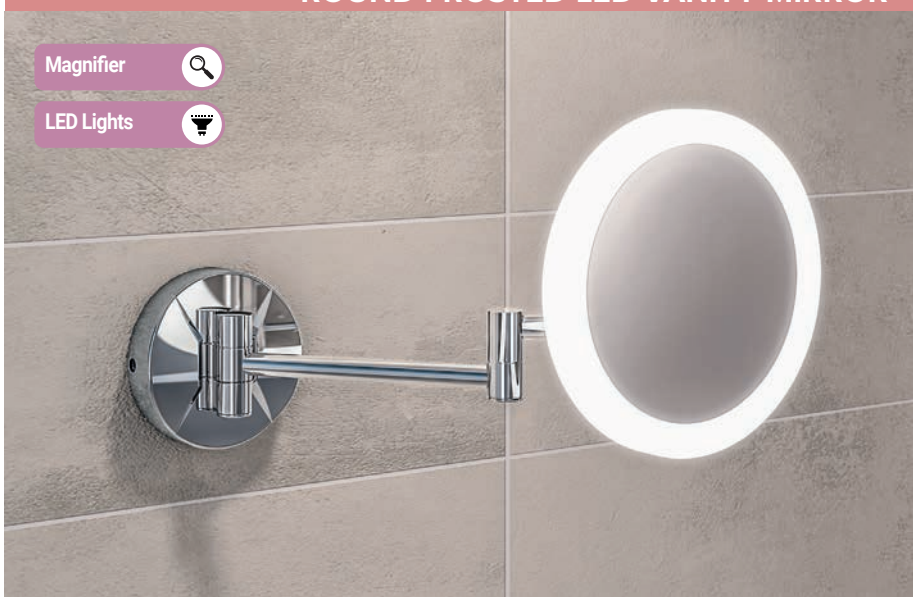

Round Frosted LED Vanity Mirror			
Description	**Code**	**€ Ex VAT**	**€ Inc VAT**
Round Frosted LED vanity mirror	40.0041	318.00	**391.14**

FEATURES
- 5x magnification
- LED lights
- Double swing arm
- IP 44



Cabinet Mirrors

CABINET MIRROR



Cabinet Mirror			
Description (width x depth x height)	Code	€ Ex VAT	€ Inc VAT
Cabinet mirror 460 x 120 x 660	56.1001	243.00	**298.89**
Cabinet mirror 250 x 120 x 660	56.1002	181.00	**222.63**

FEATURES
- Cupboards are reversible
- Soft close doors
- Modular versatile system

*800mm wide when fully opened - 56.1001
*430mm wide when fully opened - 56.1002



BOSINI



Bosini			
Description (width x height x depth)	Code	€ Ex VAT	€ Inc VAT
Bosini 600 x 700 x 120 2 Door Mirror Cabinet	40.0024	496.00	**610.08**
Bosini 600 x 800 x 120 2 Door Mirror Cabinet	40.0025	569.00	**699.87**

FEATURES
- Internal mirror on door
- Can be recessed into the wall.
- Soft close hinges
- Adjustable shelving



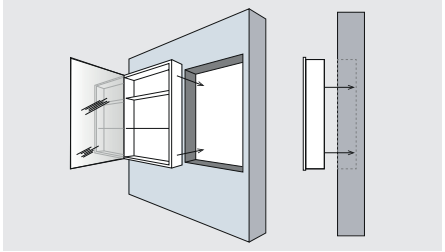

Cabinet Mirrors

Caldini - 1 Door Cabinet

Description (width x height x depth)	Code	€ Ex VAT	€ Inc VAT
Caldini 350 x 450 x 130 LED 1 Door Mirror Cabinet	40.0026	605.00	**744.15**
Caldini 400 x 600 x 130 LED 1 Door Mirror Cabinet	40.0027	720.00	**885.60**
Caldini 500 x 700 x 130 LED 1 Door Mirror Cabinet	40.0028	810.00	**996.30**

FEATURES
- Internal mirror on the door
- Aluminium frame
- Infinitely variable shelf heights
- Demister
- Shaver socket
- LED lights on the two outer sides, inside and underside of the cabinet
- Soft close hinges

Cabinet is IP54.





Demister

LED Lights

Shaver Socket

CALDINI 1 DOOR CABINET



Caldini - 2 Door Cabinet

Description (width x height x depth)	Code	€ Ex VAT	€ Inc VAT
Caldini 600 x 700 x 130 LED 2 Door Cabinet Mirror	40.0029	1011.00	**1243.53**
Caldini 800 x 700 x 130 LED 2 Door Mirror Cabinet	40.0030	1076.00	**1323.48**

FEATURES
- Internal mirror on door
- Aluminium frame
- Infinitely variable shelf heights
- Demister
- Shaver socket
- LED lights on the inside, outside and underside of the cabinet
- Soft close hinges

Cabinet is IP54.





CALDINI 2 DOOR CABINET

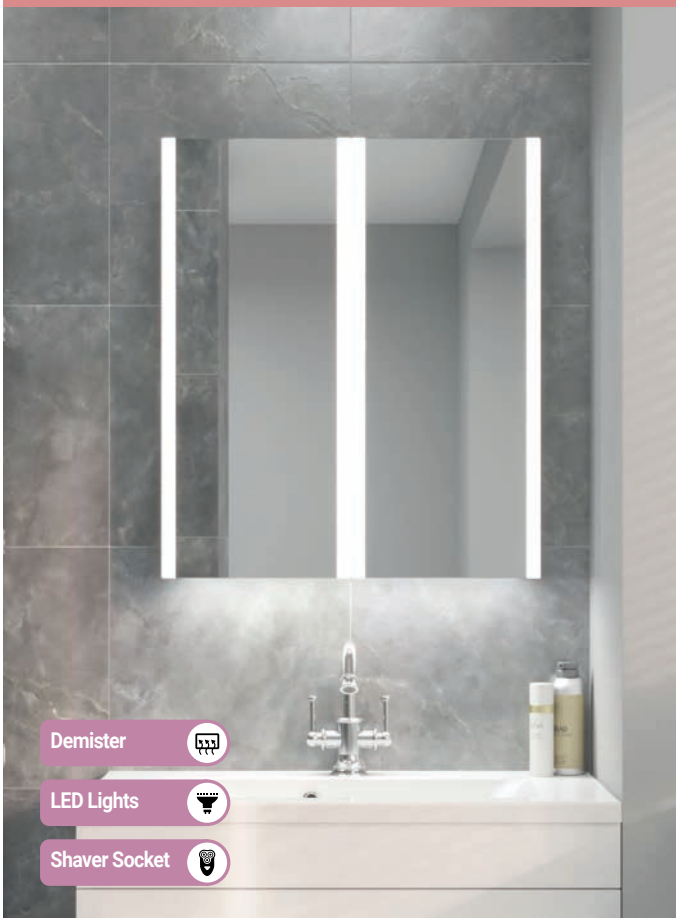

Cabinet Mirrors

CASSIO CABINET

Cassio Cabinet

Description (width x height x depth)	Code	€ Ex VAT	€ Inc VAT
Cassio 500 x 700 LED Mirror - 1 Door	40.1022	784.00	**964.32**
Cassio 600 x 700 LED Mirror - 2 Door	40.1023	954.00	**1173.42**
Cassio 800 x 700 LED Mirror - 2 Door	40.1024	1043.00	**1282.89**
Cassio 1200 x 700 LED Mirror - 3 Door	40.1025	1420.00	**1746.60**

FEATURES

- Internal mirror on door
- Aluminium cabinet
- Infinitely variable shelf heights
- Demister (on both doors on all 2-door models. Demister on middle door on 3-door model)
- USB & Shaver socket
- LED lights on the inside, outside and underneath
- Infrared sensor
- Soft close hinges

Cabinet is IP44.









Cabinet Mirrors

LUCERNE





Lucerne

Description (width x height x depth)	Code	€ Ex VAT	€ Inc VAT
Lucerne 700x500x170 Mirrored cabinet	56.1048	832.00	**1023.36**

FEATURES
- Sensor on/off
- Two LED lights

Cabinet is IP54.



ZURICH



Zurich

Description (width x height x depth)	Code	€ Ex VAT	€ Inc VAT
Zurich 500x700x140 Mirrored cabinet	56.1047	832.00	**1023.36**

FEATURES
- Two light sensors
- Internal shaver socket
- Soft close door
- Digital clock

Cabinet is IP54.

Cabinet Mirrors

RAVINI





Ravini

Description (width x height x depth)	Code	€ Ex VAT	€ Inc VAT
Ravini 400 x 600 x 120 1 Door Mirror Cabinet White	40.0022	367.00	**451.41**
Ravini 500 x 700 x 120 1 Door Mirror Cabinet White	40.0023	391.00	**480.93**

FEATURES
- Internal mirror on door
- Can be recessed into the wall
- Soft close hinges
- Adjustable shelving

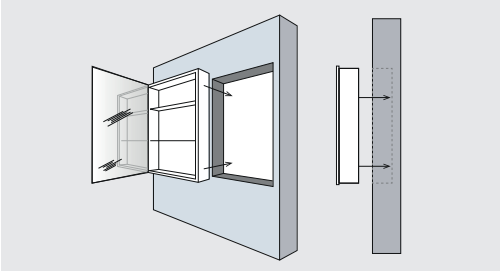

The Ravini can be installed outside of the wall or recessed into the wall

Cabinet Mirrors

Modest, versatile cabinets available with LED lighting and mirrors in various sizes to suit most bathrooms. Pull cord for LED lighting located inside the cabinet.

Plain Cabinets (Single Knob)			
Description (width x height x depth)	**Code**	**€ Ex VAT**	**€ Inc VAT**
400 x 400 x 180mm Cabinet White†	56.1038	163.00	**200.49**
400 x 800 x 180mm Cabinet White†	56.1040	250.00	**307.50**

Plain Cabinets (Single Knob with LED)			
Description (width x height x depth)	**Code**	**€ Ex VAT**	**€ Inc VAT**
400 x400 x180mm Cabinet with LED White†	56.1039	201.00	**247.23**
400 x 800 x 180mm Cabinet with LED White†	56.1041	286.00	**351.78**

FEATURES
- Modular versatile system
- Available with a light option
- Soft close doors

Mirror with LED IP54. †While stocks last



PLAIN CABINETS



600mm mirror cabinet with a choice of two cornices - a light cornice or a shaver socket cornice. Both come with a single halogen lamp. Cornices are sold separately.

Cabinet - 1.094			
Description	**Code**	**€ Ex VAT**	**€ Inc VAT**
60cm cabinet mirror (no cornice) White	1.094	320.00	**393.60**
60cm light cabinet cornice, 1 spot White	1.096	191.00	**234.93**
60cm light shaver skt cabinet cornice**	1.097	317.00	**389.91**

430mm mirror cabinet with a light cornice (one halogen lamp with pull cord operation). The cornice is sold separately from the cabinet. Door is not reversible.

Cabinet - 1.090			
Description	**Code**	**€ Ex VAT**	**€ Inc VAT**
43cm cabinet mirror (no cornice) White	1.090	285.00	**350.55**
43cm light cabinet cornice, 1 spot White	1.093	163.00	**200.49**

All cornices are IP54. **During the life of this catalogue lights may change to LED.





CABINET WITH CORNICES



Cabinet 80cm

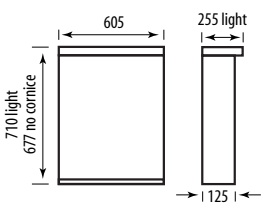

Cabinet 43cm

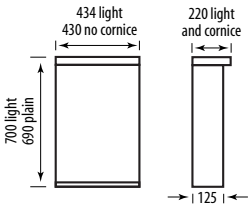

Cabinet Mirrors

CABINET WITH CORNICES





800mm mirror cabinet with a choice of two cornices – a light cornice or a shaver socket cornice. Both come with two lamps.

Cabinet - 1.401

Description	Code	€ Ex VAT	€ Inc VAT
80cm cabinet mirror (no cornice) White	1.401	355.00	**436.65**
80cm light cabinet cornice, 2 spots White	1.403	254.00	**312.42**
80cm light shaver skt cabinet cornice White	1.404	370.00	**455.10**

Cabinet - 1.405

Description	Code	€ Ex VAT	€ Inc VAT
100cm cabinet mirror (no cornice) White	1.405	439.00	**539.97**
100cm light cabinet cornice, 2 spots White	1.407	283.00	**348.09**
100cm light shaver skt cabinet cornice White	1.408	391.00	**480.93**

All cornices are sold separately from the mirror cabinets.
All cornices are IP54



Cabinet 80cm

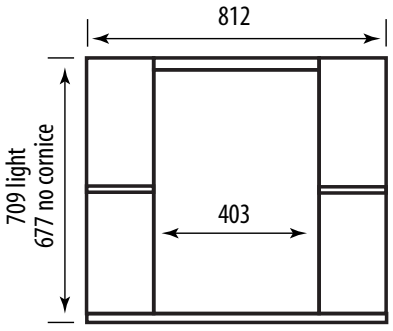

Cabinet 100cm

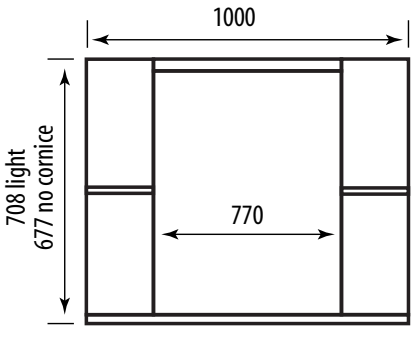

1000mm mirror cabinet with a choice of two cornices - a light cornice or a socket cornice. Both come with two halogen lamps.* Cornices are sold separately. ** During the lifetime of this brochure lights may change to LED.

Cabinet Mirrors



BONITO 120

Bonito 120

Description	Code	€ Ex VAT	€ Inc VAT
Bonito 60cm wall unit - door White	1.034	362.00	**445.26**
Bonito 60cm mirror White	1.036	210.00	**258.30**
Diamante 60cm Cornice White	1.204	317.00	**389.91**

NB: Mirror must be fitted with cornice. Cornice is IP54. *During the life of this catalogue lights may change to LED.

FEATURES
- Shaver socket
- 60 cm cornice has two LED lamps*
- Slimline, just 120mm projection

Width: 600mm. Height: 706mm.
N.B. Cornice sold separately

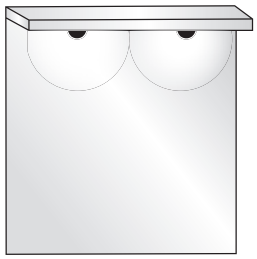

Mirror & Cornice with halogen and pull-cord operational

The 60cm cornice has two halogen lamps and a shaver socket.**

Diamante 110

Description (width x height x depth)	Code	€ Ex VAT	€ Inc VAT
Diamante 50cm wall unit White	1.254	362.00	**445.26**
Bonito 60cm mirror White	1.036	210.00	**258.30**
Diamante 60cm Cornice White	1.204	317.00	**389.91**

FEATURES
- Slimline, just 120mm projection
- Shaver socket
- Wall unit - 2 shelves

NB: Mirror must be fitted with cornice. Cornice is IP54. **During the life of this catalogue lights may change to LED.

DIAMANTE 110



Mirror & Cornice 60cm

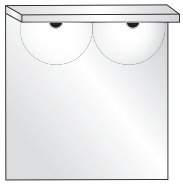

MIRROR & CORNICE WITH LED LIGHTS AND PULL-CORD OPERATION

Width: 600mm
Height: 706mm

N.B. Cornice sold separately

Wall Cupboards 50cm

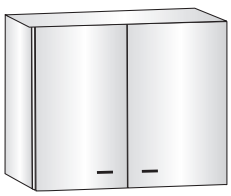

500MM WALL CUPBOARD WITH TWO DOORS

Width: 500mm
Depth: 176mm
Height: 700mm

Cabinet Mirrors

SINGLE KNOB MIRROR CABINET

Plain Cabinets

Description (width x height x depth)	Code	€ Ex VAT	€ Inc VAT
400 x 400 x 180mm Mirror Cabinet	56.1042	177.00	**217.71**
400 x 800 x 180mm Mirror Cabinet	56.1044	282.00	**346.86**
Mirror with LED IP54.			

Plain Cabinets

Description (width x height x depth)	Code	€ Ex VAT	€ Inc VAT
400 x400 x180mm Cabinet with LED White†	56.1039	201.00	**247.23**
400 x 800 x 180mm Cabinet with LED White†	56.1041	286.00	**351.78**
Mirror with LED IP54. †While stocks last			

56.1039

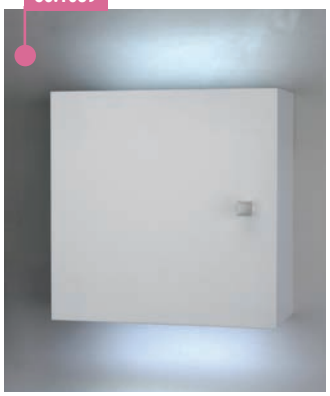

56.1039



56.1041





Cabinet Mirrors

OSLO



These versatile, modular wall cupboards are ideal for family needs giving everyone their own storage space. The cupboards are reversible, feature soft close doors and can be used in any combination.

Oslo

Description	Code	€ Ex VAT	€ Inc VAT
Oslo square 400mm wall cupboard White	1.263	282.00	**346.86**
Oslo square 400mm mirror wall cupboard White	1.264	296.00	**364.08**

1.263



1.266



Description	Code	€ Ex VAT	€ Inc VAT
Oslo wall cupboard 400 x 800mm White	1.265	355.00	**436.65**
Oslo wall cupboard 400 x 1000mm White	1.266	384.00	**472.32**



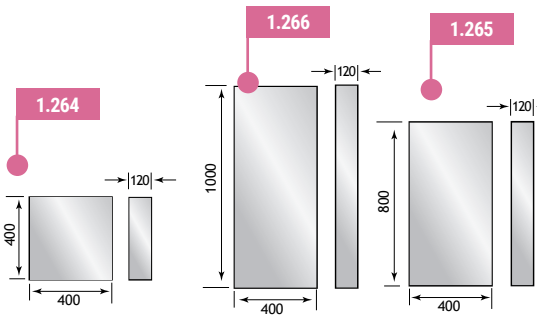

Cabinet Mirrors

BONITO CORNER UNIT





Bonito corner mirror 1.088
(Mirror only, not cabinet)

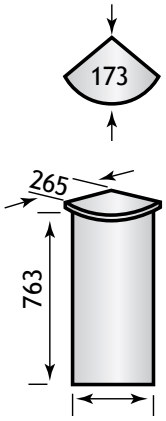

Corner cupboard light
cornice 1-002

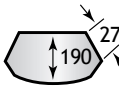

Corner mirror cupboard 1-000

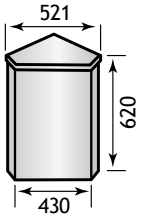

Bonito

Description	Code	€ Ex VAT	€ Inc VAT
Corner mirror cupboard carcase High gloss white	1.000	350.00	**430.50**
Corner cupboard light cornice High Gloss White	1.002	145.00	**178.35**
Bonito Corner mirror with 1 Halogen White *	1.088	282.00	**346.86**

NB: Cornice is IP54. *During the life of this catalogue lights may change to LED.

Madrid Mirrors









Madrid

Description	Code	€ Ex VAT	€ Inc VAT
43cm mirror 1 Halogen White	1.086	350.00	**430.50**
Madrid 20cm wall unit White	1.015	210.00	**258.30**
Diamante/Madrid 20cm single shelf White	1.217	133.00	**163.59**
Diamante 60cm mirror - *	1.203	210.00	**258.30**
Diamante 60cm Cornice White	1.204	317.00	**389.91**
Diamante 80cm mirror - *	1.208	241.00	**296.43**
Diamante 80cm Cornice White	1.209	388.00	**477.24**
Diamante 100cm mirror - *	1.213	269.00	**330.87**
Diamante 100cm Cornice White	1.214	416.00	**511.68**

Sorrento Mirrors

SORRENTO





Sorrento			
Description	**Code**	**€ Ex VAT**	**€ Inc VAT**
Sorrento 40cm mirror -	1.418	177.00	**217.71**
Sorrento 45cm cornice* High Gloss White	1.520	276.00	**339.48**
Sorrento 60cm cornice* High Gloss White	1.521	314.00	**386.22**
Sorrento 70cm mirror -	1.419	238.00	**292.74**
Sorrento 80cm cornice* High Gloss White	1.522	370.00	**455.10**
Sorrento 800mm 'Wave' action infra red cornice High gloss white	1.219	471.00	**579.33**

FEATURES
- Separate shaver socket
- 800 cornice has a sensor option

NB: Mirror must be fitted with cornice. All cornices are IP54.
*During the life of this catalogue lights may change to LED.

Cornices are now available with an option of 'Wave' action infra red technology to activate lights.





LED Mirrors

Faro

Description	Code	€ Ex VAT	€ Inc VAT
Faro 39cm mirror	1.270	194.00	**238.62**
Faro 39cm cornice	1.277	276.00	**339.48**
Faro 58cm wave action cornice	1.272	405.00	**498.15**
Faro 58cm mirror	1.271	234.00	**287.82**
Faro 80cm mirror	1.273	269.00	**330.87**
Faro 80cm wave action cornice	1.274	468.00	**575.64**
Faro 100cm mirror	1.275	308.00	**378.84**
Faro 100cm wave action cornice	1.276	516.00	**634.68**
Faro 20cm Wall Cupboard*	1.268	254.00	**312.42**

FEATURES
• Wave action infrared sensor (on/off)

*This line needs to be doubled if two cupboards required. Mirror must be fitted with cornice. Cornice is IP54. **During the life of this catalogue lights may change to LED.



FARO



ARNO



Arno

Description (Width x height)	Code	€ Ex VAT	€ Inc VAT
Arno 500 x 700mm LED mirror	40.1020	455.00	**559.65**
Arno 600 x 800mm LED mirror	40.1021	513.00	**630.99**

FEATURES
• LED lights
• Matt black aluminium frame
• Fitted portrait or landscape
• Touch switch
• Demister

IP44

LED Mirrors

BIVIEVE





Bivieve

Description (Width x height)	Code	€ Ex VAT	€ Inc VAT
Bivieve 500 x 700mm LED mirror	40.1012	289.00	**355.47**
Bivieve 600 x 800mm LED mirror	40.1013	336.00	**413.28**

FEATURES
- LED lights
- Fitted portrait or landscape
- Aluminium frame
- Touch sensor
- Demister

IP44

LED Mirrors

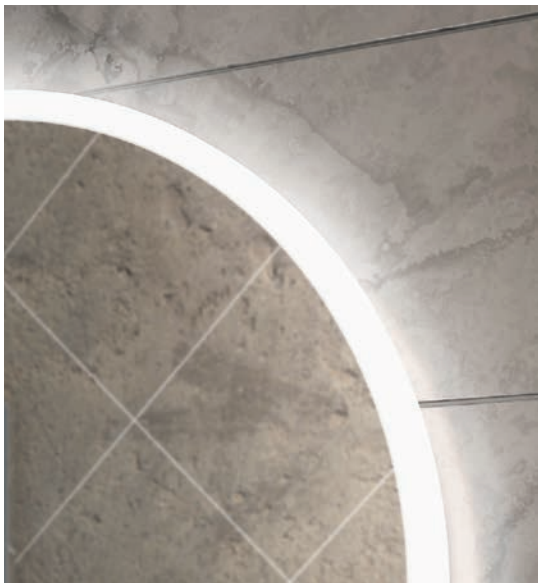

Conza			
Description (Width x height)	**Code**	**€ Ex VAT**	**€ Inc VAT**
Conza 500 x 500mm LED mirror	40.1014	437.00	**537.51**
Conza 600 x 600mm LED mirror	40.1015	485.00	**596.55**

FEATURES
- Demister
- LED lights
- On/off touch sensor

IP44

CONZA





Ellera			
Description (diameter x depth)	**Code**	**€ Ex VAT**	**€ Inc VAT**
Ellera 580 x 40 Circular LED Mirror	40.0036	363.00	**446.49**
Ellera 620 x 40 Circular LED Mirror	40.0037	394.00	**484.62**

FEATURES
- On/off touch sensor switch
- Demister
- LED lights
- Touch Sensor

Mirror is IP54.

ELLERA



LED Mirrors

ESK

Touch Sensor
Demister
LED Lights



Esk

Description (width x height)	Code	€ Ex VAT	€ Inc VAT
Esk 600 x 700 LED mirror	56.1079	388.00	**477.24**
Esk 700 x 700 LED mirror	56.1080	441.00	**542.43**

FEATURES
- LED lights
- On/off touch sensor switch
- Demister pad

Mirror is IP54.

ETTRICK

Touch Sensor
LED Lights

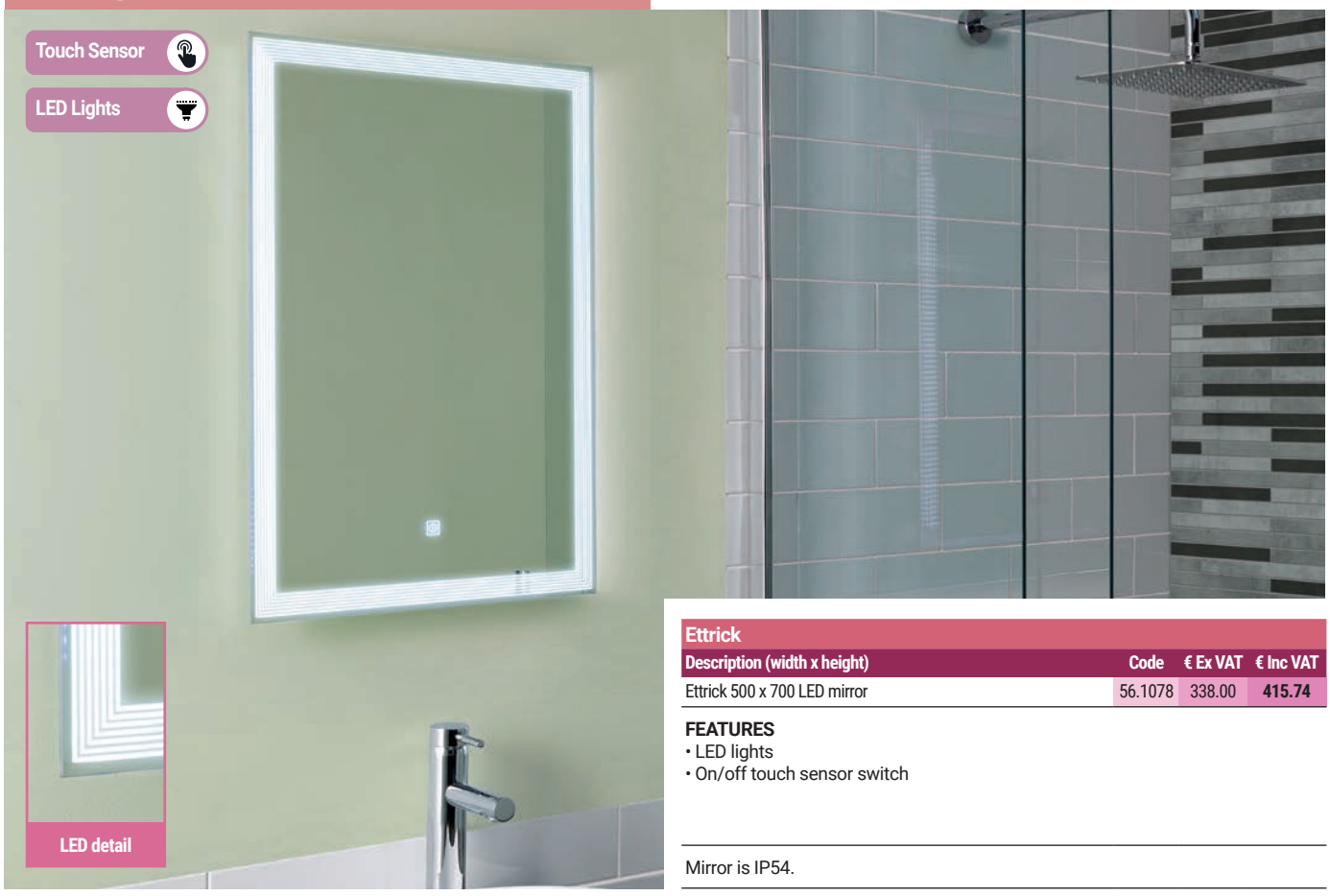

LED detail

Ettrick

Description (width x height)	Code	€ Ex VAT	€ Inc VAT
Ettrick 500 x 700 LED mirror	56.1078	338.00	**415.74**

FEATURES
- LED lights
- On/off touch sensor switch

Mirror is IP54.

LED Mirrors



FABRIANO



Fabriano			
Description (width x height)	**Code**	**€ Ex VAT**	**€ Inc VAT**
Fabriano 700 x 500mm LED Landscape Mirror	40.1004	485.00	**596.55**
Fabriano 700 x 500mm LED Portrait Mirror	40.1005	485.00	**596.55**

FEATURES
- LED lighting
- Sensor control
- Digital clock
- Magnifier (6x magnification)
- Demister

Mirror is IP54.

LANGTON



Langton			
Description (Width x height)	**Code**	**€ Ex VAT**	**€ Inc VAT**
Langton 500 x 700 illuminated mirror	56.1073	348.00	**428.04**
Langton 600 x 700 illuminated mirror	56.1074	362.00	**445.26**

FEATURES
- Light strips
- Demister pad
- On/off touch sensor switch
- Digital clock

Mirror is IP54

LED Mirrors

LARGO





Largo

Description (Width x height)	Code	€ Ex VAT	€ Inc VAT
Largo 600 x 600mm LED mirror	40.1016	478.00	**587.94**
Largo 800 x 800mm LED mirror	40.1017	588.00	**723.24**

FEATURES
- On/off touch sensor switch
- Matt black aluminium frame
- Demister
- LED lights

IP44

LEVEN

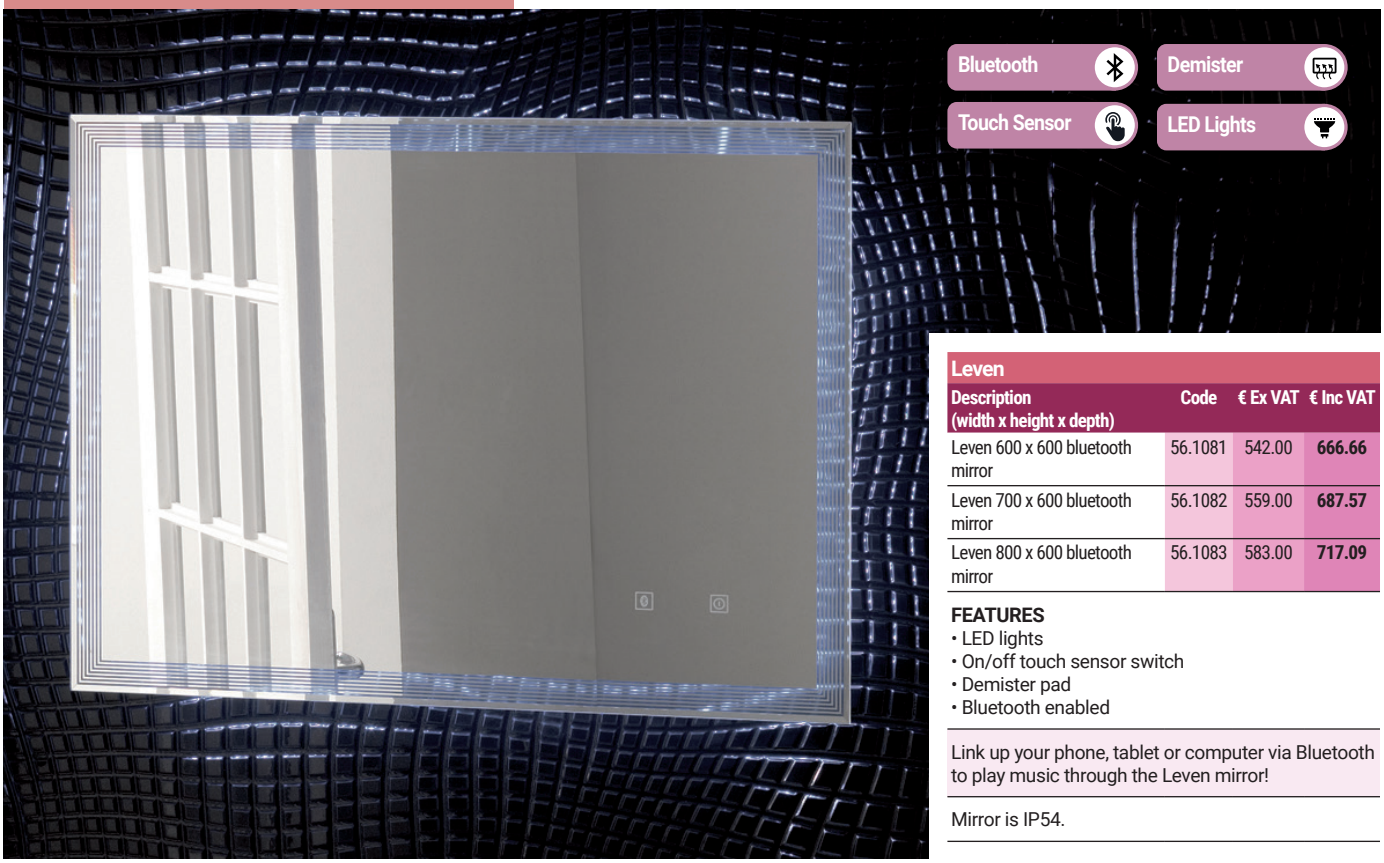

Leven

Description (width x height x depth)	Code	€ Ex VAT	€ Inc VAT
Leven 600 x 600 bluetooth mirror	56.1081	542.00	**666.66**
Leven 700 x 600 bluetooth mirror	56.1082	559.00	**687.57**
Leven 800 x 600 bluetooth mirror	56.1083	583.00	**717.09**

FEATURES
- LED lights
- On/off touch sensor switch
- Demister pad
- Bluetooth enabled

Link up your phone, tablet or computer via Bluetooth to play music through the Leven mirror!

Mirror is IP54.

LED Mirrors



LED BATHROOM MIRROR



LED Bathroom Mirror

Description (width x height)	Code	€ Ex VAT	€ Inc VAT
LED bathroom mirror 700 x 500 -	56.1004	406.00	**499.38**
LED bathroom mirror 700 x 600 -	56.1005	443.00	**544.89**

FEATURES
- LED lights
- Touch sensor

Mirror is IP54.



ORTA

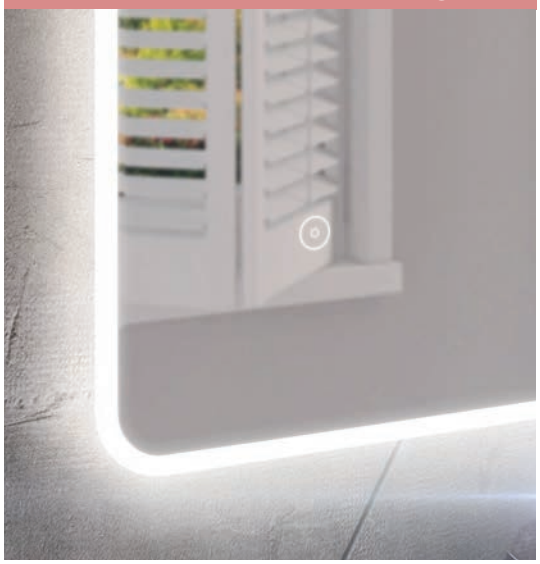

Orta

Description (width x height)	Code	€ Ex VAT	€ Inc VAT
Orta 500 x 700mm LED mirror	40.1006	331.00	**407.13**
Orta 600 x 800mm LED mirror	40.1007	366.00	**450.18**
Orta 1200 x 600mm LED mirror	40.1008	532.00	**654.36**

FEATURES
- Demister
- LED lights
- Fitted portrait or landscape
- Touch sensor
- Aluminium frame

Mirror is IP44.

LED Mirrors

OVADA



Ovada

Description (width x height x depth)	Code	€ Ex VAT	€ Inc VAT
Ovada 500 x 700 x 45 Mirror with Light	40.0038	234.00	**287.82**

FEATURES
- Demister
- LED lights

Mirror is IP54.



PEGELLA

Pegella Mirror 40.0034



Pegella

Description (width x height x depth)	Code	€ Ex VAT	€ Inc VAT
Pegella 400 x 600 x 45 LED Mirror	40.0031	370.00	**455.10**
Pegella 500 x 700 x 45 LED MIrror	40.0032	429.00	**527.67**
Pegella 600 x 800 x 45 LED Mirror	40.0033	488.00	**600.24**
Pegella 800 x 700 x 45 LED Mirror	40.0034	518.00	**637.14**
Pegella 1400 x 420 x 45 LED Mirror	40.0035	657.00	**808.11**

FEATURES
- Demister
- LED lights
- On/off touch sensor

Mirror is IP54.

Pegella Mirror 40.0035



LED Mirrors



SPEY

Spey

Description (width x height)	Code	€ Ex VAT	€ Inc VAT
Spey 500 x 700 LED shelf mirror †	56.1084	468.00	**575.64**
Spey 600 x 700 LED shelf mirror †	56.1085	499.00	**613.77**
Spey 700 x 700 LED shelf mirror †	56.1086	534.00	**656.82**

FEATURES
- LED lights
- On/off touch sensor switch
- Digital clock
- Demister pad
- Integral shelf

You have the time, you have the light, and also a display shelf. All built-in to the Spey mirror.

Mirror is IP54. †While stocks last



TREVISO

Treviso

Description (width x height x depth)	Light Colour	Code	€ Ex VAT	€ Inc VAT
Treviso 700 x 500mm LED Landscape Mirror White LED	Treviso 700 x 500mm LED Landscape Mirror	40.1000	345.00	**424.35**
Treviso 700 x 500mm LED Landscape Mirror Blue LED	Treviso 700 x 500mm LED Landscape Mirror	40.1001	345.00	**424.35**
Treviso 700 x 500mm LED Portrait Mirror	Treviso 700 x 500mm LED Portrait Mirror	40.1002	345.00	**424.35**



LED Mirrors

VARANO



Varano			
Description (Width x height)	**Code**	**€ Ex VAT**	**€ Inc VAT**
Varano 500x700mm LED mirror	40.1018	412.00	**506.76**
Varano 600x800mm LED mirror	40.1019	472.00	**580.56**

FEATURES
- On/off touch sensor switch
- Matt black aluminium frame
- Demister
- LED lights
- Fitted portrait or landscape

IP44

VERNAY



Vernay			
Description (width x height)	**Code**	**€ Ex VAT**	**€ Inc VAT**
Vernay 500x700mm LED mirror	40.1009	314.00	**386.22**
Vernay 600x800mm LED mirror	40.1010	350.00	**430.50**
Vernay 1200x600mm LED mirror	40.1011	520.00	**639.60**

FEATURES
- On/off touch sensor switch
- Demister
- LED lights
- Fitted portrait or landscape

Mirror is IP44.

Florescent Mirrors

CHARLESTON

Charleston			
Description (width x height)	**Code**	**€ Ex VAT**	**€ Inc VAT**
Charleston bathroom mirror 500 x 700 -	66.0001	205.00	**252.15**
Charleston Bathroom Mirror 600 x 700	40.0014	237.00	**291.51**
Charleston bathroom mirror 600 x 800 -	66.0003	244.00	**300.12**

FEATURES
- Back lit
- Fluorescent tube light

Mirror is IP54.



ROCKLAND



Rockland			
Description (diameter)	**Code**	**€ Ex VAT**	**€ Inc VAT**
Rockland circular bathroom mirror 600mm -	66.0004	219.00	**269.37**

FEATURES
- Back lit
- Fluorescent light

Mirror is IP54.



Shower Enclosures

Luxurious, contemporary enclosures with 5mm-10mm tempered glass.

Many products benefit from a 10 year guarantee with easy-clean glass and a comprehensive range of shower trays.



Contents

Volente enclosures	354 - 372
Vulcan enclosures	373 - 376
Vantage enclosures	377 - 383
Vantage 2000 enclosures	384 - 401
Corniche enclosures	402 - 405
Corniche 2000 enclosures	406 - 409
Vanguard encloures	410 - 413
Walk-in enclosures	414 - 433
Biava Wet Floor	434 - 435
Shower trays	436 - 449

Volente

VOLENTE FRAMELESS DOOR





For an alcove situation, a frameless wall profile is needed 58.714

Luxurious, easy to clean, contemporary frameless enclosure in 6mm tempered safety glass, height 1850mm.

FEATURES

- 10 Year manufacturer's guarantee*
- Easy clean glass
- Concealed fittings
- Trays available to match
- 6mm Tempered safety glass
- Polished Chrome

*With conditions

DOORS

Volente Frameless Door

Size	Adjustment	Door Opening	Code	€ Ex VAT	€ Inc VAT
700mm Door	668mm-690mm†	560mm	58.811	615.00	**756.45**
760mm Door	728mm-750mm†	620mm	58.812	632.00	**777.36**
800mm Door	768mm-790mm†	660mm	58.813	654.00	**804.42**
900mm Door	868mm-890mm†	760mm	58.814	667.00	**820.41**
1000mm Door	968mm-990mm†	860mm	58.815	692.00	**851.16**
Alcove wall profile	Adds 10mm	-	58.714	117.00	**143.91**

†Alcove wall profile required for Alcove situation, adds 10mm to door adjustment.

EXTRAS

Volente Side Panel

Size	Adjustment	Code	€ Ex VAT	€ Inc VAT
700mm Side panel	672mm-690mm	58.614	462.00	**568.26**
760mm Side panel	732mm-750mm	58.615	462.00	**568.26**
800mm Side panel	772mm-790mm	58.616	462.00	**568.26**
900mm Side panel	872mm-890mm	58.611	481.00	**591.63**
1000mm Side panel	972mm-990mm	58.612	516.00	**634.68**
1200mm Side panel	1172mm-1190mm	58.613	581.00	**714.63**

EXTRAS

Volente Extension Profile*

Description	Code	€ Ex VAT	€ Inc VAT
31mm Extension profile	58.012	86.00	**105.78**

*Adds 31mm to overall size of door to give greater adjustment, can only be used with door, not on side panel.

Volente

VOLENTE DOUBLE SLIDING DOOR



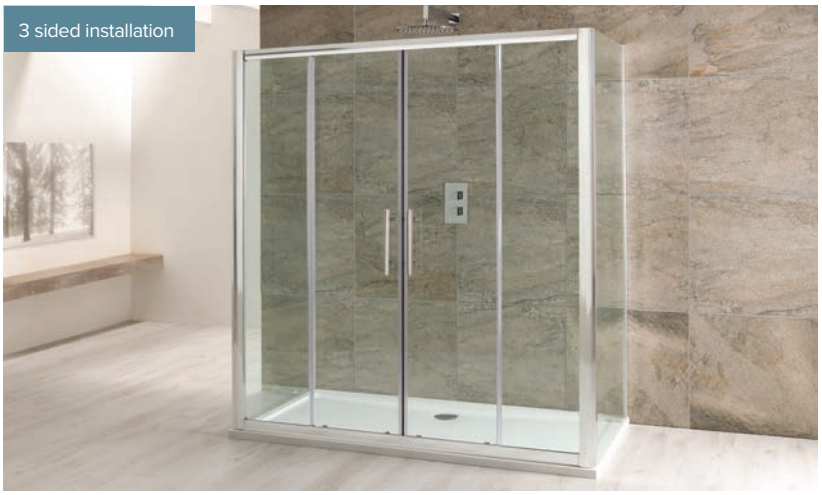

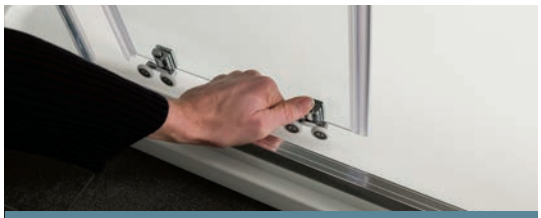

Runners release for ease of cleaning

Luxurious, easy to clean, contemporary framed enclosure in 6mm tempered safety glass, with central opening slider doors, 1850mm high.

FEATURES

- 10 Year manufacturer's guarantee*
- Easy clean glass
- Concealed fittings
- Trays available to match
- Power shower approved
- 3 side installation possible
- 6mm Tempered safety glass
- Polished Chrome

*With conditions

When fitting with 2 side panels (as illustrated) you will need to select the next smallest door size from your selected tray. For example: for a 900mm tray you will need an 800mm door. If the difference between the tray and the door is 100mm you will also need TWO extension profiles. Please call 01452 317890 for assistance if you are in any doubt.

DOORS

Volente Sliding Door

Size	Adjustment	Door Opening	Code	€ Ex VAT	€ Inc VAT
1200mm double sliding door	1160mm-1200mm	480mm	58.210	821.00	**1009.83**
1400mm double sliding door	1360mm-1400mm	580mm	58.211	898.00	**1104.54**
1500mm double sliding door	1460mm-1500mm	600mm	58.212	934.00	**1148.82**
1600mm double sliding door	1560mm-1600mm	640mm	58.213	979.00	**1204.17**
1700mm double sliding door	1660mm-1700mm	680mm	58.214	1013.00	**1245.99**
1800mm double sliding door	1760mm-1800mm	720mm	58.215	1043.00	**1282.89**
2000mm double sliding door	1960mm-2000mm	800mm	58.216	1116.00	**1372.68**

Adjustment varies when fitted with a side panel.

EXTRAS

Volente Side Panel

Size	Adjustment	Code	€ Ex VAT	€ Inc VAT
700mm Side panel	672mm-690mm	58.405	299.00	**367.77**
760mm Side panel	732mm-750mm	58.406	307.00	**377.61**
800mm Side panel	772mm-790mm	58.407	321.00	**394.83**
900mm Side panel	872mm-890mm	58.408	345.00	**424.35**
1000mm Side panel	972mm-990mm	58.409	376.00	**462.48**

EXTRAS

Volente Extension Profile*

Description	Code	€ Ex VAT	€ Inc VAT
31mm Extension profile	58.012	86.00	**105.78**

*Adds 31mm to overall size of door to give greater adjustment, can only be used with door, not on side panel.

Volente

VOLENTE SLIDER DOOR





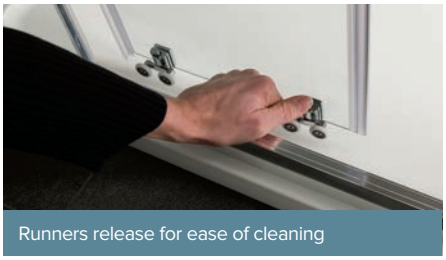

Runners release for ease of cleaning

Luxurious, easy to clean, contemporary framed enclosure in 6mm tempered safety glass, 1850mm high.

FEATURES

- 10 Year manufacturer's guarantee*
- Easy clean glass
- Concealed fittings
- Trays available to match
- Power shower approved
- 3 side installation possible
- 6mm Tempered safety glass
- Clear glass - also available in frosted glass
- Polished Chrome

When fitting with 2 side panels (as illustrated) you will need to select the next smallest door size from your selected tray. For example: for a 900mm tray you will need an 800mm door. If the difference between the tray and the door is 100mm you will also need TWO extension profiles. Please call 01452 317890 for assistance if you are in any doubt.

DOORS

Volente Slider Door - Clear Glass

Size	Adjustment	Door Opening	Code	€ Ex VAT	€ Inc VAT
1000mm slider	970mm-1000mm	340mm	58.204	588.00	**723.24**
1100mm slider	1070mm-1100mm	450mm	58.205	612.00	**752.76**
1200mm slider	1170mm-1200mm	490mm	58.206	654.00	**804.42**
1300mm slider	1270mm-1300mm	550mm	58.200	674.00	**829.02**
1400mm slider	1370mm-1400mm	570mm	58.207	716.00	**880.68**
1500mm slider	1470mm-1500mm	650mm	58.201	742.00	**912.66**
1600mm slider	1570mm-1600mm	700mm	58.202	782.00	**961.86**
1700mm slider	1670mm-1700mm	750mm	58.203	808.00	**993.84**
1800mm slider	1770mm-1800mm	800mm	58.208	846.00	**1040.58**
2000mm slider	1970mm-2000mm	875mm	58.209	884.00	**1087.32**

Adjustment varies when fitted with a side panel.

EXTRAS

Volente Side Panel - Clear Glass

Size	Adjustment	Code	€ Ex VAT	€ Inc VAT
700mm Side panel	672mm-690mm	58.405	299.00	**367.77**
760mm Side panel	732mm-750mm	58.406	307.00	**377.61**
800mm Side panel	772mm-790mm	58.407	321.00	**394.83**
900mm Side panel	872mm-890mm	58.408	345.00	**424.35**
1000mm Side panel	972mm-990mm	58.409	376.00	**462.48**

EXTRAS

Volente Extension Profile*

Description	Code	€ Ex VAT	€ Inc VAT
31mm Extension profile	58.012	86.00	**105.78**

*Adds 31mm to overall size of door to give greater adjustment, can only be used with door, not on side panel.

Volente

VOLENTE FROSTED SLIDER DOOR

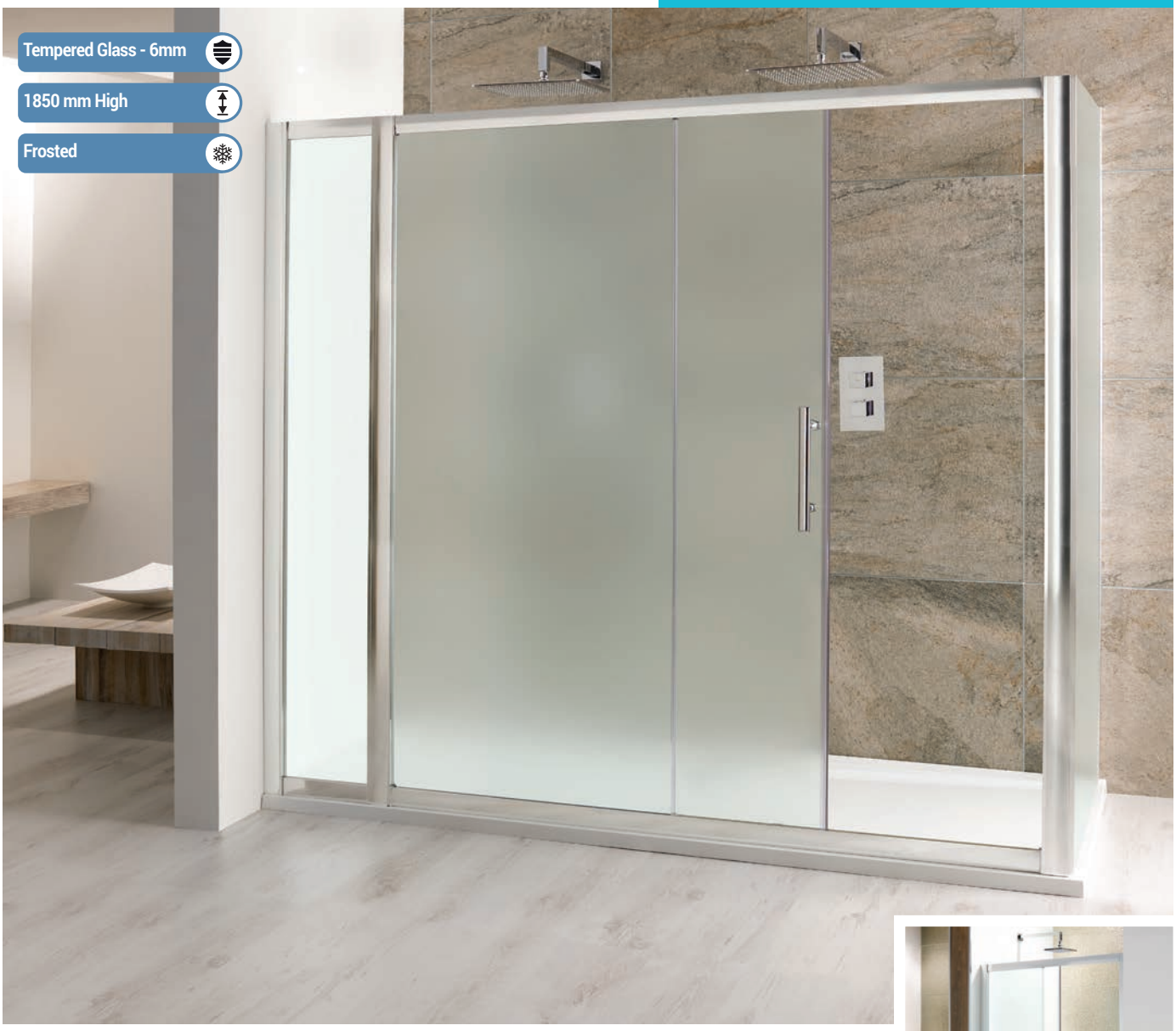





DOORS

Volente Slider Door - Frosted Glass

Size	Adjustment	Door Opening	Code	€ Ex VAT	€ Inc VAT
1000mm slider	970mm-1000mm	340mm	58.014	674.00	**829.02**
1100mm slider	1070mm-1100mm	450mm	58.015	707.00	**869.61**
1200mm slider	1170mm-1200mm	490mm	58.016	755.00	**928.65**
1300mm slider	1270mm-1300mm	550mm	58.017	793.00	**975.39**
1400mm slider	1370mm-1400mm	570mm	58.018	835.00	**1027.05**
1500mm slider	1470mm-1500mm	650mm	58.019	870.00	**1070.10**
1600mm slider	1570mm-1600mm	700mm	58.020	912.00	**1121.76**
1700mm slider	1670mm-1700mm	750mm	58.021	947.00	**1164.81**
1800mm slider	1770mm-1800mm	800mm	58.022	993.00	**1221.39**
2000mm slider	1970mm-2000mm	875mm	58.023	1069.00	**1314.87**

Adjustment varies when fitted with a side panel.

EXTRAS

Volente Side Panel - Frosted Glass

Size	Adjustment	Code	€ Ex VAT	€ Inc VAT
700mm Side panel	672mm-690mm	58.024	345.00	**424.35**
760mm Side panel	732mm-750mm	58.025	363.00	**446.49**
800mm Side panel	772mm-790mm	58.026	380.00	**467.40**
900mm Side panel	872mm-890mm	58.027	406.00	**499.38**
1000mm Side panel	972mm-990mm	58.028	441.00	**542.43**

EXTRAS

Volente In-Line Panel - Frosted Glass

Size	Adjustment	Code	€ Ex VAT	€ Inc VAT
300mm in-line panel	300-325	58.042	307.00	**377.61**
300mm in-line panel with shelves	300-325	58.043	349.00	**429.27**
Volente inline panel support bar	-	58.013	58.00	**71.34**

Volente

VOLENTE SLIDER WITH IN-LINE PANEL



Volente

VOLENTE SLIDER WITH IN-LINE PANEL

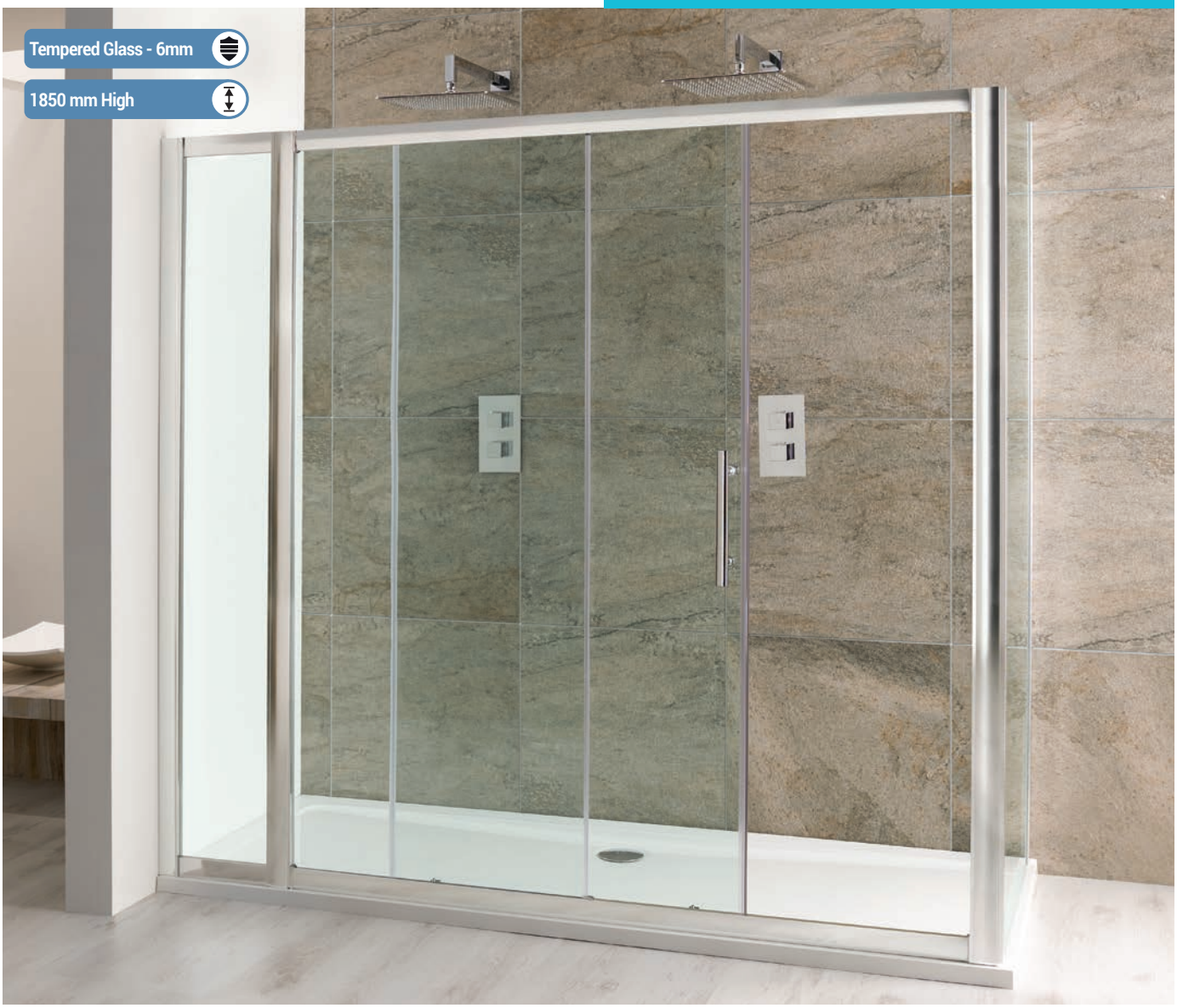

DOORS

Volente Slider with In-Line Panel

Size	Adjustment	Door Opening	Code	€ Ex VAT	€ Inc VAT
1000mm slider	970mm-1000mm	340mm	58.204	588.00	**723.24**
1100mm slider	1070mm-1100mm	450mm	58.205	612.00	**752.76**
1200mm slider	1170mm-1200mm	490mm	58.206	654.00	**804.42**
1400mm slider	1370mm-1400mm	570mm	58.207	716.00	**880.68**
1700mm slider	1670mm-1700mm	750mm	58.203	808.00	**993.84**

N.B. Volente in-line panel sold separately. Sizes restricted to tray sizes available.
Adjustment varies when fitted with a side panel.

EXTRAS

Volente Side Panel

Size	Adjustment	Code	€ Ex VAT	€ Inc VAT
700mm Side panel	672mm-690mm	58.405	299.00	**367.77**
760mm Side panel	732mm-750mm	58.406	307.00	**377.61**
800mm Side panel	772mm-790mm	58.407	321.00	**394.83**
900mm Side panel	872mm-890mm	58.408	345.00	**424.35**
1000mm Side panel	972mm-990mm	58.409	376.00	**462.48**

Volente in-Line Panel

Size	Adjustment	Code	€ Ex VAT	€ Inc VAT
300mm in-line panel	300mm-325mm	58.010	315.00	**387.45**
300mm in-line panel with shelves	300mm-325mm	58.011	355.00	**436.65**
Volente in-line panel support bar	-	58.013	58.00	**71.34**

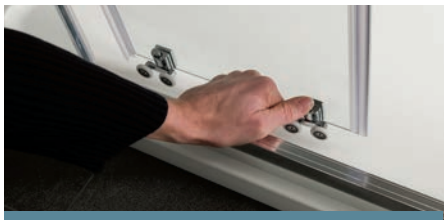

Runners release for ease of cleaning

Luxurious, easy to clean, contemporary framed enclosure in 6mm tempered safety glass, 1850mm high, shown with in-line panel with optional shelves.

FEATURES

- 10 Year manufacturer's guarantee*
- Easy clean glass
- Concealed fittings
- Trays available to match
- Power shower approved
- 6mm Tempered safety glass
- Polished Chrome

*With conditions

Volente

VOLENTE QUAD





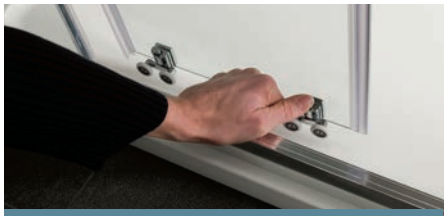

Runners release for ease of cleaning

Luxurious, easy to clean, contemporary framed enclosure in 6mm tempered safety glass, height 1850mm.

FEATURES

- 10 Year manufacturer's guarantee*
- Easy clean glass
- Concealed fittings
- Trays available to match
- Power shower approved
- 6mm Tempered safety glass
- Polished Chrome

*With conditions

DOORS

Volente Quad

Size	Adjustment	Door Opening	Code	€ Ex VAT	€ Inc VAT
800mm	767mm-790mm	470mm	58.003	670.00	**824.10**
900mm	867mm-890mm	470mm	58.004	670.00	**824.10**
1000mm	967mm-990mm	540mm	58.006	797.00	**980.31**

EXTRAS

Volente Extension Profile*

Description	Code	€ Ex VAT	€ Inc VAT
31mm Extension profile	58.012	86.00	**105.78**

*Adds 31mm to overall size of door to give greater adjustment, can only be used with door, not on side panel.

Volente

VOLENTE QUAD WITH INLINE PANEL

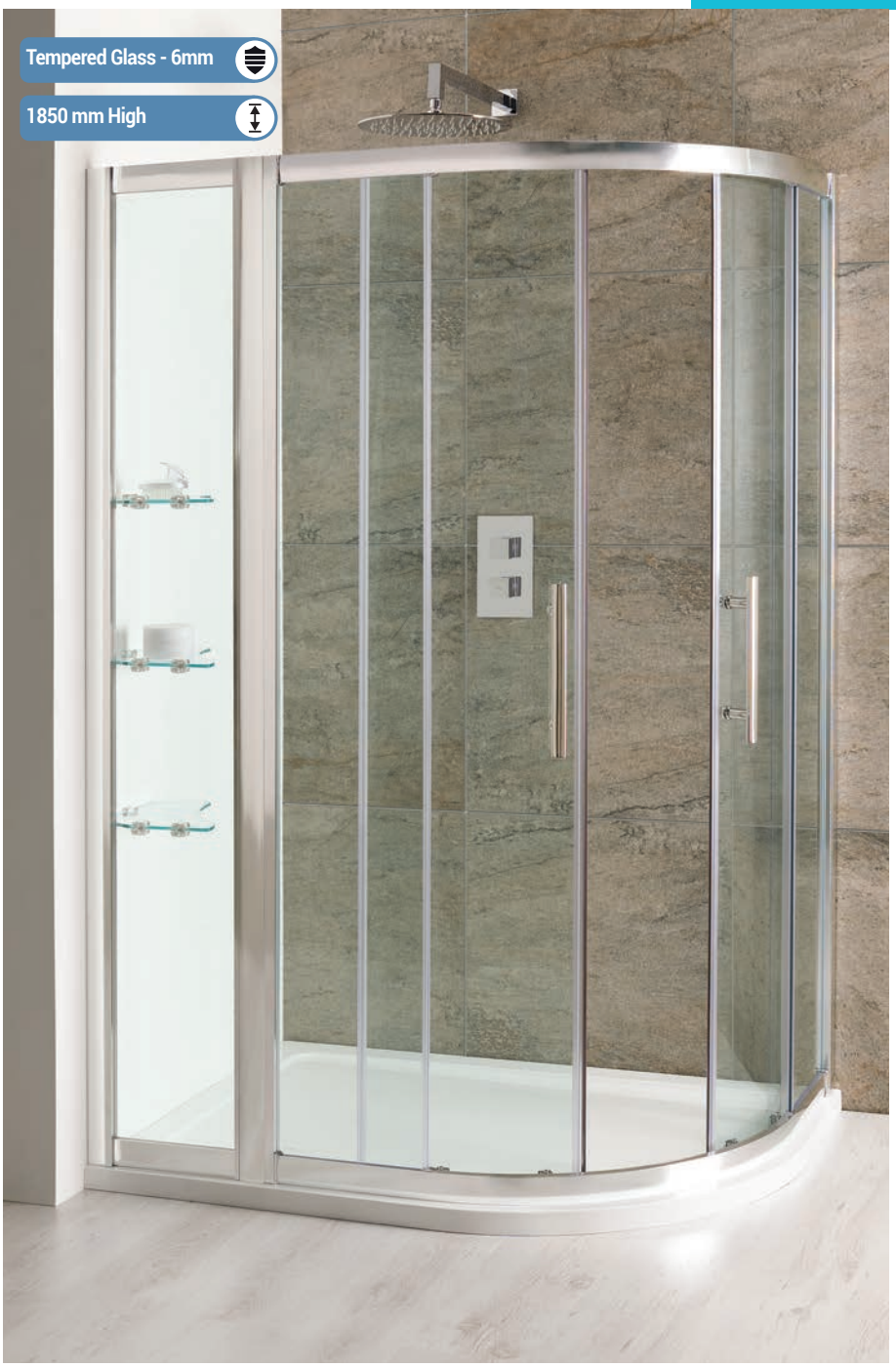



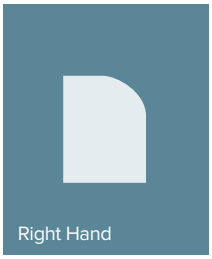



Luxurious, easy to clean, contemporary framed enclosure in 6mm tempered safety glass, 1850mm high.

FEATURES

- 10 Year manufacturer's guarantee*
- Easy clean glass
- Concealed fittings
- Trays available to match
- Power shower approved
- 6mm Tempered safety glass
- Polished Chrome

*With conditions

DOORS

Volente Quad

Size	Adjustment	Door Opening	Code	€ Ex VAT	€ Inc VAT
800mm	767mm-790mm	470mm	58.003	670.00	**824.10**
900mm	867mm-890mm	470mm	58.004	670.00	**824.10**

EXTRAS

Volente In-Line Panel

Description		Code	€ Ex VAT	€ Inc VAT
300mm in-line panel	300mm-325mm	58.010	315.00	**387.45**
300mm in-line panel with shelves	300mm-325mm	58.011	355.00	**436.65**
Volente inline panel support bar	-	58.013	58.00	**71.34**

N.B. Volente in-line panel sold separately, sizes restricted to tray sizes available.

Volente

VOLENTE CURVED CORNER



Right Hand Shown

NB. Must order both 58.600 and 58.601 as both door and panel required to make enclosure.

DOORS

Volente Curved Corner

Size	Adjustment	Door Opening	Code	€ Ex VAT	€ Inc VAT
1200 x 800mm curved corner door**	782-800mm	760mm	58.600	534.00	**656.82**
1200 x 800mm curved corner panel**	1180-1200mm	-	58.601	665.00	**817.95**

** NB. Must order both 58.600 and 58.601 as both door and panel required to make enclosure.
See Extras section below for trays to match.

EXTRAS

Volente Curved Corner

Description	Code	€ Ex VAT	€ Inc VAT
1200 x 800mm tray LH*	158.602	425.00	**522.75**
1200 x 800mm tray RH*	158.603	425.00	**522.75**
Legs and panel for 58.602/3	158.604	153.00	**188.19**
90mm Shower Waste	12.040	37.00	**45.51**
Volente Luxury Shower Waste Chrome	41.5000	44.00	**54.12**

* Price does not include shower waste (12.040 or 41.5000). 90mm shower waste required.

Luxurious, easy to clean, contemporary framed enclosure in 6mm tempered safety glass, height 1850mm.

FEATURES

- 10 Year manufacturer's guarantee*
- Easy clean glass
- Concealed fittings
- Trays available to match
- 6mm Tempered safety glass
- Polished Chrome

*With conditions

Volente



VOLENTE OFFSET QUAD



Runners release for ease of cleaning

Luxurious, easy to clean, contemporary framed enclosure in 6mm tempered safety glass, height 1850mm.

FEATURES

- 10 Year manufacturer's guarantee*
- Easy clean glass
- Concealed fittings
- Trays available to match
- Power shower approved
- 6mm Tempered safety glass
- Polished Chrome

*With conditions

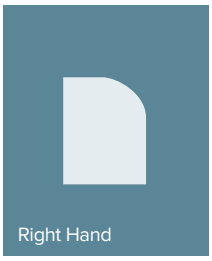



Offset Quadrant reversible left hand or right hand.

DOORS

Volente Offset Quad

Size	Adjustment	Door Opening	Code	€ Ex VAT	€ Inc VAT
900 x 700mm	867-890/667-690mm	360mm	58.049	752.00	**924.96**
1000 x 700mm	967-990/667-690mm	360mm	58.123	776.00	**954.48**
1000 x 800 mm	967-990/767-790mm	470mm	58.107	797.00	**980.31**
1000 x 900 mm	967-990/767-790mm	540mm	58.108	797.00	**980.31**
1100 x 700 mm	1067-1090/667-690mm	360mm	58.124	815.00	**1002.45**
1100 x 760 mm	1067-1090/727-750mm	480mm	58.109	842.00	**1035.66**
1100 x 800 mm	1067-1090/767-790mm	480mm	58.120	815.00	**1002.45**
1100 x 900 mm	1067-1090/867-890mm	540mm	58.121	815.00	**1002.45**
1200 x 700 mm	1167-1190/667-690mm	360mm	58.122	857.00	**1054.11**
1200 x 800 mm	1167-1190/767-790mm	470mm	58.105	874.00	**1075.02**
1200 x 900 mm	1167-1190/787-790mm	540mm	58.106	874.00	**1075.02**
1300 x 760 mm	1267-1290/727-790mm	480mm	58.125	899.00	**1105.77**
1300 x 800 mm	1267-1290/767-799mm	480mm	58.126	899.00	**1105.77**
1400 x 760 mm	1367-1390/727-790mm	480mm	58.127	937.00	**1152.51**
1400 x 800 mm	1367-1390/767-790mm	480mm	58.128	937.00	**1152.51**

EXTRAS

Volente Extension Profile*

Description	Code	€ Ex VAT	€ Inc VAT
31mm Extension profile	58.012	86.00	**105.78**

Volente Extension Profile - Adds 31mm to overall size of door to give greater adjustment.

Volente

VOLENTE SINGLE DOOR QUAD



DOORS

Volente Single Door Quad

Size	Adjustment	Door Opening	Code	€ Ex VAT	€ Inc VAT
800mm door	767-782mm	450mm	58.007*	499.00	**613.77**
900mm door	862-882mm	550mm	58.008*	499.00	**613.77**
1000mm door	962-982mm	600mm	58.009*	744.00	**915.12**

*Requires special tray - see below for matching trays and Legs & Panels.

TRAYS TO MATCH

Bow Fronted Trays to match Volente Single Door Quad

Size	Waste Size	A	B	C	D	E	F	H	Code	€ Ex VAT	€ Inc VAT
800 x 800*	90	800	800	40	65	190	190	598	158.618	369.00	**453.87**
900 x 900*	90	900	900	40	65	190	190	673	158.619	374.00	**460.02**
1000 x 1000*	90	1000	1000	40	65	190	190	748	158.620	405.00	**498.15**

*Price does not include shower waste

EXTRAS

Description	Code	€ Ex VAT	€ Inc VAT
Volente legs & panel for 158.618 tray	158.621	167.00	**205.41**
Volente legs & panel for 158.619 tray	158.622	170.00	**209.10**
Volente legs & panel for 158.620 tray	158.623	177.00	**217.71**
90mm Shower Waste Chrome	12.040	37.00	**45.51**

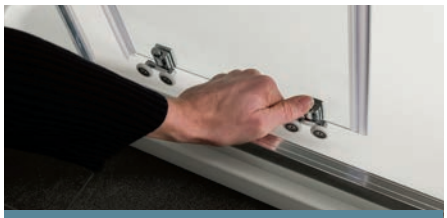

Runners release for ease of cleaning

Luxurious, easy to clean, contemporary framed enclosure in 6mm tempered safety glass, height 1850mm.

FEATURES

- 10 Year manufacturer's guarantee*
- Easy clean glass
- Concealed fittings
- Trays available to match
- Power shower approved
- 6mm Tempered safety glass
- Polished Chrome

*With conditions

Volente

VOLENTE SINGLE DOOR OFFSET QUAD



● Door handle - position when closed. Only available opening as shown. Position of large panel may vary depending on size of enclosure. Enclosure can be fitted on left or right handed tray.

Right Hand

Left Hand

Runners release for ease of cleaning

1200 x 900mm enclosure shown in left hand.

DOORS

Volente Single Door Offset Quad

Size	Adjustment	Door Opening	Code	€ Ex VAT	€ Inc VAT
900 x 760mm door	870-893 x 730-753	420mm	58.110	727.00	**894.21**
900 x 800mm door	870-893 x 770-793	440mm	58.111	727.00	**894.21**
1000 x 760mm door	970-993 x 730-753	420mm	58.112	866.00	**1065.18**
1000 x 800mm door	970-993 x 770-793	440mm	58.113	866.00	**1065.18**
1000 x 900mm door	970-993 x 870-893	470mm	58.114	866.00	**1065.18**
1200 x 760mm door	1170-1193 x 730-753	420mm	58.115	948.00	**1166.04**
1200 x 800mm door	1170-1193 x 770-793	440mm	58.116	948.00	**1166.04**
1200 x 900mm door	1170-1193 x 870-893	470mm	58.117	948.00	**1166.04**

Note: 550mm radius on tray.

Luxurious, easy to clean, contemporary framed enclosure in 6mm tempered safety glass, height 1850mm.

FEATURES

- 10 Year manufacturer's guarantee*
- Easy clean glass
- Concealed fittings
- Trays available to match
- Power shower approved
- 6mm Tempered safety glass
- Polished Chrome

*With conditions

Volente

VOLENTE SPACESAVER QUAD



All diagrams shown are left hand

Note
During the life of this brochure, the design of these trays will change. When ordering, please check you have ordered the correct waste.

Volente

VOLENTE SPACESAVER QUAD



DOORS

Volente Spacesaver Offset Quad

Size	Door Opening	Code	€ Ex VAT	€ Inc VAT
1000 x 850/650	560mm	58.104	693.00	**852.39**
1200 x 880/700	520mm	58.100	769.00	**945.87**
1650 x 912/700	500mm	58.101	982.00	**1207.86**

EXTRAS

TRAYS

Description	Code	€ Ex VAT	€ Inc VAT
LH Tray for 58.104*	158.730	237.00	**291.51**
RH Tray for 58.104*	158.731	237.00	**291.51**
LH Tray for 58.100*	158.732	262.00	**322.26**
RH Tray for 58.100*	158.734	262.00	**322.26**
LH Tray for 58.101*	158.735	399.00	**490.77**
RH Tray for 58.101*	158.736	399.00	**490.77**
50mm Shower Waste	158.737	30.00	**36.90**

*Must be fitted with 158.737



Right hand shown, 1000 x 850/650mm

Luxurious, easy to clean, contemporary framed enclosure with a unique space saving shape allowing it to fit into smaller spaces but still providing luxurious room to shower.

FEATURES

- 10 Year manufacturer's guarantee*
- Easy clean glass
- Integral waste
- Trays available to match
- Power shower approved
- 6mm Tempered safety glass
- 1850 mm high
- Polished Chrome
- Integral waste

*With conditions

Volente

VOLENTE HINGED DOOR





In-line panel must be fitted to hinge side of the door as illustrated, and fitted with a 58.013 support bar.

Luxurious, easy to clean, contemporary framed enclosure in 6mm tempered safety glass, height 1850mm.

FEATURES

- 10 Year manufacturer's guarantee*
- Easy clean glass
- Concealed fittings
- Trays available to match
- 6mm Tempered safety glass
- Clear glass - also available in frosted glass
- Polished Chrome

*With conditions

DOORS

Volente Hinged Door - Clear Glass

Size	Adjustment	Door Opening	Code	€ Ex VAT	€ Inc VAT
700mm door	660mm-700mm	560mm	58.305	593.00	**729.39**
760mm door	720mm-760mm	620mm	58.306	607.00	**746.61**
800mm door	760mm-800mm	660mm	58.307	622.00	**765.06**
900mm door	860mm-900mm	760mm	58.308	663.00	**815.49**
1000mm door	960mm-1000mm	860mm	58.309	716.00	**880.68**

Adjustment varies when fitted with a side panel.

EXTRAS

Volente Side Panel - Clear Glass

Size	Adjustment	Code	€ Ex VAT	€ Inc VAT
700mm Side panel	672mm-690mm	58.405	299.00	**367.77**
760mm Side panel	732mm-750mm	58.406	307.00	**377.61**
800mm Side panel	772mm-790mm	58.407	321.00	**394.83**
900mm Side panel	872mm-890mm	58.408	345.00	**424.35**
1000mm Side panel	972mm-990mm	58.409	376.00	**462.48**

EXTRAS

Volente in-Line Panel

Size	Adjustment	Code	€ Ex VAT	€ Inc VAT
300mm in-line panel*	300mm-325mm	58.010	315.00	**387.45**
300mm in-line panel with shelves*	300mm-325mm	58.011	355.00	**436.65**
Volente in-line panel support bar	-	58.013	58.00	**71.34**

*Must be fitted with a 58.013 support bar

EXTRAS

Volente Extension Profile*

Description	Code	€ Ex VAT	€ Inc VAT
31mm Extension profile	58.012	86.00	**105.78**

*Adds 31mm to overall size of door to give greater adjustment, can only be used with door, not on side panel.

Volente

VOLENTE FROSTED HINGED DOOR





Luxurious, easy to clean, contemporary framed enclosure in 6mm tempered safety glass, height 1850mm.

FEATURES

- 10 Year manufacturer's guarantee*
- Easy clean glass
- Concealed fittings
- Trays available to match
- 6mm Tempered safety glass
- Frosted glass - also available in clear glass
- Polished Chrome

*With conditions

DOORS

Volente Hinged Door - Frosted Glass

Size	Adjustment	Door Opening	Code	€ Ex VAT	€ Inc VAT
700mm door	660mm-700mm	560mm	58.037	674.00	**829.02**
760mm door	720mm-760mm	620mm	58.038	696.00	**856.08**
800mm door	760mm-800mm	660mm	58.039	712.00	**875.76**
900mm door	860mm-900mm	760mm	58.040	766.00	**942.18**
1000mm door	960mm-1000mm	860mm	58.041	822.00	**1011.06**

Adjustment varies when fitted with a side panel.

EXTRAS

Volente Side Panel - Frosted Glass

Size	Adjustment	Code	€ Ex VAT	€ Inc VAT
700mm Side panel	672mm-690mm	58.024	345.00	**424.35**
760mm Side panel	732mm-750mm	58.025	363.00	**446.49**
800mm Side panel	772mm-790mm	58.026	380.00	**467.40**
900mm Side panel	872mm-890mm	58.027	406.00	**499.38**
1000mm Side panel	972mm-990mm	58.028	441.00	**542.43**

EXTRAS

Volente In-Line Panel - Frosted Glass

Size	Adjustment	Code	€ Ex VAT	€ Inc VAT
300mm in-line panel*	300-325	58.042	307.00	**377.61**
300mm in-line panel with shelves*	300-325	58.043	349.00	**429.27**
Volente Inline Panel Support Bar	-	58.013	58.00	**71.34**

*Must be fitted with a 58.013 support bar

Volente

VOLENTE BI-FOLD DOOR





Luxurious, easy to clean, contemporary framed enclosure in 6mm tempered safety glass, height 1850mm.

FEATURES

- 10 Year manufacturer's guarantee*
- Easy clean glass
- Concealed fittings
- Trays available to match
- 3 side installation possible
- 6mm Tempered safety glass
- Polished Chrome

*With conditions

When fitting with 2 side panels (as illustrated above) you will need to select the next smallest door size from your selected tray. For example: for a 900mm tray you will need an 800mm door. If the difference between the tray and the door is 100mm you will also need TWO extension profiles. Please call 01452 317890 for assistance if you are in any doubt.

DOORS

Volente Bi-Fold Door

Size	Adjustment	Door Opening	Code	€ Ex VAT	€ Inc VAT
700mm door	654mm-700mm	480mm	58.501	528.00	**649.44**
760mm door	714mm-760mm	520mm	58.502	545.00	**670.35**
800mm door	754mm-800mm	580mm	58.503	562.00	**691.26**
900mm door	854mm-900mm	650mm	58.504	581.00	**714.63**
1000mm door	954mm-1000mm	720mm	58.505	612.00	**752.76**

Adjustment varies when fitted with a side panel.

EXTRAS

Volente Side Panel

Size	Adjustment	Code	€ Ex VAT	€ Inc VAT
700mm Side panel	672mm-690mm	58.405	299.00	**367.77**
760mm Side panel	732mm-750mm	58.406	307.00	**377.61**
800mm Side panel	772mm-790mm	58.407	321.00	**394.83**
900mm Side panel	872mm-890mm	58.408	345.00	**424.35**
1000mm Side panel	972mm-990mm	58.409	376.00	**462.48**

Volente Extension Profile*

Description	Code	€ Ex VAT	€ Inc VAT
31mm Extension profile	58.012	86.00	**105.78**

*Adds 31mm to overall size of door to give greater adjustment, can only be used with door, not on side panel.

Volente

VOLENTE BI-FOLD DOOR WITH IN-LINE PANEL



In-line panel must be fitted to hinge side of the door as illustrated.



Luxurious, easy to clean, contemporary framed enclosure in 6mm tempered safety glass, height 1850mm, shown here with inline panel which is sold separately.

FEATURES

- 10 Year manufacturer's guarantee*
- Easy clean glass
- Concealed fittings
- Trays available to match
- 6mm Tempered safety glass
- Polished Chrome

*With conditions

DOORS

Volente Bi-Fold Door

Size	Adjustment	Door Opening	Code	€ Ex VAT	€ Inc VAT
700mm door	654mm-700mm	480mm	58.501	528.00	**649.44**
760mm door	714mm-760mm	520mm	58.502	545.00	**670.35**
800mm door	754mm-800mm	580mm	58.503	562.00	**691.26**
900mm door	854mm-900mm	650mm	58.504	581.00	**714.63**
1000mm door	954mm-1000mm	720mm	58.505	612.00	**752.76**

*N.B. Volente in-line panel sold separately, sizes restricted to tray sizes available.
Adjustment varies when fitted with a side panel.

EXTRAS

Volente Side Panel

Size	Adjustment	Code	€ Ex VAT	€ Inc VAT
700mm Side panel	672mm-690mm	58.405	299.00	**367.77**
760mm Side panel	732mm-750mm	58.406	307.00	**377.61**
800mm Side panel	772mm-790mm	58.407	321.00	**394.83**
900mm Side panel	872mm-890mm	58.408	345.00	**424.35**
1000mm Side panel	972mm-990mm	58.409	376.00	**462.48**

Volente in-Line Panel

Size	Adjustment	Code	€ Ex VAT	€ Inc VAT
300mm in-line panel	300mm-325mm	58.010	315.00	**387.45**
300mm in-line panel with shelves	300mm-325mm	58.011	355.00	**436.65**
Volente in-line panel support bar	-	58.013	58.00	**71.34**

Volente

VOLENTE DOUBLE HINGE DOOR

Tempered Glass - 6mm

1850 mm High

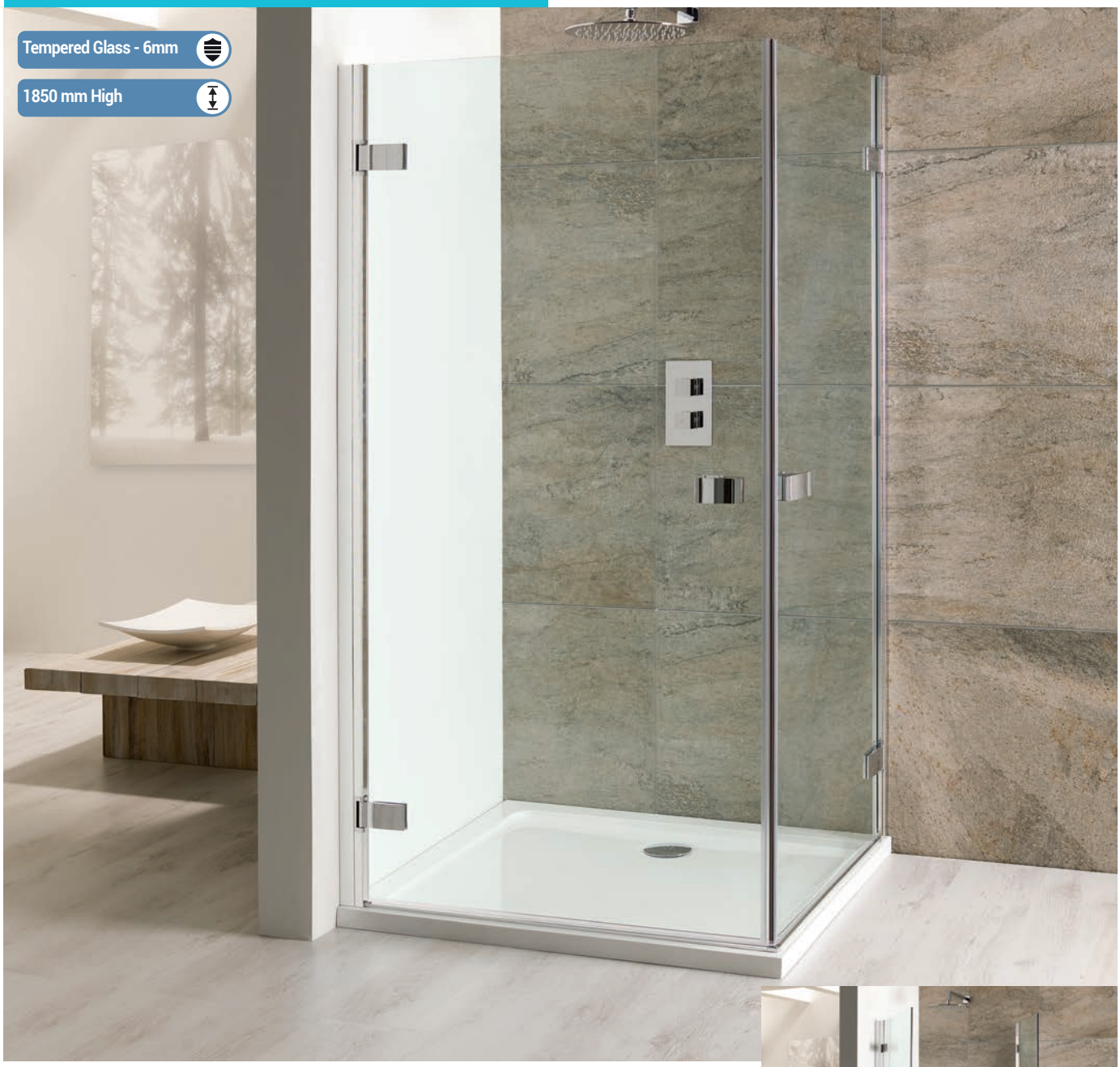



Luxurious, easy to clean, contemporary framed enclosure in 6mm tempered safety glass, height 1850mm.

FEATURES

- 10 Year manufacturer's guarantee*
- Easy clean glass
- Concealed fittings
- Trays available to match
- 6mm Tempered safety glass
- Polished Chrome

*With conditions

DOORS

Volente Double Hinge Door

Size	Adjustment	Door Opening	Code	€ Ex VAT	€ Inc VAT
800 x 800mm door	772-795mm	660 x 660mm	58.801	1101.00	**1354.23**
900 x 760mm door	872-895 x 732-755mm	760 x 620mm	58.809	1118.00	**1375.14**
900 x 800mm door	872-895 x 772-795mm	760 x 660mm	58.804	1143.00	**1405.89**
900 x 900mm door	872-895 x 872-895mm	760 x 760mm	58.802	1143.00	**1405.89**
1000 x 760mm door	972-995 x 732-755mm	860 x 620mm	58.810	1143.00	**1405.89**
1000 x 800mm door	972-995 x 772-795mm	860 x 660mm	58.807	1143.00	**1405.89**
1000 x 900mm door	972-995 x 872-895mm	860 x 760mm	58.808	1155.00	**1420.65**
1000 x 1000mm door	972-995 x 972-995mm	860 x 860mm	58.803	1182.00	**1453.86**
1200 x 800mm door	1172-1195 x 772-795mm	1060 x 660mm	58.805	1182.00	**1453.86**
1200 x 900mm door	1172-1195 x 872-895mm	1060 x 760mm	58.806	1196.00	**1471.08**

EXTRAS

Volente Extension Profile*

Description	Code	€ Ex VAT	€ Inc VAT
31mm Extension profile	58.012	86.00	**105.78**

*Adds 31mm to overall size of door to give greater adjustment, can only be used with door, not on side panel.

Vulcan

VULCAN QUAD



An affordable, classic design enclosure with 5mm tempered safety glass, 1850mm height and quick release rollers.

FEATURES

- 10 Year manufacturer's guarantee*
- 5mm Tempered safety glass
- Polished Chrome

*With conditions

DOORS

Vulcan Quad

Size	Adjustment	Door Opening	Code	€ Ex VAT	€ Inc VAT
800 Quad	780 x 800mm	410mm	69.0001	507.00	**623.61**
900 Quad	880 x 900mm	510mm	69.0002	534.00	**656.82**

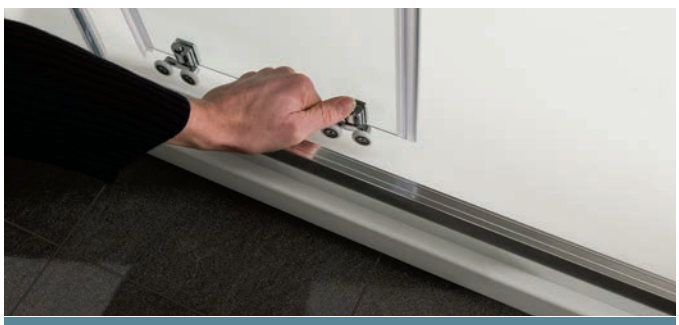

Runners release for ease of cleaning

Vulcan

VULCAN HINGE DOOR



DOORS

Vulcan Hinge Door

Size	Adjustment	Door Opening	Code	€ Ex VAT	€ Inc VAT
700mm door	680mm - 700mm	535mm	69.0003	381.00	**468.63**
760mm door	740mm - 760mm	595mm	69.0004	392.00	**482.16**
800mm door	780mm - 800mm	635mm	69.0005	399.00	**490.77**
900mm door	880mm - 900mm	735mm	69.0006	427.00	**525.21**
1000mm door	980mm - 1000mm	835mm	69.0007	440.00	**541.20**

Adjustment varies when fitted with a side panel.

EXTRAS

Vulcan Side Panel

Size	Adjustment	Code	€ Ex VAT	€ Inc VAT
700mm side panel	660mm - 700mm	69.0008	227.00	**279.21**
760mm side panel	720mm - 760mm	69.0010	234.00	**287.82**
800mm side panel	760mm - 800mm	69.0011	240.00	**295.20**
900mm side panel	860mm - 900mm	69.0012	257.00	**316.11**
1000mm side panel	960mm - 1000mm	69.0013	271.00	**333.33**



An affordable, classic design enclosure with 5mm tempered safety glass, 1850mm height.

FEATURES

- 10 Year manufacturer's guarantee*
- 5mm Tempered safety glass
- Polished Chrome

*With conditions

Vulcan

VULCAN SLIDER DOOR





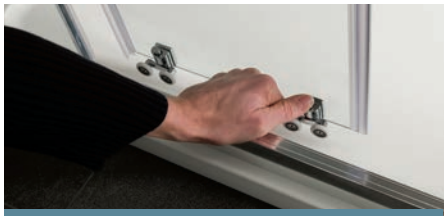

Runners release for ease of cleaning

An affordable, classic design enclosure with 5mm tempered safety glass, 1850mm height and quick release rollers.

FEATURES

- 10 Year manufacturer's guarantee*
- 5mm Tempered safety glass
- Polished Chrome

*With conditions

DOORS

Vulcan Slider Door

Size	Adjustment	Door Opening	Code	€ Ex VAT	€ Inc VAT
1000mm door	980mm - 1000mm	390mm	69.0014	436.00	536.28
1100mm door	1080mm - 1100mm	440mm	69.0015	461.00	567.03
1200mm door	1180mm - 1200mm	490mm	69.0016	471.00	579.33
1300mm door	1280mm - 1300mm	540mm	69.0017	486.00	597.78
1400mm door	1380mm - 1400mm	590mm	69.0018	523.00	643.29
1500mm door	1480mm - 1500mm	640mm	69.0019	535.00	658.05
1600mm door	1580mm - 1600mm	690mm	69.0020	544.00	669.12
1700mm door	1680 mm- 1700mm	690mm	69.0021	576.00	708.48

Adjustment varies when fitted with a side panel.

EXTRAS

Vulcan Side Panel

Size	Adjustment	Code	€ Ex VAT	€ Inc VAT
700mm side panel	660mm - 700mm	69.0008	227.00	**279.21**
760mm side panel	720mm - 760mm	69.0010	234.00	**287.82**
800mm side panel	760mm - 800mm	69.0011	240.00	**295.20**
900mm side panel	860mm - 900mm	69.0012	257.00	**316.11**
1000mm side panel	960mm - 1000mm	69.0013	271.00	**333.33**

Vulcan

VULCAN BI-FOLD DOOR



DOORS

Vulcan Bi-Fold Door

Size	Adjustment	Door Opening	Code	€ Ex VAT	€ Inc VAT
700mm door	680mm - 700mm	430mm	69.0055	381.00	**468.63**
760mm door	740mm - 760mm	480mm	69.0056	392.00	**482.16**
800mm door	780mm - 800mm	515mm	69.0057	399.00	**490.77**
900mm door	880mm - 900mm	590mm	69.0058	419.00	**515.37**

Adjustment varies when fitted with a side panel.

EXTRAS

Vulcan Side Panel

Size	Adjustment	Code	€ Ex VAT	€ Inc VAT
700mm side panel	660mm - 700mm	69.0008	227.00	**279.21**
760mm side panel	720mm - 760mm	69.0010	234.00	**287.82**
800mm side panel	760mm - 800mm	69.0011	240.00	**295.20**
900mm side panel	860mm - 900mm	69.0012	257.00	**316.11**
1000mm side panel	960mm - 1000mm	69.0013	271.00	**333.33**

An affordable, classic design enclosure with 5mm tempered safety glass, 1850mm height and quick release rollers.

FEATURES

- 10 Year manufacturer's guarantee*
- 5mm Tempered safety glass
- Polished Chrome

*With conditions

Vantage

VANTAGE PIVOT DOOR







Vantage pivot door, 6mm tempered safety glass, 1850mm high

FEATURES
- 10 Year manufacturer's guarantee*
- Easy clean glass
- Trays available to match
- Suitable for power shower
- 6mm Tempered safety glass
- Polished Chrome

*With conditions

DOORS

Vantage Pivot Door

Size	Adjustment	Door Opening	Code	€ Ex VAT	€ Inc VAT
700mm door	670mm-695mm	475mm	69.0082	497.00	**611.31**
760mm door	730mm-755mm	535mm	69.0083	514.00	**632.22**
800mm door	770mm-795mm	575mm	69.0084	517.00	**635.91**
900mm door	870mm-895mm	675mm	69.0085	542.00	**666.66**
1000mm door	970mm-995mm	775mm	69.0086	658.00	**809.34**
Adjustment varies when fitted with a side panel.					

EXTRAS

Vantage Side Panel

Size	Adjustment	Code	€ Ex VAT	€ Inc VAT
700mm Side panel	685mm-700mm	69.0092	426.00	**523.98**
760mm Side panel	745mm-760mm	69.0093	436.00	**536.28**
800mm Side panel	785mm-800mm	69.0094	446.00	**548.58**
900mm Side panel	885mm-900mm	69.0095	457.00	**562.11**
1000mm Side panel	985mm-1000mm	69.0100	465.00	**571.95**

Side Panel with Towel Rail

Size	Adjustment	Code	€ Ex VAT	€ Inc VAT
700mm Side panel with rail	685mm-700mm	69.0096	517.00	**635.91**
760mm Side panel with rail	745mm-760mm	69.0097	518.00	**637.14**
800mm Side panel with rail	785mm-800mm	69.0098	521.00	**640.83**
900mm Side panel with rail	885mm-900mm	69.0099	532.00	**654.36**

Vantage

VANTAGE QUADRANT - WHITE



Vantage quadrant, 6mm tempered safety glass, 1850mm high

FEATURES

- 10 Year manufacturer's guarantee*
- Easy clean glass
- Suitable for power showers
- Trays available to match
- 6mm Tempered safety glass
- White finish - also available in Chrome

*With conditions



Runners release for ease of cleaning

DOORS

Vantage Quadrant - White

Size	Adjustment	Door Opening	Colour	Code	€ Ex VAT	€ Inc VAT
800mm	770mm-800mm	420mm	White	69.0022	637.00	**783.51**
900mm	870mm-900mm	520mm	White	69.0023	637.00	**783.51**

Vantage

VANTAGE QUADRANT - CHROME



Vantage quadrant, 6mm tempered glass, 1850mm high

FEATURES

- 10 Year manufacturer's guarantee*
- Easy clean glass
- Suitable for power showers
- Trays available to match
- 6mm Tempered safety glass
- Polished Chrome - also available in white

*With conditions



Runners release for ease of cleaning

DOORS

Vantage Quadrant - Chrome

Size	Adjustment	Door Opening	Colour	Code	€ Ex VAT	€ Inc VAT
800mm	770mm-800mm	420mm	Chrome	69.0024	665.00	**817.95**
900mm	870mm-900mm	520mm	Chrome	69.0025	665.00	**817.95**

Vantage

VANTAGE SLIDING DOOR





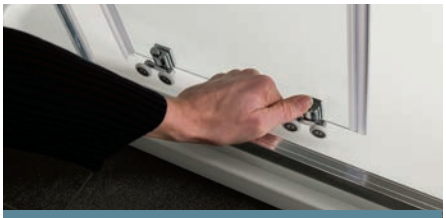

Runners release for ease of cleaning

Vantage sliding door, 6mm tempered glass, 1850mm high.

FEATURES

- 10 Year manufacturer's guarantee*
- Easy clean glass
- Suitable for power showers
- Trays available to match
- 6mm Tempered safety glass
- Polished Chrome

*With conditions

DOORS

Vantage Sliding Door

Size	Adjustment	Door Opening	Code	€ Ex VAT	€ Inc VAT
1000mm door	970mm-1000mm	410mm	69.0069	658.00	**809.34**
1100mm door	1070mm-1100mm	460mm	69.0070	668.00	**821.64**
1200mm door	1170mm-1200mm	510mm	69.0071	688.00	**846.24**
1400mm door	1370mm-1400mm	610mm	69.0072	721.00	**886.83**
1600mm door	1570mm-1600mm	710mm	69.0073	759.00	**933.57**
1650mm door	1620mm-1650mm	735mm	69.260	769.00	**945.87**
1700mm door	1670mm-1700mm	760mm	69.0074	776.00	**954.48**

Adjustment varies when fitted with a side panel

EXTRAS

Vantage Side Panel

Size	Adjustment	Code	€ Ex VAT	€ Inc VAT
700mm Side panel	685mm-700mm	69.0092	426.00	**523.98**
760mm Side panel	745mm-760mm	69.0093	436.00	**536.28**
800mm Side panel	785mm-800mm	69.0094	446.00	**548.58**
900mm Side panel	885mm-900mm	69.0095	457.00	**562.11**
1000mm Side panel	985mm-1000mm	69.0100	465.00	**571.95**

Side Panel with Towel Rail

Size	Adjustment	Code	€ Ex VAT	€ Inc VAT
700mm Side panel with rail	685mm-700mm	69.0096	517.00	**635.91**
760mm Side panel with rail	745mm-760mm	69.0097	518.00	**637.14**
800mm Side panel with rail	785mm-800mm	69.0098	521.00	**640.83**
900mm Side panel with rail	885mm-900mm	69.0099	532.00	**654.36**

Vantage

VANTAGE CORNER ENTRY & OFFSET CORNER ENTRY



Vantage offset corner entry 6mm tempered glass, 1850mm high.

FEATURES

- 10 Year manufacturer's guarantee*
- Easy clean glass
- Suitable for power showers
- Trays available to match
- 6mm Tempered safety glass
- Polished Chrome

*With conditions

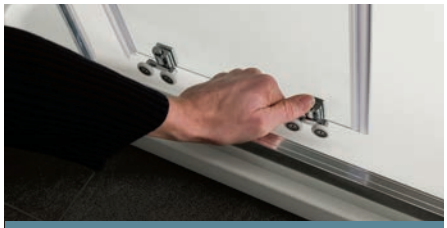

Runners release for ease of cleaning



DOORS

Vantage Corner Entry & Offset Corner Entry

Size	Adjustment	Door Opening	Code	€ Ex VAT	€ Inc VAT
800 x 800mm	770-800 x 770-800	435mm	69.0127	797.00	**980.31**
900 x 700mm	870-900 x 670-700	450mm	69.0165	780.00	**959.40**
900 x 760mm	870-900 x 730-760	470mm	69.0123	866.00	**1065.18**
900 x 800mm	870-900 x 770-800	480mm	69.0124	866.00	**1065.18**
900 x 900mm	870-900 x 870-900	510mm	69.0128	817.00	**1004.91**
1000 x 760mm	970-1000 x 730-760	495mm	69.0125	868.00	**1067.64**
1000 x 800mm	970-1000 x 770-800	505mm	69.0126	878.00	1079.94

Vantage

VANTAGE OFFSET QUADRANT

Tempered Glass - 6mm

1850 mm High

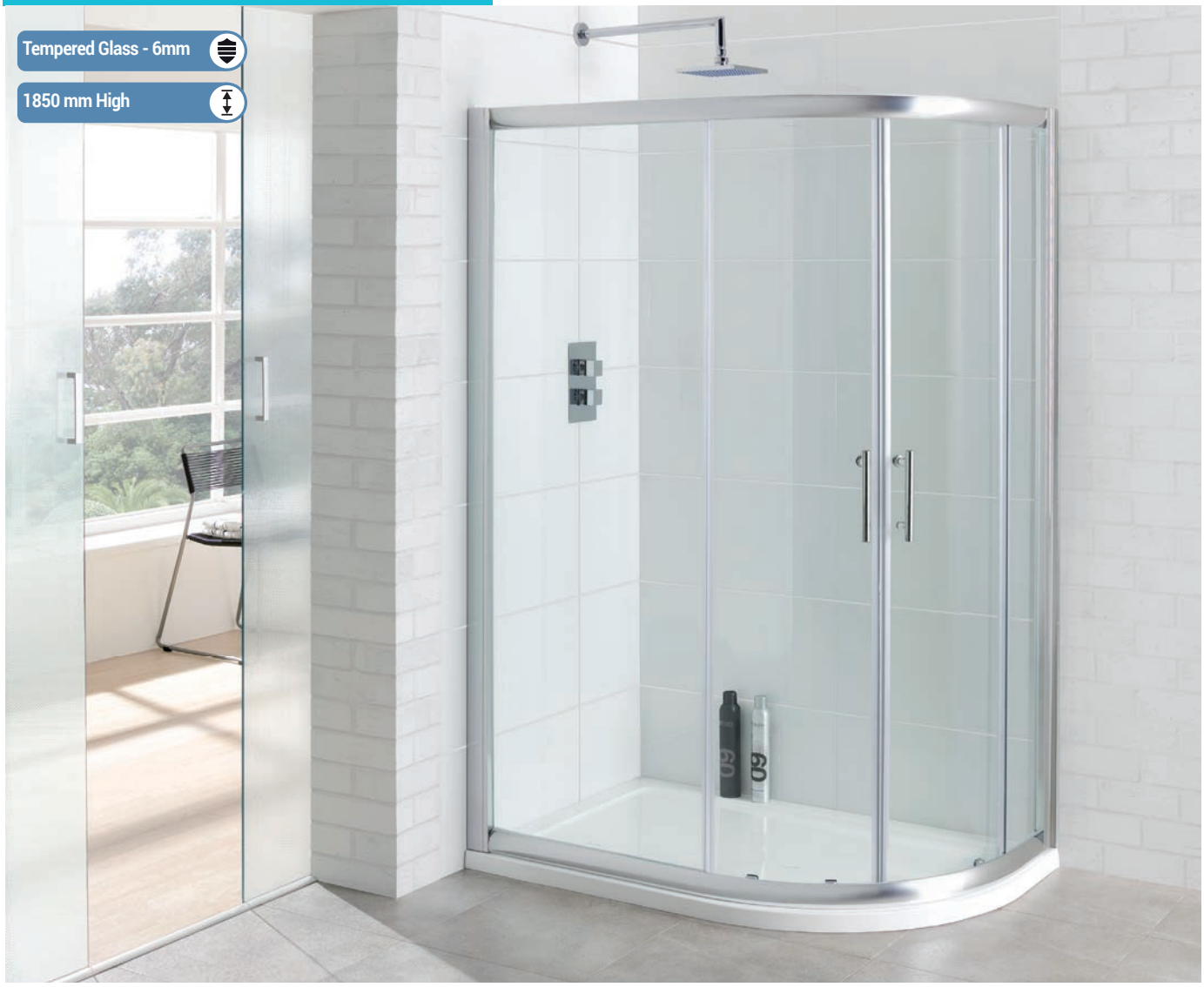

DOORS

Vantage Offset Quadrant

Size	Adjustment	Door Opening	Code	€ Ex VAT	€ Inc VAT
900 x 760mm	870-900mm x 730-760mm	450mm	69.0032	878.00	**1079.94**
900 x 800mm	870-900mm x 770-800mm	470mm	69.0027	761.00	**936.03**
1000 x 760mm	970-1000mm x 730-760mm	450mm	69.0033	930.00	**1143.90**
1000 x 800mm	970-1000mm x 770-800mm	470mm	69.0030	821.00	**1009.83**
1000 x 900mm	970-1000mm x 870-900mm	520mm	69.0031	850.00	**1045.50**
1100 x 760mm	1070-1100mm x 730-760mm	450mm	69.0159	916.00	**1126.68**
1100 x 800mm	1070-1100mm x 770-800mm	470mm	69.0160	937.00	**1152.51**
1100 x 900mm	1070-1100mm x 870-900mm	520mm	69.0161	947.00	**1164.81**
1200 x 760mm	1170-1200mm x 730-760mm	450mm	69.0163	955.00	**1174.65**
1200 x 800mm	1170-1200mm x 770-800mm	470mm	69.0028	854.00	**1050.42**
1200 x 900mm	1170-1200mm x 870-900mm	520mm	69.0029	874.00	**1075.02**
1300 x 760mm	1270-1300mm x 730-760mm	450mm	69.162	877.00	**1078.71**
1300 x 800mm	1270-1300mm x 770-800mm	470mm	69.161	927.00	**1140.21**
1400 x 760mm	1370-1400mm x 730-760mm	450mm	69.164	947.00	**1164.81**
1400 x 800mm	1370-1400mm x 770-800mm	470mm	69.163	996.00	**1225.08**

Offset Quadrant reversible left hand or right hand.
This product requires trays with 550mm radius curve. See pages 441 & 449.

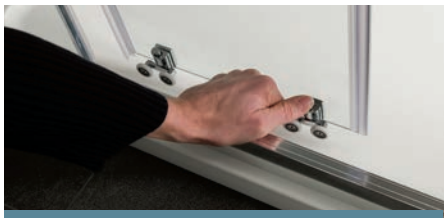

Runners release for ease of cleaning

Vantage offset quadrant, 6mm tempered glass, 1850mm high.

FEATURES

- 10 Year manufacturer's guarantee*
- Easy clean glass
- Suitable for power showers
- Trays available to match
- 6mm Tempered safety glass
- Polished Chrome

*With conditions

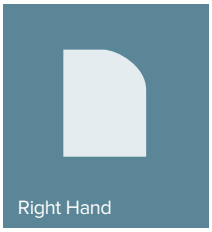

Right Hand



Left Hand

Vantage

VANTAGE BI-FOLD DOOR

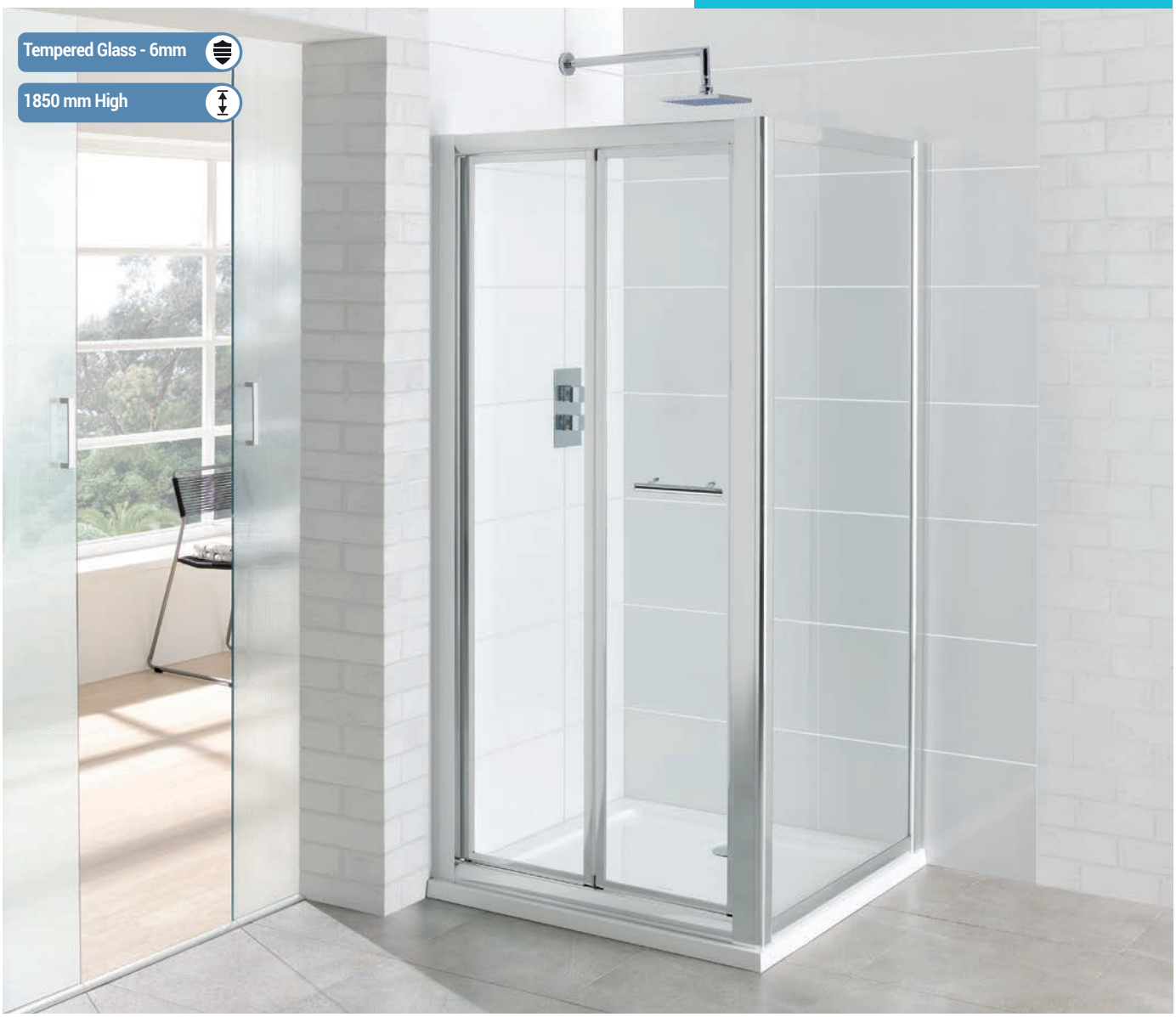

DOORS

Vantage Bi-Fold Door

Size	Adjustment	Door Opening	Code	€ Ex VAT	€ Inc VAT
700mm door	670mm-700mm	395mm	69.0111	733.00	**901.59**
760mm door	730mm-760mm	455mm	69.0112	735.00	**904.05**
800mm door	770mm-800mm	495mm	69.0113	744.00	**915.12**
900mm door	870mm-900mm	595mm	69.0114	752.00	**924.96**
1000mm door	970mm-1000mm	695mm	69.0115	978.00	**1202.94**

Adjustment varies when fitted with a side panel

EXTRAS

Vantage Side Panel

Size	Adjustment	Code	€ Ex VAT	€ Inc VAT
700mm Side panel	685mm-700mm	69.0092	426.00	**523.98**
760mm Side panel	745mm-760mm	69.0093	436.00	**536.28**
800mm Side panel	785mm-800mm	69.0094	446.00	**548.58**
900mm Side panel	885mm-900mm	69.0095	457.00	**562.11**
1000mm Side panel	985mm-1000mm	69.0100	465.00	**571.95**

Side Panel with Towel Rail

Size	Adjustment	Code	€ Ex VAT	€ Inc VAT
700mm Side panel with rail	685mm-700mm	69.0096	517.00	**635.91**
760mm Side panel with rail	745mm-760mm	69.0097	518.00	**637.14**
800mm Side panel with rail	785mm-800mm	69.0098	521.00	**640.83**
900mm Side panel with rail	885mm-900mm	69.0099	532.00	**654.36**



Vantage bi-fold door, 6mm tempered glass, 1850mm high.

FEATURES

- 10 Year manufacturer's guarantee*
- Easy clean glass
- Suitable for power showers
- Trays available to match
- 6mm Tempered safety glass
- Polished Chrome

*With conditions

Vantage 2000

VANTAGE 2000 PIVOT DOOR - MATT BLACK







DOORS

Vantage 2000 Pivot Door - Matt Black

Size	Adjustment	Door Opening	Code	€ Ex VAT	€ Inc VAT
700mm door	640mm-680mm	480mm	49.0018	544.00	**669.12**
760mm door	700mm-740mm	540mm	49.0020	563.00	**692.49**
800mm door	740mm-780mm	580mm	49.0022	574.00	**706.02**
900mm door	840mm-880mm	680mm	49.0024	607.00	**746.61**
1000mm door	940mm-980mm	720mm	49.0026	639.00	**785.97**

Adjustment varies when fitted with a side panel.

EXTRAS

Vantage 2000 Side Panel - Matt Black

Size	Adjustment	Code	€ Ex VAT	€ Inc VAT
700mm side panel	660mm-680mm	49.0028	334.00	**410.82**
760mm side panel	720mm-740mm	49.0030	352.00	**432.96**
800mm side panel	760mm-780mm	49.0032	364.00	**447.72**
900mm side panel	860mm-880mm	49.0034	394.00	**484.62**
1000mm side panel	960mm-980mm	49.0036	423.00	**520.29**

Vantage 2000 Side Panel with Towel Rail - Matt Black

Size	Adjustment	Code	€ Ex VAT	€ Inc VAT
700mm side panel with rail	660mm-680mm	49.0038	357.00	**439.11**
760mm side panel with rail	720mm-740mm	49.0040	374.00	**460.02**
800mm side panel with rail	760mm-780mm	49.0042	385.00	**473.55**
900mm side panel with rail	860mm-880mm	49.0044	413.00	**507.99**

Vantage 2000 pivot door, 6mm tempered safety glass, 2000mm high

FEATURES

- 10 Year manufacturer's guarantee*
- Easy clean glass
- Trays available to match
- Suitable for power shower
- 6mm Tempered safety glass
- Anodized Matt Black finish
- Fully concealed fixings

*With conditions

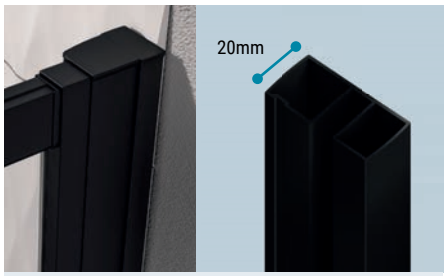

EXTRAS

Extension Profile - Matt Black

Size	Code	€ Ex VAT	€ Inc VAT
Vantage 2000 6mm Extension Profile Matt Black	49.1095	41.00	**50.43**

Works with both sides of the door to wall, or side panel to wall.

Vantage 2000

VANTAGE 2000 PIVOT DOOR - CHROME

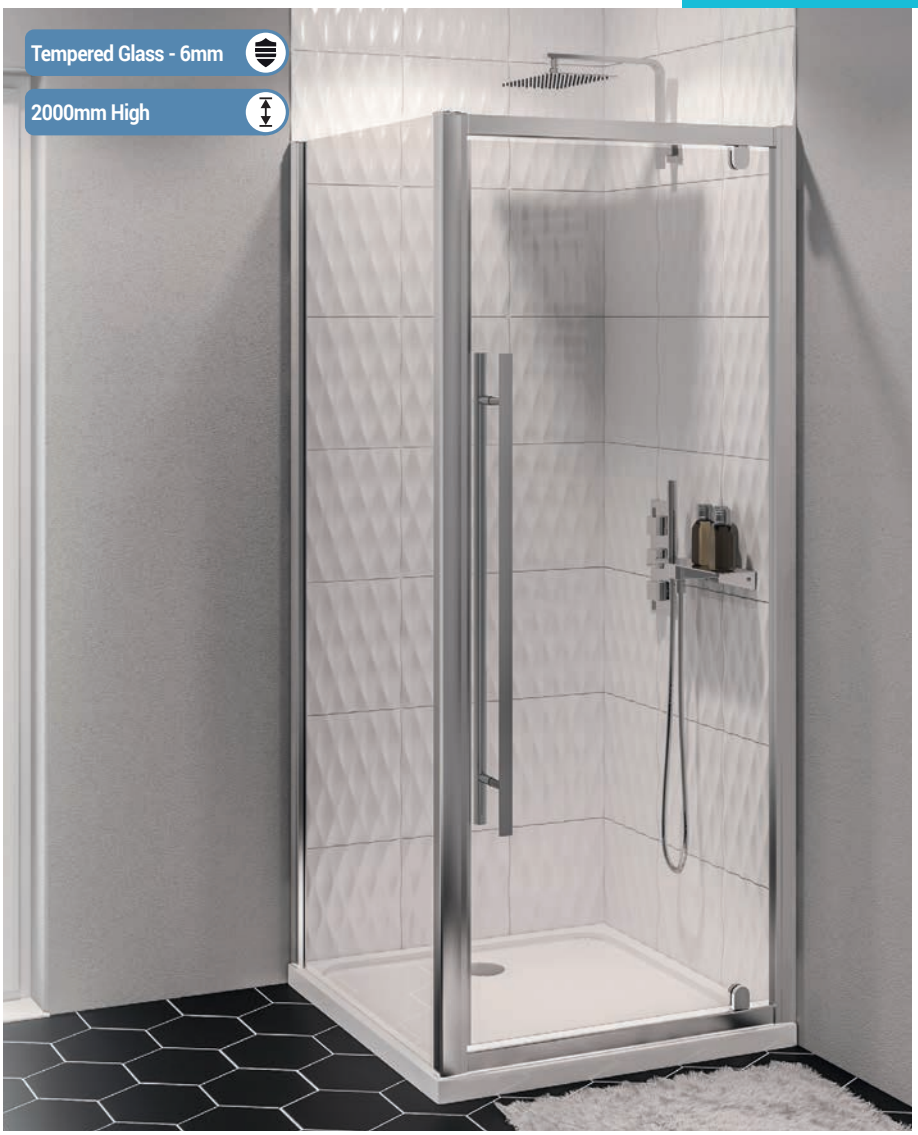





DOORS

Vantage 2000 Pivot Door - Chrome

Size	Adjustment	Door Opening	Code	€ Ex VAT	€ Inc VAT
700mm door	640mm-680mm	480mm	49.0019	478.00	**587.94**
760mm door	700mm-740mm	540mm	49.0021	497.00	**611.31**
800mm door	740mm-780mm	580mm	49.0023	507.00	**623.61**
900mm door	840mm-880mm	680mm	49.0025	537.00	**660.51**
1000mm door	940mm-980mm	720mm	49.0027	566.00	**696.18**

Adjustment varies when fitted with a side panel.

EXTRAS

Vantage 2000 Side Panel - Chrome

Size	Adjustment	Code	€ Ex VAT	€ Inc VAT
700mm side panel	660mm-680mm	49.0029	278.00	**341.94**
760mm side panel	720mm-740mm	49.0031	297.00	**365.31**
800mm side panel	760mm-780mm	49.0033	306.00	**376.38**
900mm side panel	860mm-880mm	49.0035	335.00	**412.05**
1000mm side panel	960mm-980mm	49.0037	364.00	**447.72**

Vantage 2000 Side Panel with Towel Rail - Chrome

Size	Adjustment	Code	€ Ex VAT	€ Inc VAT
700mm side panel with rail	660mm-680mm	49.0039	327.00	**402.21**
760mm side panel with rail	720mm-740mm	49.0041	343.00	**421.89**
800mm side panel with rail	760mm-780mm	49.0043	353.00	**434.19**
900mm side panel with rail	860mm-880mm	49.0045	383.00	**471.09**

Vantage 2000 pivot door, 6mm tempered safety glass, 2000mm high

FEATURES

- 10 Year manufacturer's guarantee*
- Easy clean glass
- Trays available to match
- Suitable for power shower
- 6mm Tempered safety glass
- Chrome coloured
- Fully concealed fixings

*With conditions

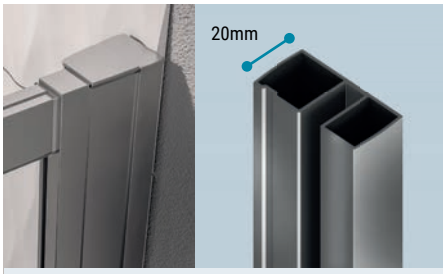

EXTRAS

Extension Profile - Chrome

Size	Code	€ Ex VAT	€ Inc VAT
Vantage 2000 6mm Extension Profile Chrome	49.1096	31.00	**38.13**

Works with both sides of the door to wall, or side panel to wall.

Vantage 2000

VANTAGE 2000 PIVOT DOOR - BRUSHED BRASS



DOORS

Vantage 2000 Pivot Door - Brushed Brass

Size	Adjustment	Door Opening	Code	€ Ex VAT	€ Inc VAT
700mm door	640mm-680mm	480mm	49.5008	593.00	**729.39**
760mm door	700mm-740mm	540mm	49.5009	609.00	**749.07**
800mm door	740mm-780mm	580mm	49.5011	619.00	**761.37**
900mm door	840mm-880mm	680mm	49.5012	646.00	**794.58**
1000mm door	940mm-980mm	720mm	49.5013	672.00	**826.56**

Adjustment varies when fitted with a side panel.

EXTRAS

Vantage 2000 Side Panel - Brushed Brass

Size	Adjustment	Code	€ Ex VAT	€ Inc VAT
700mm side panel	660mm-680mm	49.5014	313.00	**384.99**
760mm side panel	720mm-740mm	49.5015	327.00	**402.21**
800mm side panel	760mm-780mm	49.5016	335.00	**412.05**
900mm side panel	860mm-880mm	49.5017	359.00	**441.57**
1000mm side panel	960mm-980mm	49.5018	381.00	**468.63**

Vantage 2000 pivot door, 6mm tempered safety glass, 2000mm high

FEATURES

- 10 Year manufacturer's guarantee*
- Easy clean glass
- Trays available to match
- Suitable for power shower
- 6mm Tempered safety glass
- Brushed Brass finish
- Fully concealed fixings *With conditions

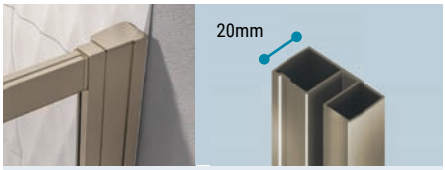

EXTRAS

Extension Profile - Brushed Brass

Size	Code	€ Ex VAT	€ Inc VAT
Vantage 2000 6mm Extension Profile Brushed Brass	49.3001	49.00	**60.27**

Works with both sides of the door to wall, or side panel to wall.

Vantage 2000

VANTAGE 2000 QUADRANT - MATT BLACK



Vantage 2000 quadrant, 6mm tempered safety glass, 2000mm high

FEATURES

- 10 Year manufacturer's guarantee*
- Easy clean glass
- Suitable for power showers
- Trays available to match
- 6mm Tempered safety glass
- Anodized Matt Black finish
- Fully concealed fixings

*With conditions

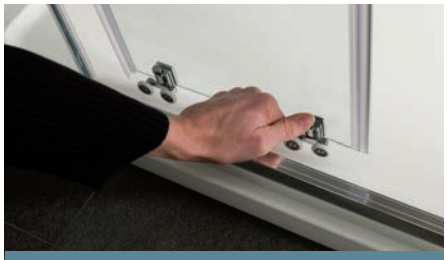

Runners release for ease of cleaning

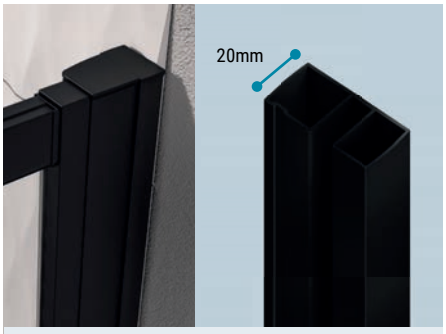

DOORS

Vantage 2000 Quadrant - Matt Black

Size	Adjustment	Door Opening	Colour	Code	€ Ex VAT	€ Inc VAT
800mm	760-780 x 760-780	425mm	Matt Black	49.0056	749.00	**921.27**
900mm	860-880 x 860-880	479mm	Matt Black	49.0058	794.00	**976.62**
1000mm	960-980 x 960-980	479mm	Matt Black	49.0060	859.00	**1056.57**

EXTRAS

Extension Profile - Matt Black

Size	Code	€ Ex VAT	€ Inc VAT
Vantage 2000 6mm Extension Profile Matt Black	49.1095	41.00	**50.43**

Works with both sides of the door to wall, or side panel to wall.

Vantage 2000

VANTAGE 2000 QUADRANT - CHROME

Tempered Glass - 6mm

2000mm High

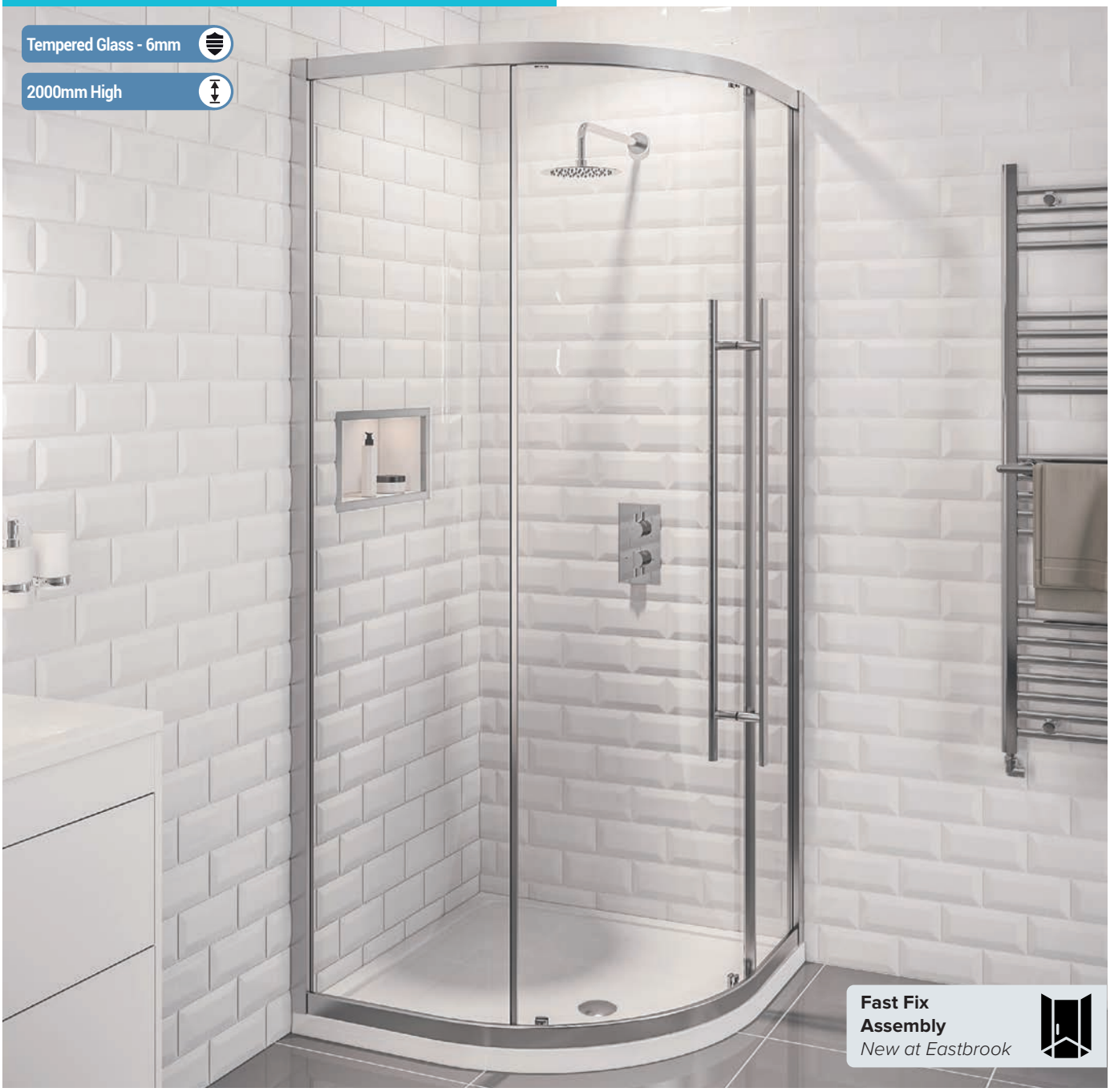

Fast Fix Assembly
New at Eastbrook

Vantage 2000 quadrant, 6mm tempered safety glass, 2000mm high

FEATURES
- 10 Year manufacturer's guarantee*
- Easy clean glass
- Suitable for power showers
- Trays available to match
- 6mm Tempered safety glass
- Chrome finish
- Fully concealed fixings

*With conditions

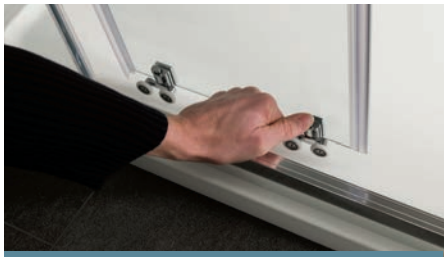

Runners release for ease of cleaning

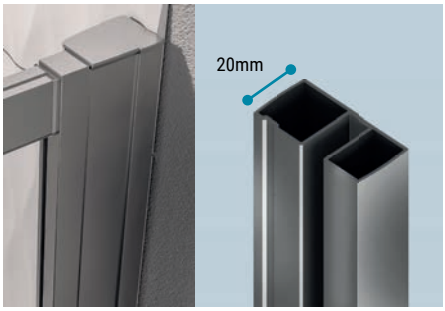

DOORS

Vantage 2000 Quadrant - Chrome

Size	Adjustment	Door Opening	Colour	Code	€ Ex VAT	€ Inc VAT
800mm	760-780 x 760-780	425mm	Chrome	49.0057	671.00	**825.33**
900mm	860-880 x 860-880	479mm	Chrome	49.0059	713.00	**876.99**
1000mm	960-980 x 960-980	479mm	Chrome	49.0061	776.00	**954.48**

EXTRAS

Extension Profile - Chrome

Size	Code	€ Ex VAT	€ Inc VAT
Vantage 2000 6mm Extension Profile Chrome	49.1096	31.00	**38.13**

Works with both sides of the door to wall, or side panel to wall.

Vantage 2000

VANTAGE 2000 QUADRANT - BRUSHED BRASS



Vantage 2000 quadrant, 6mm tempered safety glass, 2000mm high

FEATURES

- 10 Year manufacturer's guarantee*
- Easy clean glass
- Suitable for power showers
- Trays available to match
- 6mm Tempered safety glass
- Brushed Brass
- Fully concealed fixings

*With conditions

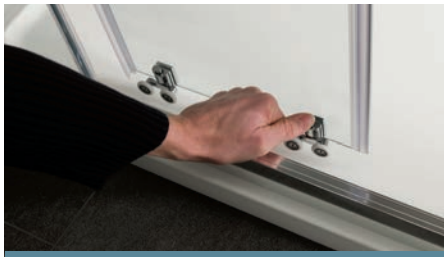

Runners release for ease of cleaning

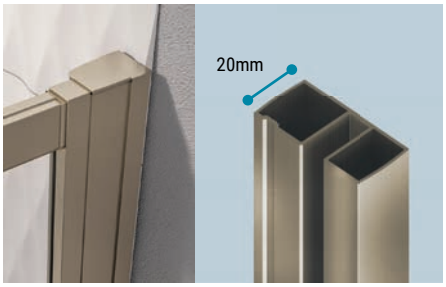

DOORS

Vantage 2000 Quadrant - Brushed Brass

Size	Adjustment	Door Opening	Colour	Code	€ Ex VAT	€ Inc VAT
800mm	760-780 x 760-780	425mm	Brushed Brass	49.5025	847.00	**1041.81**
900mm	860-880 x 860-880	479mm	Brushed Brass	49.5026	891.00	**1095.93**
1000mm	960-980 x 960-980	479mm	Brushed Brass	49.5027	937.00	**1152.51**

EXTRAS

Extension Profile - Brushed Brass

Size	Code	€ Ex VAT	€ Inc VAT
Vantage 2000 6mm Extension Profile Brushed Brass	49.3001	49.00	**60.27**

Works with both sides of the door to wall, or side panel to wall.

Vantage 2000

VANTAGE 2000 OFFSET QUADRANT - MATT BLACK

Tempered Glass - 6mm

2000mm High

Anodized Aluminium



Square Edge Handle

Fast Fix Assembly
New at Eastbrook

DOORS

Vantage 2000 Offset Quadrant - Matt Black

Size	Adjustment	Door Opening	Code	€ Ex VAT	€ Inc VAT
900 x 760mm	860-880 x 720-740	403mm	49.0062	758.00	**932.34**
900 x 800mm	860-880 x 760-780	425mm	49.0064	762.00	**937.26**
1000 x 760mm	960-980 x 720-740	403mm	49.0066	769.00	**945.87**
1000 x 800mm	960-980 x 760-780	425mm	49.0068	775.00	**953.25**
1000 X 900mm	960-980 x 860-880	479mm	49.0070	831.00	**1022.13**
1100 x 760mm	1060-1080 x 720-740	403mm	49.0072	874.00	**1075.02**
1100 x 800mm	1060-1080 x 760-780	425mm	49.0074	878.00	**1079.94**
1100 x 900mm	1060-1080 x 860-880	479mm	49.0076	940.00	**1156.20**
1200 x 760mm	1160-1180 x 720-740	403mm	49.0078	933.00	**1147.59**
1200 x 800mm	1160-1180 x 760-780	425mm	49.0080	891.00	**1095.93**
1200 x 900mm	1160-1180 x 860-880	479mm	49.0082	976.00	**1200.48**
1300 x 760mm	1260-1280 x 720-740	403mm	49.0084	992.00	**1220.16**
1300 x 800mm	1260-1280 x 760-780	425mm	49.0086	1015.00	**1248.45**
1400 x 760mm	1360-1380 x 720-740	403mm	49.0088	1050.00	**1291.50**
1400 x 800mm	1360-1380 x 760-780	425mm	49.0090	1077.00	**1324.71**

Offset Quadrant reversible left hand or right hand.
This product requires trays with 550mm radius curve.

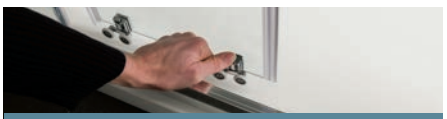

Runners release for ease of cleaning



Right Hand



Left Hand

Vantage 2000 offset quadrant, 6mm tempered glass, 2000mm high.

FEATURES

- 10 Year manufacturer's guarantee* W/Conditions
- Easy clean glass
- Suitable for power showers
- Trays available to match
- 6mm Tempered safety glass
- Anodized Matt Black finish
- Fully concealed fixings

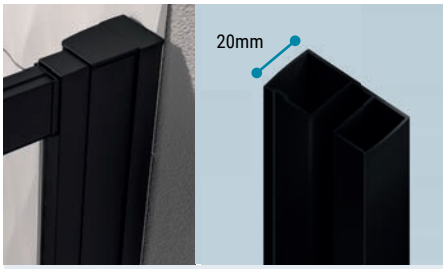

EXTRAS

Extension Profile - Matt Black

Size	Code	€ Ex VAT	€ Inc VAT
Vantage 2000 6mm Extension Profile Matt Black	49.1095	41.00	**50.43**

Works with both sides of the door to wall, or side panel to wall.

Vantage 2000

VANTAGE 2000 OFFSET QUADRANT - CHROME

Tempered Glass - 6mm

2000mm High



Square Edge Handle

Fast Fix Assembly
New at Eastbrook

DOORS

Vantage 2000 Offset Quadrant - Chrome

Size	Adjustment	Door Opening	Code	€ Ex VAT	€ Inc VAT
900 x 760mm	860-880 x 720-740	403mm	49.0063	678.00	**833.94**
900 x 800mm	860-880 x 760-780	425mm	49.0065	682.00	**838.86**
1000 x 760mm	960-980 x 720-740	403mm	49.0067	688.00	**846.24**
1000 x 800mm	960-980 x 760-780	425mm	49.0069	692.00	**851.16**
1000 X 900mm	960-980 x 860-880	479mm	49.0071	727.00	**894.21**
1100 x 760mm	1060-1080 x 720-740	403mm	49.0073	794.00	**976.62**
1100 x 800mm	1060-1080 x 760-780	425mm	49.0075	796.00	**979.08**
1100 x 900mm	1060-1080 x 860-880	479mm	49.0077	835.00	**1027.05**
1200 x 760mm	1160-1180 x 720-740	403mm	49.0079	853.00	**1049.19**
1200 x 800mm	1160-1180 x 760-780	425mm	49.0081	807.00	**992.61**
1200 x 900mm	1160-1180 x 860-880	479mm	49.0083	870.00	**1070.10**
1300 x 760mm	1260-1280 x 720-740	403mm	49.0085	909.00	**1118.07**
1300 x 800mm	1260-1280 x 760-780	425mm	49.0087	931.00	**1145.13**
1400 x 760mm	1360-1380 x 720-740	403mm	49.0089	965.00	**1186.95**
1400 x 800mm	1360-1380 x 760-780	425mm	49.0091	992.00	**1220.16**

Offset Quadrant reversible left hand or right hand.
This product requires trays with 550mm radius curve.

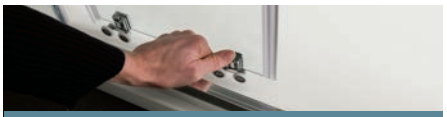

Runners release for ease of cleaning



Right Hand



Left Hand

Vantage 2000 offset quadrant, 6mm tempered glass, 2000mm high.

FEATURES

- 10 Year manufacturer's guarantee* W/Conditions
- Easy clean glass
- Suitable for power showers
- Trays available to match
- Chrome finish
- 6mm Tempered safety glass
- Fully concealed fixings

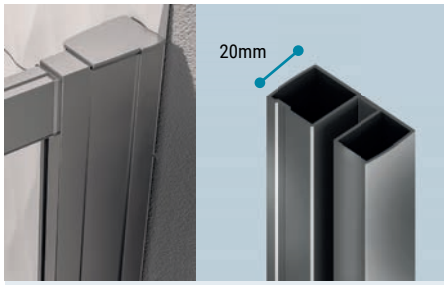

EXTRAS

Extension Profile - Chrome

Size	Code	€ Ex VAT	€ Inc VAT
Vantage 2000 6mm Extension Profile Chrome	49.1096	31.00	**38.13**

Works with both sides of the door to wall, or side panel to wall.

Vantage 2000

VANTAGE 2000 OFFSET QUADRANT - BRUSHED BRASS



Square Edge Handle

DOORS

Vantage 2000 Offset Quadrant - Brushed Brass

Size	Adjustment	Door Opening	Code	€ Ex VAT	€ Inc VAT
900 x 760mm	860-880 x 720-740	403mm	49.5028	853.00	**1049.19**
900 x 800mm	860-880 x 760-780	425mm	49.5029	863.00	**1061.49**
1000 x 760mm	960-980 x 720-740	403mm	49.5031	868.00	**1067.64**
1000 x 800mm	960-980 x 760-780	425mm	49.5032	878.00	**1079.94**
1000 X 900mm	960-980 x 860-880	479mm	49.5033	937.00	**1152.51**
1100 x 760mm	1060-1080 x 720-740	403mm	49.5034	889.00	**1093.47**
1100 x 800mm	1060-1080 x 760-780	425mm	49.5035	895.00	**1100.85**
1100 x 900mm	1060-1080 x 860-880	479mm	49.5036	952.00	**1170.96**
1200 x 760mm	1160-1180 x 720-740	403mm	49.5037	926.00	**1138.98**
1200 x 800mm	1160-1180 x 760-780	425mm	49.5038	924.00	**1136.52**
1200 x 900mm	1160-1180 x 860-880	479mm	49.5039	979.00	**1204.17**
1300 x 760mm	1260-1280 x 720-740	403mm	49.5041	962.00	**1183.26**
1300 x 800mm	1260-1280 x 760-780	425mm	49.5042	969.00	**1191.87**
1400 x 760mm	1360-1380 x 720-740	403mm	49.5043	1000.00	**1230.00**
1400 x 800mm	1360-1380 x 760-780	425mm	49.5044	996.00	**1225.08**

Offset Quadrant reversible left hand or right hand.
This product requires trays with 550mm radius curve.

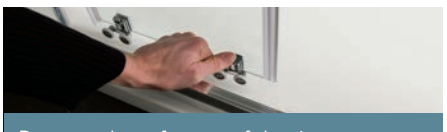
Runners release for ease of cleaning


Right Hand


Left Hand

Vantage 2000 offset quadrant, 6mm tempered glass, 2000mm high.

FEATURES

- 10 Year manufacturer's guarantee* W/Conditions
- Easy clean glass
- Suitable for power showers
- Trays available to match
- 6mm Tempered safety glass
- Brushed Brass finish
- Fully concealed fixings

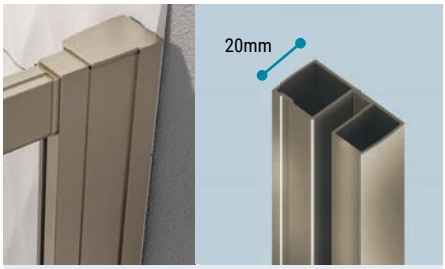

EXTRAS

Extension Profile - Brushed Brass

Size	Code	€ Ex VAT	€ Inc VAT
Vantage 2000 6mm Extension Profile Brushed Brass	49.3001	49.00	**60.27**

Works with both sides of the door to wall, or side panel to wall.

Vantage 2000

VANTAGE 2000 SLIDING DOOR - MATT BLACK







DOORS

Vantage 2000 Sliding Door - Matt Black

Size	Adjustment	Door Opening	Code	€ Ex VAT	€ Inc VAT
1000mm door	940mm-980mm	365mm	49.0004	593.00	**729.39**
1100mm door	1040mm-1080mm	415mm	49.0006	619.00	**761.37**
1200mm door	1140mm-1180mm	465mm	49.0008	643.00	**790.89**
1400mm door	1340mm-1380mm	565mm	49.0010	685.00	**842.55**
1600mm door	1540mm-1580mm	665mm	49.0012	735.00	**904.05**
1650mm door	1590mm-1630mm	690mm	49.0014	744.00	**915.12**
1700mm door	1640mm-1680mm	715mm	49.0016	751.00	**923.73**

Adjustment varies when fitted with a side panel.

EXTRAS

Vantage 2000 Side Panel - Matt Black

Size	Adjustment	Code	€ Ex VAT	€ Inc VAT
700mm Side panel	660mm-680mm	49.0028	334.00	**410.82**
760mm Side panel	720mm-740mm	49.0030	352.00	**432.96**
800mm Side panel	760mm-780mm	49.0032	364.00	**447.72**
900mm Side panel	860mm-880mm	49.0034	394.00	**484.62**
1000mm Side panel	960mm-980mm	49.0036	423.00	**520.29**

Vantage 2000 Side Panel with Towel Rail - Matt Black

Size	Adjustment	Code	€ Ex VAT	€ Inc VAT
700mm Side panel with rail	660mm-680mm	49.0038	357.00	**439.11**
760mm Side panel with rail	720mm-740mm	49.0040	374.00	**460.02**
800mm Side panel with rail	760mm-780mm	49.0042	385.00	**473.55**
900mm Side panel with rail	860mm-880mm	49.0044	413.00	**507.99**

Vantage 2000 quadrant, 6mm tempered safety glass, 2000mm high

FEATURES

- 10 Year manufacturer's guarantee* W/Conditions
- Easy clean glass
- Suitable for power showers
- Trays available to match
- 6mm Tempered safety glass
- Anodized Matt Black finish
- Fully concealed fixings

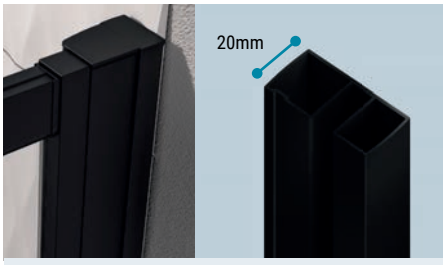

EXTRAS

Extension Profile - Matt Black

Size	Code	€ Ex VAT	€ Inc VAT
Vantage 2000 6mm Extension Profile Matt Black	49.1095	41.00	**50.43**

Works with both sides of the door to wall, or side panel to wall.

Vantage 2000

VANTAGE 2000 SLIDING DOOR - CHROME



DOORS

Vantage 2000 Sliding Door - Chrome

Size	Adjustment	Door Opening	Code	€ Ex VAT	€ Inc VAT
1000mm door	940mm-980mm	365mm	49.0005	527.00	**648.21**
1100mm door	1040mm-1080mm	415mm	49.0007	552.00	**678.96**
1200mm door	1140mm-1180mm	465mm	49.0009	576.00	**708.48**
1400mm door	1340mm-1380mm	565mm	49.0011	616.00	**757.68**
1600mm door	1540mm-1580mm	665mm	49.0013	668.00	**821.64**
1650mm door	1590mm-1630mm	690mm	49.0015	678.00	**833.94**
1700mm door	1640mm-1680mm	715mm	49.0017	691.00	**849.93**

Adjustment varies when fitted with a side panel.

EXTRAS

Vantage 2000 Side Panel - Chrome

Size	Adjustment	Code	€ Ex VAT	€ Inc VAT
700mm Side panel	660mm-680mm	49.0029	278.00	**341.94**
760mm Side panel	720mm-740mm	49.0031	297.00	**365.31**
800mm Side panel	760mm-780mm	49.0033	306.00	**376.38**
900mm Side panel	860mm-880mm	49.0035	335.00	**412.05**
1000mm Side panel	960mm-980mm	49.0037	364.00	**447.72**

Vantage 2000 Side Panel with Towel Rail - Chrome

Size	Adjustment	Code	€ Ex VAT	€ Inc VAT
700mm Side panel with rail	660mm-680mm	49.0039	327.00	**402.21**
760mm Side panel with rail	720mm-740mm	49.0041	343.00	**421.89**
800mm Side panel with rail	760mm-780mm	49.0043	353.00	**434.19**
900mm Side panel with rail	860mm-880mm	49.0045	383.00	**471.09**

Vantage 2000 quadrant, 6mm tempered safety glass, 2000mm high

FEATURES

- 10 Year manufacturer's guarantee* W/Conditions
- Easy clean glass
- Suitable for power showers
- Trays available to match
- 6mm Tempered safety glass
- Chrome finish
- Fully concealed fixings

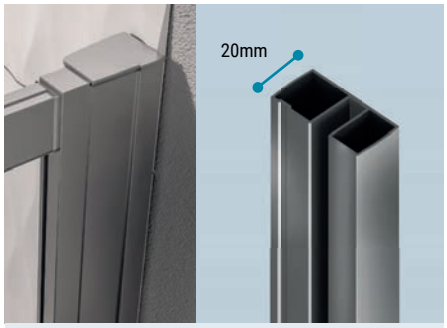

EXTRAS

Extension Profile - Chrome

Size	Code	€ Ex VAT	€ Inc VAT
Vantage 2000 6mm Extension Profile Chrome	49.1096	31.00	**38.13**

Works with both sides of the door to wall, or side panel to wall.

Vantage 2000

VANTAGE 2000 SLIDING DOOR - CHROME





Vantage 2000

VANTAGE 2000 SLIDING DOOR - BRUSHED BRASS

Tempered Glass - 6mm

2000mm High

NEW



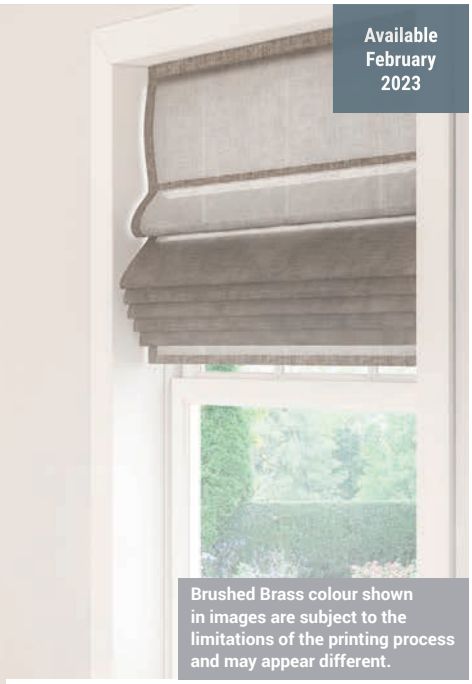

Available February 2023

Brushed Brass colour shown in images are subject to the limitations of the printing process and may appear different.



DOORS

Vantage 2000 Sliding Door - Brushed Brass

Size	Adjustment	Door Opening	Code	€ Ex VAT	€ Inc VAT
1000mm door	940mm-980mm	365mm	49.5001	639.00	**785.97**
1100mm door	1040mm-1080mm	415mm	49.5002	661.00	**813.03**
1200mm door	1140mm-1180mm	465mm	49.5003	684.00	**841.32**
1400mm door	1340mm-1380mm	565mm	49.5004	728.00	**895.44**
1600mm door	1540mm-1580mm	665mm	49.5005	773.00	**950.79**
1650mm door	1590mm-1630mm	690mm	49.5006	777.00	**955.71**
1700mm door	1640mm-1680mm	715mm	49.5007	780.00	**959.40**

Adjustment varies when fitted with a side panel.

EXTRAS

Vantage 2000 Side Panel - Brushed Brass

Size	Adjustment	Code	€ Ex VAT	€ Inc VAT
700mm side panel	660mm-680mm	49.5014	313.00	**384.99**
760mm side panel	720mm-740mm	49.5015	327.00	**402.21**
800mm side panel	760mm-780mm	49.5016	335.00	**412.05**
900mm side panel	860mm-880mm	49.5017	359.00	**441.57**
1000mm side panel	960mm-980mm	49.5018	381.00	**468.63**

Vantage 2000 quadrant, 6mm tempered safety glass, 2000mm high

FEATURES

- 10 Year manufacturer's guarantee* W/Conditions
- Easy clean glass
- Suitable for power showers
- 6mm Tempered safety glass
- Brushed Brass finish
- Fully concealed fixings

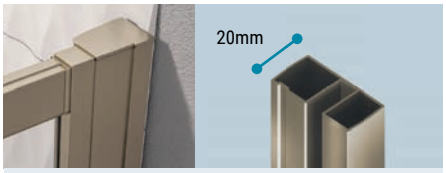

EXTRAS

Extension Profile - Brushed Brass

Size	Code	€ Ex VAT	€ Inc VAT
Vantage 2000 6mm Extension Profile Brushed Brass	49.3001	49.00	**60.27**

Works with both sides of the door to wall, or side panel to wall.

Vantage 2000

VANTAGE 2000 BI-FOLD DOOR - MATT BLACK







DOORS

Vantage 2000 Bi-Fold Door - Matt Black

Size	Adjustment	Door Opening	Code	€ Ex VAT	€ Inc VAT
700mm door	640mm-680mm	400mm	49.0046	628.00	**772.44**
760mm door	700mm-740mm	460mm	49.0048	651.00	**800.73**
800mm door	740mm-780mm	500mm	49.0050	667.00	**820.41**
900mm door	840mm-880mm	580mm	49.0052	702.00	**863.46**
1000mm door	940mm-980mm	660mm	49.0054	737.00	**906.51**

Adjustment varies when fitted with a side panel.

FEATURES

- 10 Year manufacturer's guarantee* W/Conditions
- Easy clean glass
- Suitable for power showers
- Trays available to match
- 6mm Tempered safety glass
- Anodized Matt Black finish
- Fully concealed fixings

Vantage bi-fold door, 6mm tempered glass, 2000mm high.

EXTRAS

Vantage 2000 Side Panel - Matt Black

Size	Adjustment	Code	€ Ex VAT	€ Inc VAT
700mm Side panel	660mm-680mm	49.0028	334.00	**410.82**
760mm Side panel	720mm-740mm	49.0030	352.00	**432.96**
800mm Side panel	760mm-780mm	49.0032	364.00	**447.72**
900mm Side panel	860mm-880mm	49.0034	394.00	**484.62**
1000mm Side panel	960mm-980mm	49.0036	423.00	**520.29**

Vantage 2000 Side Panel with Towel Rail - Matt Black

Size	Adjustment	Code	€ Ex VAT	€ Inc VAT
700mm Side panel with rail	660mm-680mm	49.0038	357.00	**439.11**
760mm Side panel with rail	720mm-740mm	49.0040	374.00	**460.02**
800mm Side panel with rail	760mm-780mm	49.0042	385.00	**473.55**
900mm Side panel with rail	860mm-880mm	49.0044	413.00	**507.99**

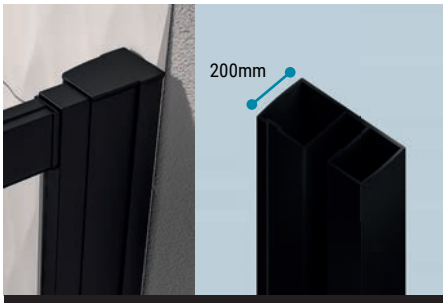

Extension Profile - Matt Black

Size	Code	€ Ex VAT	€ Inc VAT
Vantage 2000 6mm Extension Profile Matt Black	49.1095	41.00	**50.43**

Works with both sides of the door to wall, or side panel to wall.

Vantage 2000

VANTAGE 2000 BI-FOLD DOOR - CHROME

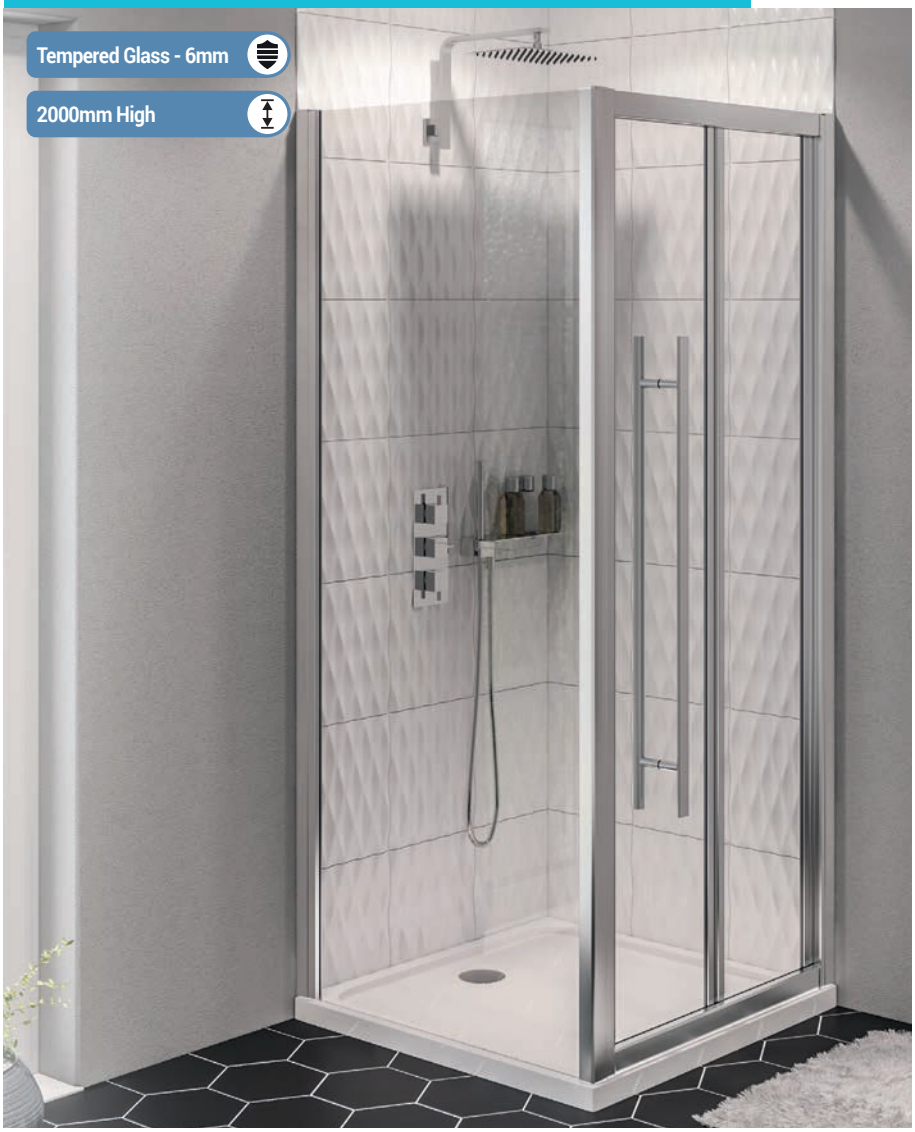





DOORS

Vantage 2000 Bi-Fold Door - Chrome

Size	Adjustment	Door Opening	Code	€ Ex VAT	€ Inc VAT
700mm door	640mm-680mm	400mm	49.0047	566.00	**696.18**
760mm door	700mm-740mm	460mm	49.0049	586.00	**720.78**
800mm door	740mm-780mm	500mm	49.0051	600.00	**738.00**
900mm door	840mm-880mm	580mm	49.0053	635.00	**781.05**
1000mm door	940mm-980mm	660mm	49.0055	672.00	**826.56**

Adjustment varies when fitted with a side panel.

FEATURES

- 10 Year manufacturer's guarantee* W/Conditions
- Easy clean glass
- Suitable for power showers
- Trays available to match
- 6mm Tempered safety glass
- Chrome finish
- Fully concealed fixings

Vantage bi-fold door, 6mm tempered glass, 2000mm high.

EXTRAS

Vantage 2000 Side Panel - Chrome

Size	Adjustment	Code	€ Ex VAT	€ Inc VAT
700mm Side panel	660mm-680mm	49.0029	278.00	**341.94**
760mm Side panel	720mm-740mm	49.0031	297.00	**365.31**
800mm Side panel	760mm-780mm	49.0033	306.00	**376.38**
900mm Side panel	860mm-880mm	49.0035	335.00	**412.05**
1000mm Side panel	960mm-980mm	49.0037	364.00	**447.72**

Vantage 2000 Side Panel with Towel Rail - Chrome

Size	Adjustment	Code	€ Ex VAT	€ Inc VAT
700mm Side panel with rail	660mm-680mm	49.0039	327.00	**402.21**
760mm Side panel with rail	720mm-740mm	49.0041	343.00	**421.89**
800mm Side panel with rail	760mm-780mm	49.0043	353.00	**434.19**
900mm Side panel with rail	860mm-880mm	49.0045	383.00	**471.09**

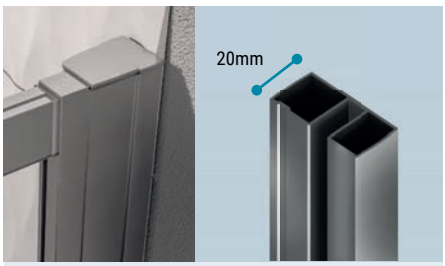

EXTRAS

Extension Profile - Chrome

Size	Code	€ Ex VAT	€ Inc VAT
Vantage 2000 6mm Extension Profile Chrome	49.1096	31.00	**38.13**

Works with both sides of the door to wall, or side panel to wall.

Vantage 2000

VANTAGE 2000 BI-FOLD DOOR - BRUSHED BRASS



DOORS

Vantage 2000 Bi-Fold Door - Brushed Brass

Size	Adjustment	Door Opening	Code	€ Ex VAT	€ Inc VAT
700mm door	640mm-680mm	400mm	49.5019	703.00	**864.69**
760mm door	700mm-740mm	460mm	49.5021	723.00	**889.29**
800mm door	740mm-780mm	500mm	49.5022	735.00	**904.05**
900mm door	840mm-880mm	580mm	49.5023	766.00	**942.18**
1000mm door	940mm-980mm	660mm	49.5024	497.00	**729.39**

Adjustment varies when fitted with a side panel.

FEATURES

- 10 Year manufacturer's guarantee* W/Conditions
- Easy clean glass
- Suitable for power showers
- Trays available to match
- 6mm Tempered safety glass
- Brushed Brass finish
- Fully concealed fixings

Vantage bi-fold door, 6mm tempered glass, 2000mm high.

EXTRAS

Vantage 2000 Side Panel - Brushed Brass

Size	Adjustment	Code	€ Ex VAT	€ Inc VAT
700mm Side panel	660mm-680mm	49.5014	313.00	**384.99**
760mm Side panel	720mm-740mm	49.5015	327.00	**402.21**
800mm Side panel	760mm-780mm	49.5016	335.00	**412.05**
900mm Side panel	860mm-880mm	49.5017	359.00	**441.57**
1000mm Side panel	960mm-980mm	49.5018	381.00	**468.63**

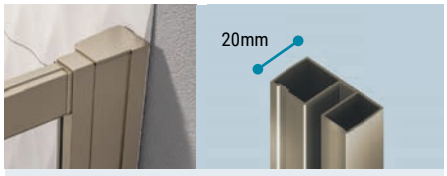

EXTRAS

Extension Profile - Brushed Brass

Size	Code	€ Ex VAT	€ Inc VAT
Vantage 2000 6mm Extension Profile Brushed Brass	49.3001	49.00	**60.27**

Works with both sides of the door to wall, or side panel to wall.

Vantage 2000

VANTAGE 2000 CORNER ENTRY & OFFSET CORNER ENTRY - MATT BLACK



Vantage 2000 offset corner entry 6mm tempered glass, 2000mm high.

FEATURES

- 10 Year manufacturer's guarantee* With conditions
- Easy clean glass
- Suitable for power showers
- Trays available to match
- Anodized Matt Black finish
- 6mm Tempered safety glass
- Fully concealed fixings

DOORS

Vantage 2000 Corner Entry & Offset Corner Entry - Matt Black

Size	Adjustment	Door Opening	Code	€ Ex VAT	€ Inc VAT
800 x 800mm	760-780 x 760-780	370mm	49.0102	755.00	**928.65**
900 x 700mm	860-880 x 660-680	370mm	49.0092	770.00	**947.10**
900 x 760mm	860-880 x 720-740	390mm	49.0094	779.00	**958.17**
900 x 800mm	860-880 x 760-780	405mm	49.0096	784.00	**964.32**
900 x 900mm	860-880 x 860-880	440mm	49.0104	796.00	**979.08**
1000 x 760mm	960-980 x 720-740	420mm	49.0098	808.00	**993.84**
1000 x 800mm	960-980 x 760-780	440mm	49.0100	811.00	**997.53**



Runners release for ease of cleaning

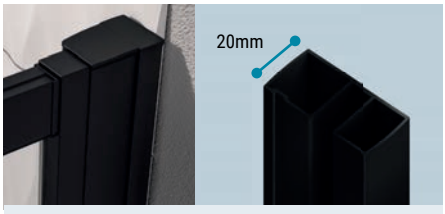

EXTRAS

Extension Profile - Matt Black

Size	Code	€ Ex VAT	€ Inc VAT
Vantage 2000 6mm Extension Profile Matt Black	49.1095	41.00	**50.43**

Works with both sides of the door to wall, or side panel to wall.

Vantage 2000

VANTAGE 2000 CORNER ENTRY & OFFSET CORNER ENTRY - CHROME



Vantage 2000 offset corner entry 6mm tempered glass, 2000mm high.

FEATURES

- 10 Year manufacturer's guarantee* With conditions
- Easy clean glass
- Suitable for power showers
- Trays available to match
- Sliver finish
- 6mm Tempered safety glass
- Fully concealed fixings

DOORS

Vantage 2000 Corner Entry & Offset Corner Entry - Chrome

Size	Adjustment	Door Opening	Code	€ Ex VAT	€ Inc VAT
800 x 800mm	760-780 x 760-780	370mm	49.0103	671.00	**825.33**
900 x 700mm	860-880 x 660-680	370mm	49.0093	686.00	**843.78**
900 x 760mm	860-880 x 720-740	390mm	49.0095	696.00	**856.08**
900 x 800mm	860-880 x 760-780	405mm	49.0097	699.00	**859.77**
900 x 900mm	860-880 x 860-880	440mm	49.0105	707.00	**869.61**
1000 x 760mm	960-980 x 720-740	420mm	49.0099	723.00	**889.29**
1000 x 800mm	960-980 x 760-780	440mm	49.0101	724.00	**890.52**

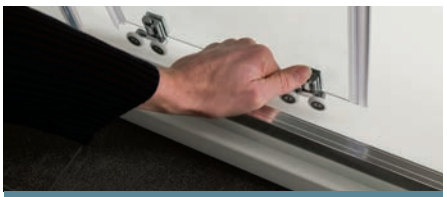

Runners release for ease of cleaning

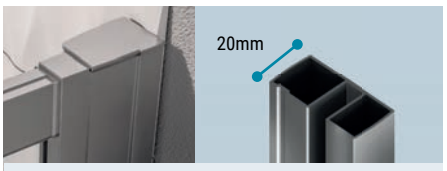

EXTRAS

Extension Profile - Chrome

Size	Code	€ Ex VAT	€ Inc VAT
Vantage 2000 6mm Extension Profile Chrome	49.1096	31.00	**38.13**

Works with both sides of the door to wall, or side panel to wall.

Corniche

CORNICHE SLIDER DOOR

Tempered Glass - 8mm

1950 mm High



DOORS

Corniche Slider Door

Size	Adjustment	Door Opening	Code	€ Ex VAT	€ Inc VAT
1000mm Slider	960-1000mm	395mm	69.0075	943.00	**1159.89**
1100mm Slider	1060-1100mm	445mm	69.0076	959.00	**1179.57**
1200mm Slider	1160-1200mm	485mm	69.0077	985.00	**1211.55**
1200mm Slider, easy-clean, soft-close	1160-1200mm	485mm	69.0081	1179.00	**1450.17**
1400mm Slider	1360-1400mm	510mm	69.0078	1092.00	**1343.16**
1600mm Slider	1560-1600mm	610mm	69.0079	1174.00	**1444.02**
1700mm Slider	1660-1700mm	665mm	69.0080	1220.00	**1500.60**

Adjustment varies when fitted with a side panel.

EXTRAS

Corniche Side Panel

Size	Adjustment	Code	€ Ex VAT	€ Inc VAT
700mm Side Panel	685-700mm	69.0106	521.00	**640.83**
760mm Side Panel	745-760mm	69.0107	539.00	**662.97**
800mm Side Panel	785-800mm	69.0108	562.00	**691.26**
900mm Side Panel	885-900mm	69.0109	600.00	**738.00**
1000mm Side Panel	985-1000mm	69.0110	595.00	**731.85**
1200mm Side Panel	1185-1200mm	69.0138	671.00	**825.33**

Side Panel with Towel Rail

Size	Adjustment	Code	€ Ex VAT	€ Inc VAT
700mm Side Panel with towel rail	685-700mm	69.0101	566.00	**696.18**
760mm Side Panel with towel rail	745-760mm	69.0102	567.00	**697.41**
800mm Side Panel with towel rail	785-800mm	69.0103	570.00	**701.10**
900mm Side Panel with towel rail	885-900mm	69.0104	590.00	**725.70**
1000mm Side Panel with towel rail	985-1000mm	69.0105	654.00	**804.42**

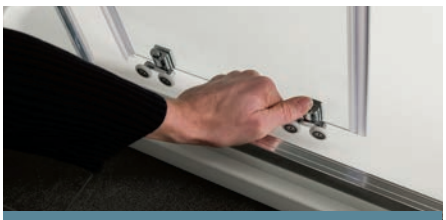

Runners release for ease of cleaning

Corniche sliding door, 1950mm high with 8mm tempered safety glass doors. (BS EN12150)

FEATURES

- 10 Year manufacturer's guarantee*
- Easy clean glass
- Top cover cap
- Magnetic closing
- Suitable for power showers
- 8mm Tempered safety glass
- Soft close system available on the 1200 door
- Polished Chrome

*With conditions

Corniche

CORNICHE HINGE DOOR







Corniche hinge door, 1950mm high with 8mm tempered safety glass doors (BS EN12150)

FEATURES

- 10 Year manufacturer's guarantee*
- Easy clean glass
- Top cover cap
- Suitable for power showers
- 8mm Tempered safety glass
- Polished Chrome

*With conditions

DOORS

Corniche Hinge Door

Size	Adjustment	Door Opening	Code	€ Ex VAT	€ Inc VAT
700mm Door	660-700mm	540mm	69.0087	1000.00	**1230.00**
760mm Door	720-760mm	600mm	69.0088	1017.00	**1250.91**
800mm Door	760-800mm	640mm	69.0089	1028.00	**1264.44**
900mm Door	860-900mm	740mm	69.0090	1069.00	**1314.87**
1000mm Door	960-1000mm	840mm	69.0091	1094.00	**1345.62**

Adjustment varies when fitted with a side panel.

EXTRAS

Corniche Side Panel

Size	Adjustment	Code	€ Ex VAT	€ Inc VAT
700mm Side Panel	685-700mm	69.0106	521.00	**640.83**
760mm Side Panel	745-760mm	69.0107	539.00	**662.97**
800mm Side Panel	785-800mm	69.0108	562.00	**691.26**
900mm Side Panel	885-900mm	69.0109	600.00	**738.00**
1000mm Side Panel	985-1000mm	69.0110	595.00	**731.85**
1200mm Side Panel	1185-1200mm	69.0138	671.00	**825.33**

Side Panel with Towel Rail

Size	Adjustment	Code	€ Ex VAT	€ Inc VAT
700 Side Panel with towel rail	685-700mm	69.0101	566.00	**696.18**
760 Side Panel with towel rail	745-760mm	69.0102	567.00	**697.41**
800 Side Panel with towel rail	785-800mm	69.0103	570.00	**701.10**
900 Side Panel with towel rail	885-900mm	69.0104	590.00	**725.70**
1000 Side Panel with towel rail	985-1000mm	69.0105	654.00	**804.42**

Corniche

CORNICHE QUADRANT



Corniche Quadrant, 1950mm high with 8mm tempered safety glass doors. (BS EN12150)

FEATURES

- 10 Year manufacturer's guarantee*
- Easy clean glass
- Top cover cap
- Magnetic closing
- Suitable for power showers
- 8mm Tempered safety glass
- Polished Chrome

*With conditions

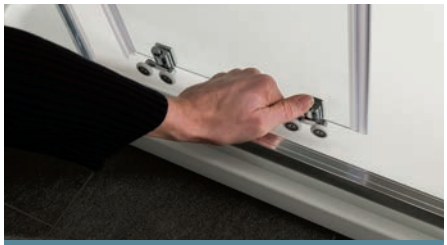

Runners release for ease of cleaning

DOORS

Corniche Quadrant

Size	Adjustment	Door Opening	Code	€ Ex VAT	€ Inc VAT
800mm Quadrant	765-800mm	375mm	69.0059	1227.00	**1509.21**
900mm Quadrant	865-900mm	510mm	69.0060	1288.00	**1584.24**
1000mm Quadrant	965-1000mm	510mm	69.0061	1365.00	**1678.95**

Corniche

CORNICHE OFFSET QUADRANT



Corniche Offset Quadrant, illustrated with Volente shower tray (see page 455). 1950mm high with 8mm tempered safety glass doors. (BS EN12150)

FEATURES

- 10 Year manufacturer's guarantee*
- Easy clean glass
- Top cover cap
- Magnetic closing
- Suitable for power showers
- 8mm Tempered safety glass
- Polished Chrome

*With conditions

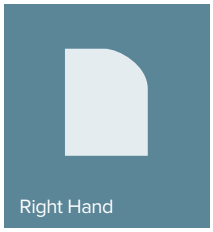
Right Hand


Left Hand

DOORS

Corniche Offset Quadrant

Size	Adjustment	Door Opening	Code	€ Ex VAT	€ Inc VAT
900 x 760mm	870-900mm x 730-760mm	410mm	69.0062	1223.00	**1504.29**
900 x 800mm	870-900mm x 770-800mm	460mm	69.0063	1242.00	**1527.66**
1000 x 760mm	970-1000mm x 730-760mm	445mm	69.0064	1242.00	**1527.66**
1000 x 800mm	970-1000mm x 770-800mm	470mm	69.0065	1276.00	**1569.48**
1000 x 900mm	970-1000mm x 870-900mm	460mm	69.0066	1309.00	**1610.07**
1200 x 800mm	1170-1200mm x 770-800mm	470mm	69.0067	1339.00	**1646.97**
1200 x 900mm	1170-1200mm x 870-900mm	460mm	69.0068	1374.00	**1690.02**

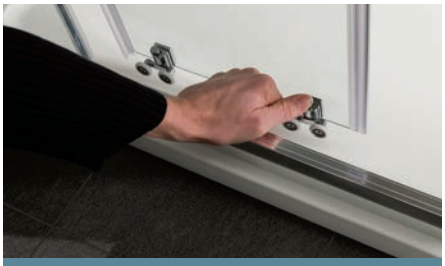
Runners release for ease of cleaning

Corniche 2000

CORNICHE 2000 SLIDING DOOR - CHROME

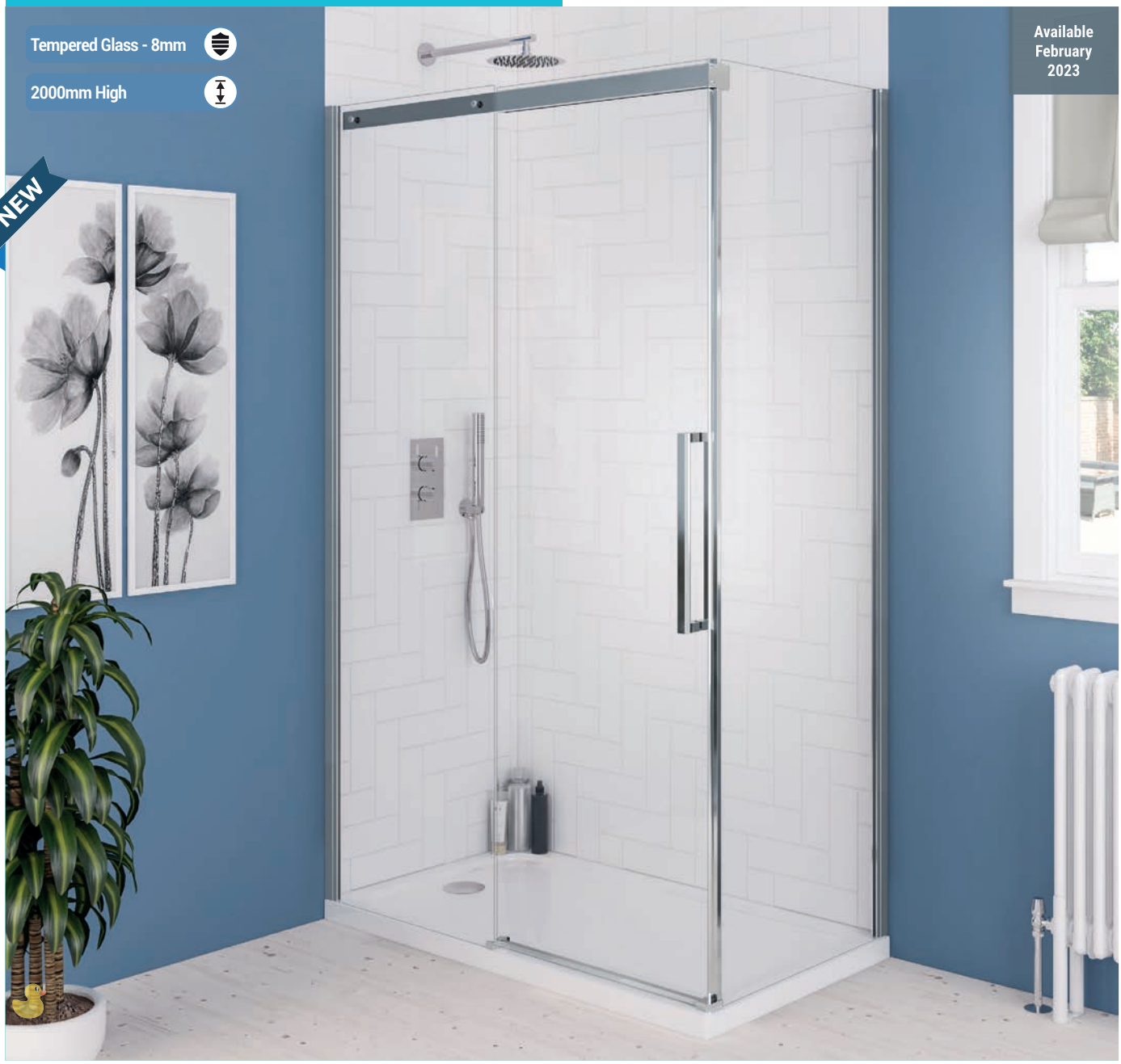

DOORS

Corniche 2000 Sliding Door - Chrome

Size	Adjustment	Door Opening	Code	€ Ex VAT	€ Inc VAT
1000mm	965mm- 980mm	388mm	49.6001	642.00	**789.66**
1100mm	1065mm-1080mm	438mm	49.6002	674.00	**829.02**
1200mm	1165mm-1180mm	488mm	49.6003	707.00	**869.61**
1400mm	1365mm-1380mm	588mm	49.6004	773.00	**950.79**
1600mm	1565mm-1580mm	688mm	49.6005	840.00	**1033.20**
1700mm	1665mm-1680mm	738mm	49.6006	868.00	**1067.64**

Adjustment varies when fitted with a side panel.

EXTRAS

Corniche 2000 Side Panel - Chrome

Size	Adjustment	Code	€ Ex VAT	€ Inc VAT
700mm side panel	665mm-680mm	49.6007	367.00	**451.41**
760mm side panel	725mm-740mm	49.6008	385.00	**473.55**
800mm side panel	765mm-780mm	49.6009	401.00	**493.23**
900mm side panel	865mm-880mm	49.6011	420.00	**516.60**
1000mm side panel	965mm-980mm	49.6012	447.00	**549.81**

Corniche 2000 quadrant, 8mm tempered safety glass, 2000mm high

FEATURES

- 10 Year manufacturer's guarantee* W/Conditions
- Easy clean glass
- Suitable for power showers
- Trays available to match
- 8mm Tempered safety glass
- Chrome finish
- Fully concealed fixings

Corniche 2000

CORNICHE 2000 SLIDING DOOR - CHROME

Available February 2023

NEW







COMPLETE THE LOOK

Cavone 60cm Door Cabinet

Size	Colour	Code	€ Ex VAT	€ Inc VAT
60cm Door Cabinet	Matt Grey	36.0048	670.00	**824.10**

Corniche 2000

CORNICHE 2000 SLIDING DOOR - BRUSHED BRASS





DOORS

Corniche 2000 Sliding Door - Brushed Brass

Size	Adjustment	Door Opening	Code	€ Ex VAT	€ Inc VAT
1000mm door	965mm- 980mm	388mm	49.6025	786.00	**966.78**
1100mm door	1065mm-1080mm	438mm	49.6026	824.00	**1013.52**
1200mm door	1165mm-1180mm	488mm	49.6027	863.00	**1061.49**
1400mm door	1365mm-1380mm	588mm	49.6028	936.00	**1151.28**
1600mm door	1565mm-1580mm	688mm	49.6029	999.00	**1228.77**
1700mm door	1665mm-1680mm	738mm	49.6031	1028.00	**1264.44**

Adjustment varies when fitted with a side panel.

EXTRAS

Corniche 2000 Side Panel - Brushed Brass

Size	Adjustment	Code	€ Ex VAT	€ Inc VAT
700mm side panel	665mm-680mm	49.6032	413.00	**507.99**
760mm side panel	725mm-740mm	49.6033	433.00	**532.59**
800mm side panel	765mm-780mm	49.6034	448.00	**551.04**
900mm side panel	865mm-880mm	49.6035	469.00	**576.87**
1000mm side panel	965mm-980mm	49.6036	497.00	**611.31**



Corniche 2000 quadrant, 8mm tempered safety glass, 2000mm high

FEATURES

- 10 Year manufacturer's guarantee* W/Conditions
- Easy clean glass
- Suitable for power showers
- Trays available to match
- 8mm Tempered safety glass
- Brushed Brass finish
- Fully concealed fixings

Corniche 2000

CORNICHE 2000 SLIDING DOOR - MATT BLACK

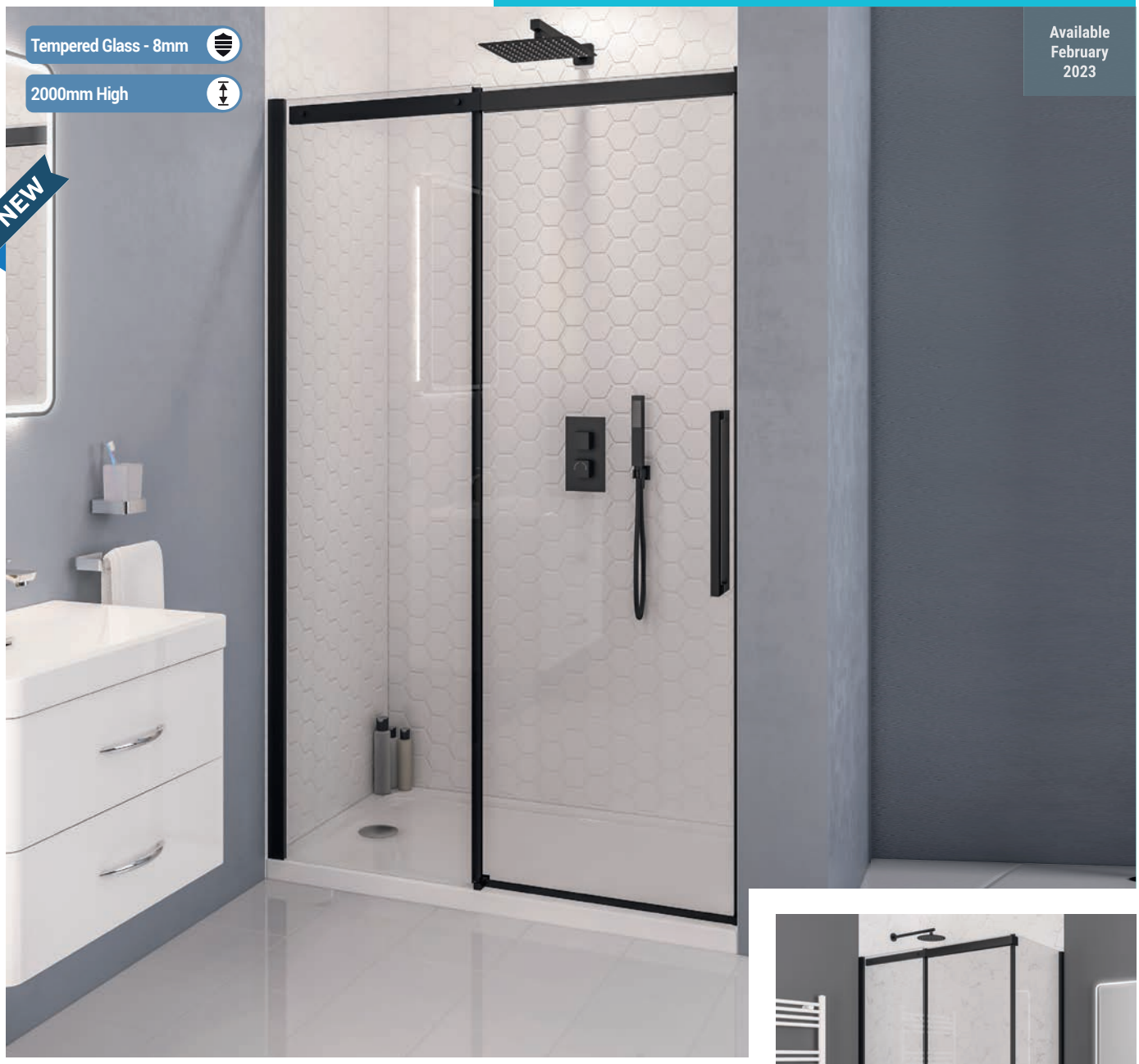

DOORS

Corniche 2000 Sliding Door - Matt Black

Size	Adjustment	Door Opening	Code	€ Ex VAT	€ Inc VAT
1000mm door	965mm- 980mm	388mm	49.6013	723.00	**889.29**
1100mm door	1065mm-1080mm	438mm	49.6014	759.00	**933.57**
1200mm door	1165mm-1180mm	488mm	49.6015	794.00	**976.62**
1400mm door	1365mm-1380mm	588mm	49.6016	863.00	**1061.49**
1600mm door	1565mm-1580mm	688mm	49.6017	922.00	**1134.06**
1700mm door	1665mm-1680mm	738mm	49.6018	948.00	**1166.04**

Adjustment varies when fitted with a side panel.

EXTRAS

Corniche 2000 Side Panel - Matt Black

Size	Adjustment	Code	€ Ex VAT	€ Inc VAT
700mm side panel	665mm-680mm	49.6019	383.00	**471.09**
760mm side panel	725mm-740mm	49.6021	401.00	**493.23**
800mm side panel	765mm-780mm	49.6022	416.00	**511.68**
900mm side panel	865mm-880mm	49.6023	436.00	**536.28**
1000mm side panel	965mm-980mm	49.6024	462.00	**568.26**



Corniche 2000 quadrant, 8mm tempered safety glass, 2000mm high

FEATURES

- 10 Year manufacturer's guarantee* W/Conditions
- Easy clean glass
- Suitable for power showers
- Trays available to match
- 8mm Tempered safety glass
- 0Anodized Matt Black finish
- Fully concealed fixings

Vanguard

VANGUARD SLIDER

Tempered Glass - 10mm

2000 mm High



Vanguard

VANGUARD SLIDER



N.B. When using a side panel the door must be fitted so that it closes against the side panel as shown above.

DOORS

Vanguard Slider

Size	Adjustment	Door Opening	Code	€ Ex VAT	€ Inc VAT
1000mm door	980-1000mm	380mm	58.250	1470.00	**1808.10**
1100mm door	1080-1100mm	420mm	58.251	1501.00	**1846.23**
1200mm door	1180-1200mm	460mm	58.252	1536.00	**1889.28**
1400mm door	1380-1400mm	540mm	58.253	1570.00	**1931.10**
1600mm door	1580-1600mm	620mm	58.254	1640.00	**2017.20**
1700mm door	1680-1700mm	660mm	58.255	1722.00	**2118.06**

EXTRAS

Vanguard Side Panel

Size	Adjustment	Code	€ Ex VAT	€ Inc VAT
700mm side panel	680-700mm	58.262	598.00	**735.54**
760mm side panel	740-760mm	58.263	621.00	**763.83**
800mm side panel	780-800mm	58.264	639.00	**785.97**
900mm side panel	880-900mm	58.265	677.00	**832.71**
1000mm side panel	980-1000mm	58.266	730.00	**897.90**

Luxurious, easy to clean enclosure with a distinctive top roller mechanism making a bold statement in your bathroom. 10mm tempered safety glass, 2000mm height.

FEATURES

- 10 Year manufacturer's guarantee*
- Easy clean glass
- Trays available to match
- 10mm Tempered safety glass
- Polished Chrome

*With conditions

Vanguard

VANGUARD QUAD



Door opening as illustrated only.

DOORS

Vanguard Quadrant

Size	Adjustment	Door Opening	Code	€ Ex VAT	€ Inc VAT
800mm	780-800mm	430mm	58.256	1708.00	**2100.84**
900mm	880-900mm	470mm	58.257	1743.00	**2143.89**
1000mm	980-1000mm	470mm	58.258	1867.00	**2296.41**

Luxurious, easy to clean enclosure with a distinctive top roller mechanism making a bold statement in your bathroom.
10mm tempered safety glass, 2000mm height.

FEATURES

- 10 Year manufacturer's guarantee*
- Easy clean glass
- Trays available to match
- 10mm Tempered safety glass
- Polished Chrome

*With conditions

Vanguard

VANGUARD OFFSET QUADRANT



Door opening as illustrated only. Enclosure available in left or right hand. Right hand shown above.

Luxurious, easy to clean enclosure with a distinctive top roller mechanism making a bold statement in your bathroom. 10mm tempered safety glass, 2000mm height.

FEATURES

- 10 Year manufacturer's guarantee*
- Easy clean glass
- Trays available to match
- 10mm Tempered safety glass
- Polished Chrome

*With conditions


Right Hand


Left Hand


Left hand shown above

DOORS

Vanguard Offset Quadrant

Size	Adjustment	Door Opening	Code	€ Ex VAT	€ Inc VAT
800 x 1000mm	780-800 x 980-1000mm	430mm	58.259L or R	1820.00	**2238.60**
800 x 1200mm	780-800 x 1180-1200mm	430mm	58.260L or R	1883.00	**2316.09**
900 x 1200mm	880-900 x 1180-1200mm	454mm	58.261L or R	1899.00	**2335.77**

Valliant Walk-In

Tempered Glass - 8mm

1950 mm High

VALLIANT - TYPE A

Type A panels are fixed to the wall with a wall profile, the panel also comes with one wall support bar.

FEATURES
- 10 Year manufacturer's guarantee*
- Easy clean glass
- 1950mm Height
- Trays available to match
- 8mm Tempered safety glass

*With conditions

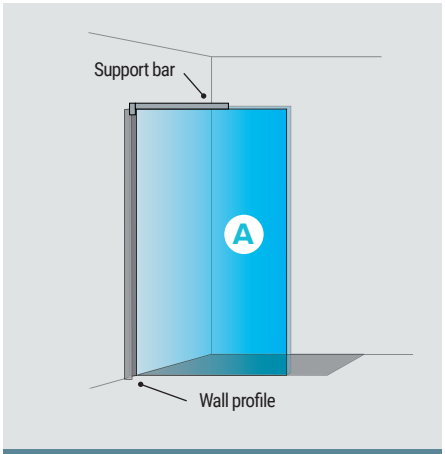

Panel A
Comes with 1 wall profile and 1 support bar.

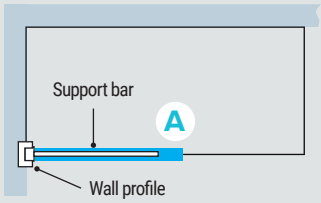



Panel A - Example
58.356 800mm side panel including support bar and wall profile (A) See page 416 for details.

VALLIANT - TYPE B

Type B panels can only be used in a walk-through situation, the panel is a single pane of glass and comes with two wall support bars only. This can be used with two type C, 250mm panels, which contain a corner profile so they can be attached to the Type B panel. They can both be installed with a tray or in a wetroom situation.

FEATURES
- 10 Year manufacturer's guarantee*
- Easy clean glass
- 1950mm Height
- Trays available to match
- 8mm Tempered safety glass

*With conditions

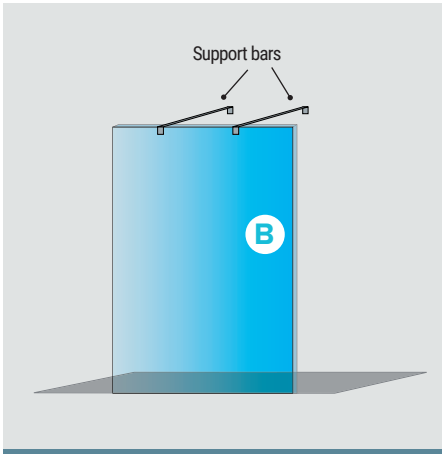

Panel B - Comes with 2 support bars.
(No wall profile supplied).

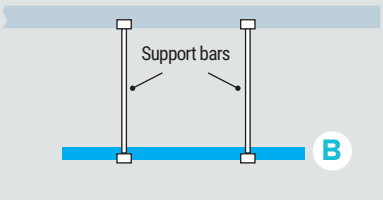



Panel B - Example
58.362 1200mm walk-in panel with two support bars (B), see page 417 for details.

VALLIANT - TYPE C

Type C is a single pane of glass with a corner profile, this can only be attached to another pane of glass (no wall support bar is provided with Type C). Type A/B & C can be used together to create different walk-in situations as illustrated, see page opposite and below. However please note the wall support bar from Type A/B can be used on either pane of glass to suit your requirements.

FEATURES
- 10 Year manufacturer's guarantee*
- 1950mm Height
- Easy clean glass
- 8mm Tempered safety glass

*With conditions

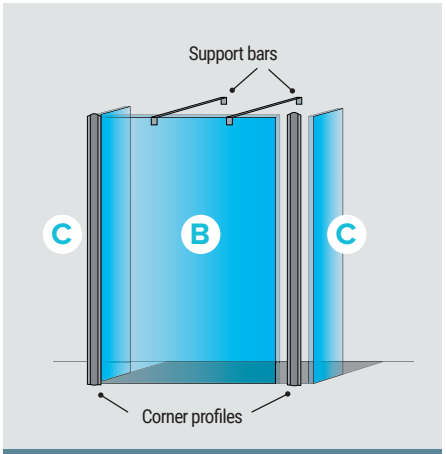

Panel C - Comes with 1 corner profile (No wall profile supplied), shown with Type B panel.

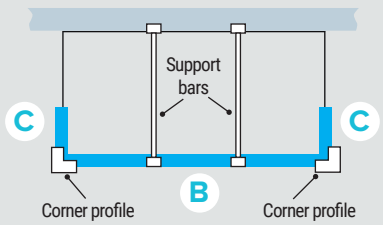



Panel C - Example
58.362 1200mm walk-in panel with two support bars (B), 2 x 58.363 250mm end panels (C), see page 417 for details.

Valliant Walk-In

VALLIANT - TYPE D

Type D contains a panel of glass with a wall profile, plus a 300mm flipper which is hinged and rotates 180 degrees. Type D must be fixed to the wall, it cannot be fixed to another pane of glass.

FEATURES
- 10 Year manufacturer's guarantee*
- Easy clean glass
- 1950mm Height
- Trays available to match
- 8mm Tempered safety glass

*With conditions

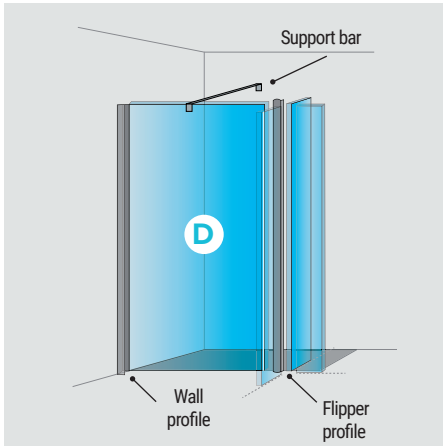

Panel C - Comes with 1 wall profile, support bar and a 300mm flipper.

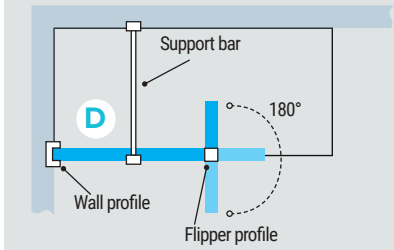



Panel C - Example
58.351 800mm front panel with wall profile and 300mm flipper (D), see page 417 for details.

OTHER VALLIANT COMBINATIONS

TYPE A & C

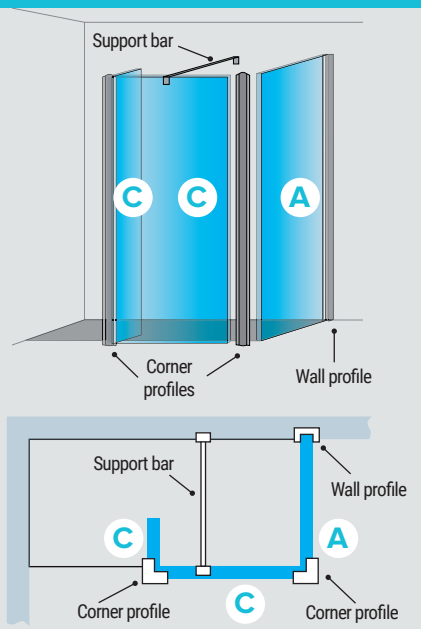

See page 419-420 for details.

TYPE A & C

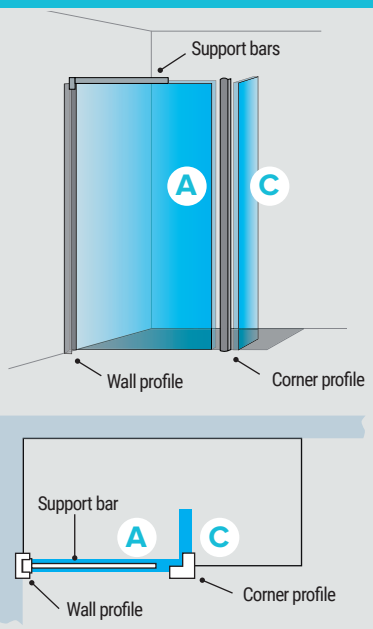

See page 412-420 for details.

TYPE A & C

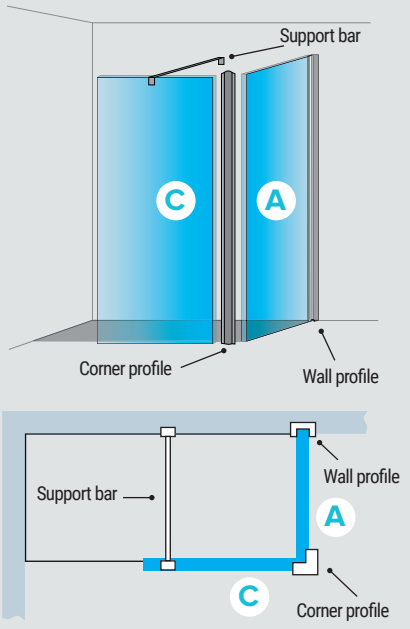

See page 419-420 for details.

TYPE A & D

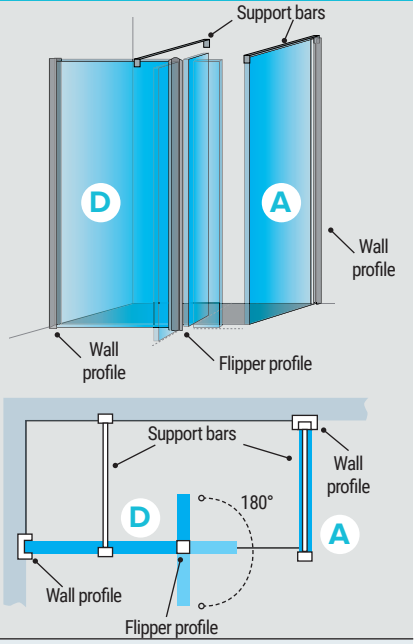

See page 418 for details.

TYPE A

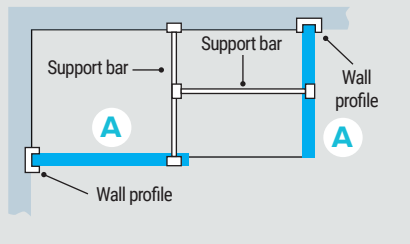

See page 416 for details.

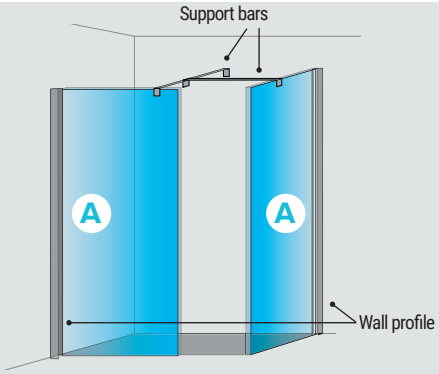

Valliant Walk-In

VALLIANT - TYPE A



Application 1

58.356 800mm side panel including support bar and wall profile (A)



Application 2

2 x 58.357 900mm side panel including support bar and wall profile (A)

Valliant Walk-in - Type A						
Size	Includes	Adjustment	Type	Code	€ Ex VAT	€ Inc VAT
300x1950 (8mm)	support bar	282-300mm	A	58.103	406.00	**499.38**
500x1950 (8mm)	support bar	482-500mm	A	58.689	450.00	**553.50**
700x1950 (8mm)	support bar	662-680mm	A	58.354	598.00	**735.54**
760x1950 (8mm)	support bar	722-740mm	A	58.355	608.00	**747.84**
800x1950 (8mm)	support bar	762-780mm	A	58.356	621.00	**763.83**
900x1950 (8mm)	support bar	862-880mm	A	58.357	660.00	**811.80**
1000x1950 (8mm)	support bar	962-980mm	A	58.358	700.00	**861.00**
1100x1950 (8mm)	support bar	1062-1080mm	A	58.046	703.00	**864.69**
1200x1950 (8mm)	support bar	1162-1180mm	A	58.047	737.00	**906.51**
1400x1950 (8mm)	support bar	1362-1380mm	A	58.048	815.00	**1002.45**

Type A panels are fixed to the wall with a wall profile, the panel also comes with one wall support bar. A 300/400mm flipper kit can be installed retrospectively.

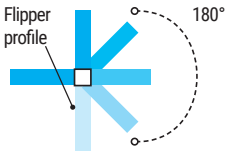

300/400mm Flipper kit can be added to any Valliant glass to convert to a flipper (see page 417).

Panel A
Comes with 1 wall profile and 1 support bar.

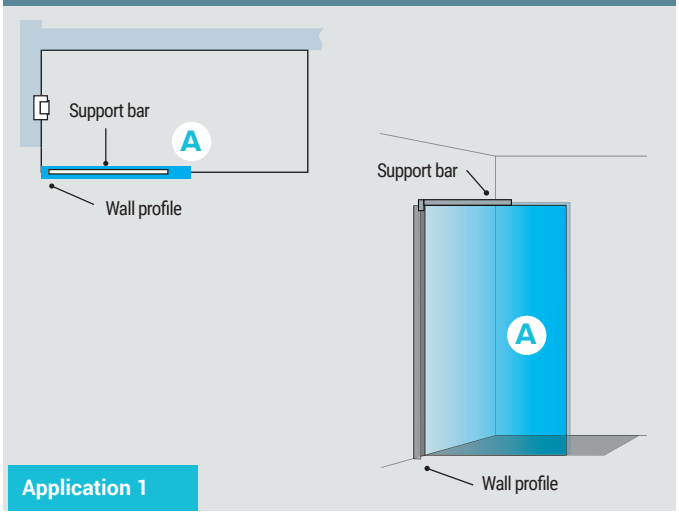

Application 1

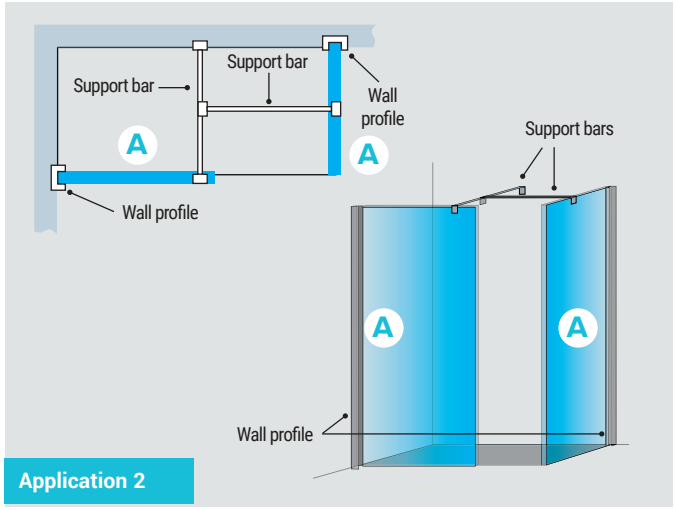

Application 2

Valliant Walk-In

VALLIANT - TYPE B

Tempered Glass - 8mm

1950 mm High



58.362 1200mm walk-in panel with two support bars (B)

Type B panels can only be used in a walk-through situation, the panel is a single pane of glass and comes with two wall support bars only. This can be used with two type C, 250mm panels, which contain a corner profile so they can be attached to the Type B panel or with the flipper kit, to create a 180 degree flipper panel. They can both be installed with a tray or in a wetroom situation.

FEATURES
- 10 Year manufacturer's guarantee*
- Easy clean glass
- 1950mm Height
- Trays available to match
- 8mm Tempered safety glass

*With conditions

Valliant Walk-in - Type B

Size	Includes	Glass Length	Type	Code	€ Ex VAT	€ Inc VAT
900x1950 (8mm)	2 x support bars	860mm	B	58.359	651.00	**800.73**
1000x1950 (8mm)	2 x support bars	960mm	B	58.360	686.00	**843.78**
1100x1950 (8mm)	2 x support bars	1060mm	B	58.361	724.00	**890.52**
1200x1950 (8mm)	2 x support bars	1160mm	B	58.362	765.00	**940.95**

Flipper kit can be installed retrospectively.

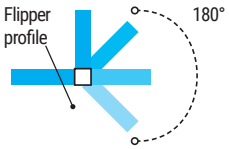

300/400mm Flipper kit can be added to any Valliant glass to convert to a flipper.

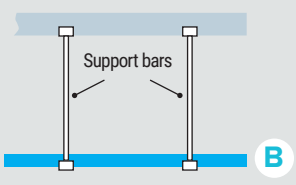

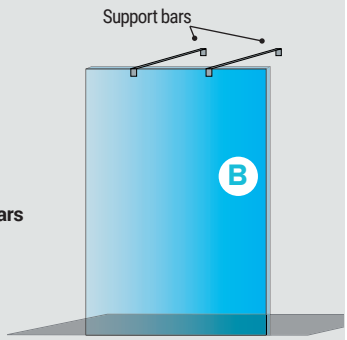

Panel B - Comes with 2 Support Bars
- 58.359 900 x 1950
- 58.360 1000 x 1950
- 58.361 1100 x 1950
- 58.362 1200 x 1950

* No wall profile supplied

VALLIANT - TYPE C

Tempered Glass - 8mm

1950 mm High



Combination B&C

58.362 1200mm walk-in panel with two support bars (B), 2 x 58.363 250mm end panels (C)

Type C is a single pane of glass with a corner profile, this can only be attached to another pane of glass (no wall support bar is provided with Type C). Type A & C can be used together to create different walk-in situations as illustrated. However please note the wall support bar from Type A can be used on either pane of glass to suit your requirements.

Valliant Walk-in - Type C**

Description	Type	Code	€ Ex VAT	€ Inc VAT
Valliant walkin 250x1950 C 8mm Silver	C	58.363	490.00	**602.70**
Valliant walkin support bar 900mm Silver	-	58.369	97.00	**119.31**
Valliant Flipper Kit 1950 x 300 Silver	-	58.044	185.00	**227.55**
Volente/Valliant ceiling support bar	-	58.816	152.00	**186.96**

300mm Flipper kit can be added to any Valliant glass to convert to a flipper.
**No support bar supplied. *Panel C comes with one corner profile. No wall profile supplied.

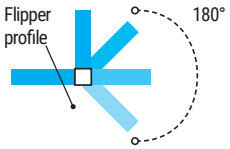

300/400mm Flipper kit can be added to any Valliant glass to convert to a flipper.

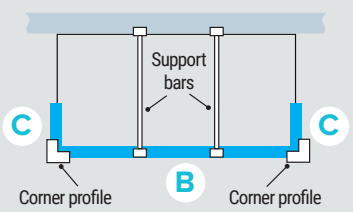

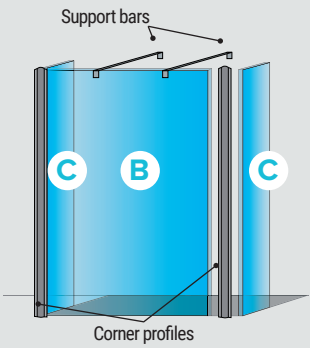

Panel C - Comes with 1 corner profile. No wall profile supplied.
- 58.363 250 x 1950

* B & C panels must be supported by the rim of the tray or the floor.

Valliant Walk-In

VALLIANT - TYPE D



58.351 800mm front panel with wall profile and 300mm flipper (D)

Type D contains a panel of glass with a wall profile, plus a 300mm flipper which is hinged and rotates 180 degrees. Type D must be fixed to the wall, it cannot be fixed to another pane of glass.

FEATURES
- 10 Year manufacturer's guarantee*
- 1950mm Height
- Trays available to match
- 8mm Tempered safety glass

*With conditions

Valliant Walk-in - Type D

Fixed Panel Size	Flipper Size	Adjustment	Type	Code	€ Ex VAT	€ Inc VAT
600x1950 (8mm)	300 Flipper	582-600mm	D	58.350	745.00	**916.35**
800x1950 (8mm)	300 Flipper	782-800mm	D	58.351	829.00	**1019.67**
900x1950 (8mm)	300 Flipper	882-900mm	D	58.352	868.00	**1067.64**
1100x1950 (8mm)	300 Flipper	1082-1100mm	D	58.353	945.00	**1162.35**
1200x1950 (8mm)	300 Flipper	1182-1200mm	D	58.690	968.00	**1190.64**

Accessories

Size	Code	€ Ex VAT	€ Inc VAT
Valliant walkin support bar 9mm	58.369	97.00	**119.31**
Valliant flipper kit 1950x300	58.044	185.00	**227.55**
Valliant flipper kit 1950x400	58.819	234.00	**287.82**
Volente/Valliant ceiling support bar	58.816	152.00	**186.96**

300/400mm Flipper kit can be added to any Valliant glass to convert to a flipper.

Panel D
Comes with 1 wall profile, support bar and a 300mm flipper.

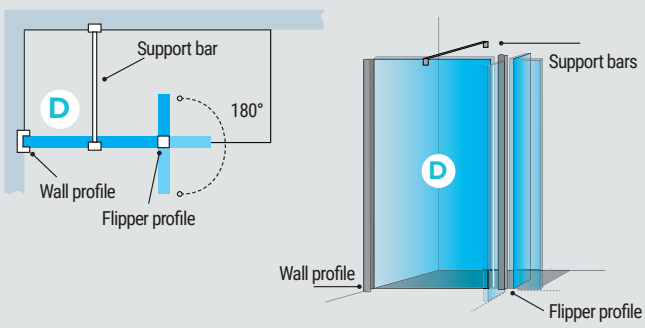

VALLIANT - TYPE A&D



58.357 900mm side panel including support bar and wall profile (A), 58.351 800mm front panel with wall profile and 300mm flipper (D)

Type A panels are fixed to the wall with a wall profile, the panel also comes with a wall support bar and are shown here as end panels. Type D contains a panel of glass with a wall profile, plus a 300mm flipper which is hinged and rotates 180 degrees. Type D must be fixed to the wall and it cannot be fixed to another pane of glass.

Valliant Walk-in - Type A

Size	Includes	Adjustment	Type	Code	€ Ex VAT	€ Inc VAT
300x1950 (8mm)	support bar	282-300mm	A	58.103	406.00	**499.38**
500x1950 (8mm)	support bar	482-500mm	A	58.689	450.00	**553.50**
700x1950 (8mm)	support bar	662-680mm	A	58.354	598.00	**735.54**
760x1950 (8mm)	support bar	722-740mm	A	58.355	608.00	**747.84**
800x1950 (8mm)	support bar	762-780mm	A	58.356	621.00	**763.83**
900x1950 (8mm)	support bar	862-880mm	A	58.357	660.00	**811.80**
1000x1950 (8mm)	support bar	962-980mm	A	58.358	700.00	**861.00**
1100x1950 (8mm)	support bar	1062-1080mm	A	58.046	703.00	**864.69**
1200x1950 (8mm)	support bar	1162-1180mm	A	58.047	737.00	**906.51**
1400x1950 (8mm)	support bar	1362-1380mm	A	58.048	815.00	**1002.45**

Valliant Walk-in - Type D

Fixed Panel Size	Flipper Size	Adjustment	Type	Code	€ Ex VAT	€ Inc VAT
600x1950 (8mm)	300 Flipper	582-600mm	D	58.350	745.00	**916.35**
800x1950 (8mm)	300 Flipper	782-800mm	D	58.351	829.00	**1019.67**
900x1950 (8mm)	300 Flipper	882-900mm	D	58.352	868.00	**1067.64**
1100x1950 (8mm)	300 Flipper	1082-1100mm	D	58.353	945.00	**1162.35**
1200x1950 (8mm)	300 Flipper	1182-1200mm	D	58.690	968.00	**1190.64**

Panel A
Comes with 1 wall profile and 1 support bar.

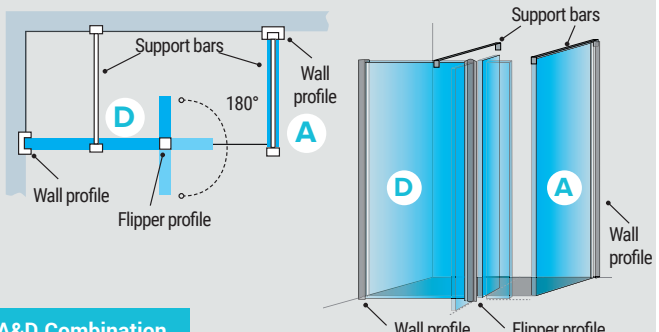

A&D Combination

Valliant Walk-In

VALLIANT - TYPE A&C - COMBINATIONS



Application 1

58.357 900mm side panel including support bar and wall profile (A), 58.367 900mm end panel with corner profile (C)



Application 2

58.367 900mm end panel with corner profile (C), 2 x 58.357 900mm side panel including support bar and wall profile (A)

Type C is a single pane of glass with a corner profile, this can only be attached to another pane of glass (no wall support bar is provided with Type C). Type A & C can be used together to create different walk-in situations as illustrated, can also install a 180 degree flipper kit retrospectively. However please note the wall support bar from Type A can be used on either pane of glass to suit your requirements.

Valliant Walk-in - Type C

Size	Includes	Glass Length	Type	Code	€ Ex VAT	€ Inc VAT
250x1950 (8mm)	Corner Profile	250mm	C*	58.363	490.00	**602.70**
700x1950 (8mm)	Corner Profile	650mm	C*	58.364	521.00	**640.83**
760x1950 (8mm)	Corner Profile	710mm	C*	58.365	531.00	**653.13**
800x1950 (8mm)	Corner Profile	750mm	C*	58.366	537.00	**660.51**
900x1950 (8mm)	Corner Profile	850mm	C*	58.367	581.00	**714.63**
1000x1950 (8mm)	Corner Profile	950mm	C*	58.368	615.00	**756.45**

*No wall support bar is provided with Type C

Accessories

Size	Code	€ Ex VAT	€ Inc VAT
Valliant walkin support bar 9mm	58.369	97.00	**119.31**
Valliant flipper kit 1950x300	58.044	185.00	**227.55**
Valliant flipper kit 1950x400	58.819	234.00	**287.82**
Volente/Valliant ceiling support bar	58.816	152.00	**186.96**

Valliant Walk-in - Type A

Size	Includes	Adjustment	Type	Code	€ Ex VAT	€ Inc VAT
300x1950 (8mm)	support bar	282-300mm	A	58.103	406.00	**499.38**
500x1950 (8mm)	support bar	482-500mm	A	58.689	450.00	**553.50**
700x1950 (8mm)	support bar	662-680mm	A	58.354	598.00	**735.54**
760x1950 (8mm)	support bar	722-740mm	A	58.355	608.00	**747.84**
800x1950 (8mm)	support bar	762-780mm	A	58.356	621.00	**763.83**
900x1950 (8mm)	support bar	862-880mm	A	58.357	660.00	**811.80**
1000x1950 (8mm)	support bar	962-980mm	A	58.358	700.00	**861.00**
1100x1950 (8mm)	support bar	1062-1080mm	A	58.046	703.00	**864.69**
1200x1950 (8mm)	support bar	1162-1180mm	A	58.047	737.00	**906.51**
1400x1950 (8mm)	support bar	1362-1380mm	A	58.048	815.00	**1002.45**

Valliant Walk-in - Type C

Size	Includes	Glass Length	Type	Code	€ Ex VAT	€ Inc VAT
250x1950 (8mm)	Corner Profile	250mm	C*	58.363	490.00	**602.70**
700x1950 (8mm)	Corner Profile	650mm	C*	58.364	521.00	**640.83**
760x1950 (8mm)	Corner Profile	710mm	C*	58.365	531.00	**653.13**
800x1950 (8mm)	Corner Profile	750mm	C*	58.366	537.00	**660.51**
900x1950 (8mm)	Corner Profile	850mm	C*	58.367	581.00	**714.63**
1000x1950 (8mm)	Corner Profile	950mm	C*	58.368	615.00	**756.45**

*No wall support bar is provided with Type C
These panels must be supported by the rim of the tray or the floor

Panel C
Comes with 1 corner profile.

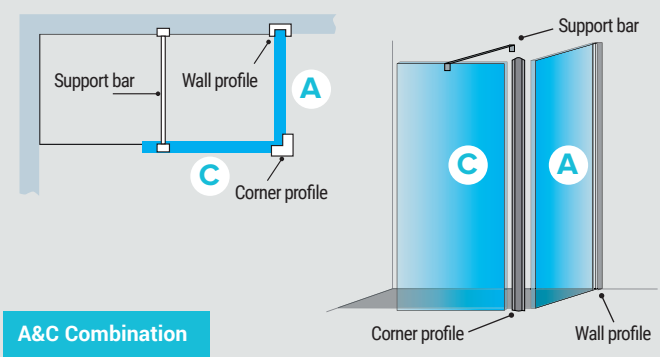

A&C Combination

Panel A
Comes with 1 wall profile and 1 support bar.

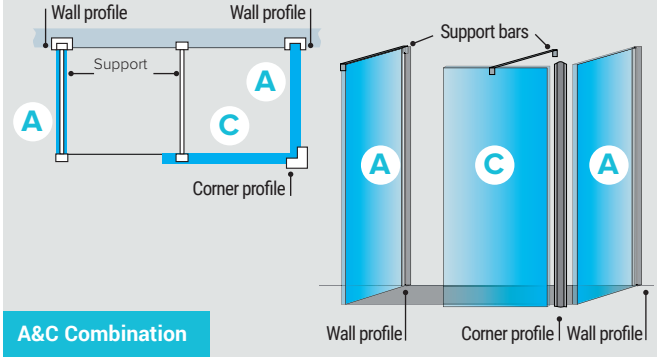

A&C Combination

Valliant Walk-In

VALLIANT - TYPE A&C - COMBINATION



Application 3

58.357 900mm side panel including support bar and wall profile (A), 58.363 250mm end panel with corner profile (C)

Type A panels are fixed to the wall with a wall profile, the panel also comes with one wall support bar. Type C is a single pane of glass with a corner profile, this can only be attached to another pane of glass (no support bar is provided with Type C). Type A & C can be used together to create different walk-in situations as illustrated - and can also be installed with a 180 degree flipper kit retrospectively. However please note the wall support bar from Type A can be used on either pane of glass to suit your requirements.

Valliant Walk-in - Type A

Size	Includes	Adjustment	Type	Code	€ Ex VAT	€ Inc VAT
300x1950 (8mm)	support bar	282-300mm	A	58.103	406.00	**499.38**
500x1950 (8mm)	support bar	482-500mm	A	58.689	450.00	**553.50**
700x1950 (8mm)	support bar	662-680mm	A	58.354	598.00	**735.54**
760x1950 (8mm)	support bar	722-740mm	A	58.355	608.00	**747.84**
800x1950 (8mm)	support bar	762-780mm	A	58.356	621.00	**763.83**
900x1950 (8mm)	support bar	862-880mm	A	58.357	660.00	**811.80**
1000x1950 (8mm)	support bar	962-980mm	A	58.358	700.00	**861.00**
1100x1950 (8mm)	support bar	1062-1080mm	A	58.046	703.00	**864.69**
1200x1950 (8mm)	support bar	1162-1180mm	A	58.047	737.00	**906.51**
1400x1950 (8mm)	support bar	1362-1380mm	A	58.048	815.00	**1002.45**

Valliant Walk-in - Type C

Size	Includes	Glass Length	Type	Code	€ Ex VAT	€ Inc VAT
250x1950 (8mm)	Corner Profile	250mm	C*	58.363	490.00	**602.70**
700x1950 (8mm)	Corner Profile	650mm	C*	58.364	521.00	**640.83**
760x1950 (8mm)	Corner Profile	710mm	C*	58.365	531.00	**653.13**
800x1950 (8mm)	Corner Profile	750mm	C*	58.366	537.00	**660.51**
900x1950 (8mm)	Corner Profile	850mm	C*	58.367	581.00	**714.63**
1000x1950 (8mm)	Corner Profile	950mm	C*	58.368	615.00	**756.45**

*No wall support bar is provided with Type C
These panels must be supported by the rim of the tray or the floor

Accessories

Size	Code	€ Ex VAT	€ Inc VAT
Valliant walkin support bar 900mm Silver	58.369	97.00	**119.31**
Valliant Flipper Kit 1950 x 300 Silver	58.044	185.00	**227.55**
Valliant Flipper Kit 1950 x 400	58.819	234.00	**287.82**
Volente/Valliant ceiling support bar	58.816	152.00	**186.96**

300/400mm Flipper kit can be added to any Valliant glass to convert to a flipper at time of installation or retrospectively. N.B 58.816 Ceiling support arm is 580mm in length and can be cut down.

Panel A
Comes with 1 wall profile and 1 support bar.

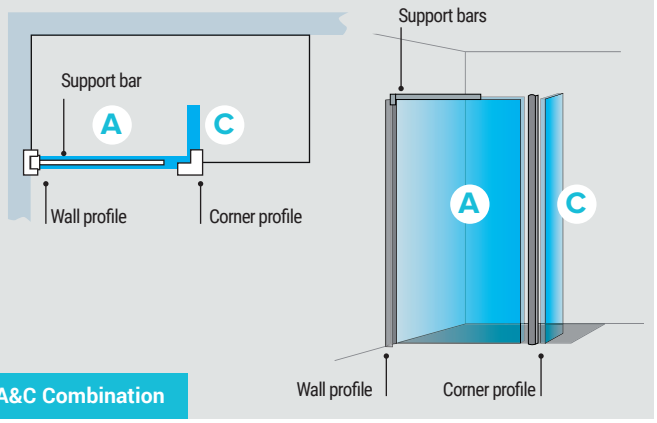

A&C Combination

58.816

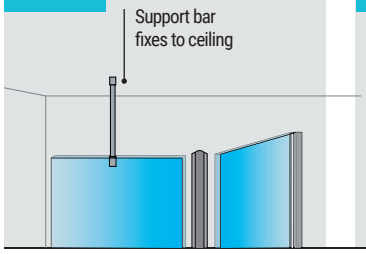

58.369

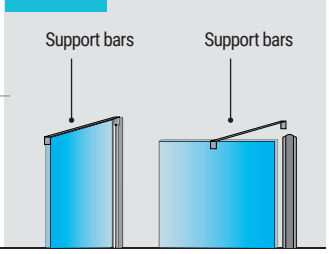

A new range of accessories for the Valliant Walk-ins includes a wall support bar which fixes directly to the wall, a 300mm and 400mm Flipper kit which can be added to any Valliant glass panel to convert to a flipper, and a ceiling support bar which fixes the glass panel to the ceiling.

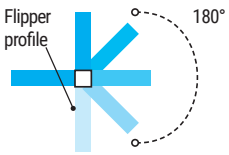

300/400mm Flipper kit can be added to any Valliant glass to convert to a flipper.

Volente Walk-In

VOLENTE WALK-IN - CLEAR GLASS



PANELS

Volente Walk-In - Clear Glass

Size	Adjustment	Code	€ Ex VAT	€ Inc VAT
500mm front panel	472-490mm	58.688	392.00	**482.16**
700mm front panel	672-690mm	58.614	462.00	**568.26**
760mm front panel	732-750mm	58.615	462.00	**568.26**
800mm front panel	772-790mm	58.616	462.00	**568.26**
900mm front panel	872-890mm	58.611	481.00	**591.63**
1000mm front panel	972-990mm	58.612	516.00	**634.68**
1200mm front panel	1172-1190mm	58.613	581.00	**714.63**

All panels come with one support bar.

EXTRAS

End Panels - Clear Glass

Size	Adjustment	Code	€ Ex VAT	€ Inc VAT
300mm end panel	272-290mm	58.102	360.00	**442.80**
500mm end panel	472-490mm	58.688	392.00	**482.16**
700mm end panel	672-690mm	58.614	462.00	**568.26**
760mm end panel	732-750mm	58.615	462.00	**568.26**
800mm end panel	772-790mm	58.616	462.00	**568.26**
900mm end panel	872-890mm	58.611	481.00	**591.63**

All panels come with one support bar.

Volente Extras

Description	Code	€ Ex VAT	€ Inc VAT
Valliant Walkin support bar 900mm	58.369	97.00	**119.31**
Volente Flipper Kit 1850 x 300*	58.817	167.00	**205.41**
Volente Flipper Kit 1850 x 400*	58.818	178.00	**218.94**
Volente /Valliant ceiling support bar*	58.816	152.00	**186.96**

Flipper kit can be installed retrospectively.

Luxurious, easy to clean, contemporary framed enclosure in 6mm tempered safety glass, height 1850mm.

FEATURES

- 10 Year manufacturer's guarantee*
- Easy clean glass
- 6mm Tempered safety glass
- Clear glass - also available in frosted glass

*With conditions

*When fitting with two side panels one of the standard Volente side panels (P354) is used with one of the Volente walk-in end panels. The front panel may have to be downsized to ensure there is enough opening on the walk-in end panels. For further advice please contact our technical department on 01452 317 890.





Note: wall bracket can be fitted at 90° or parallel to the glass.

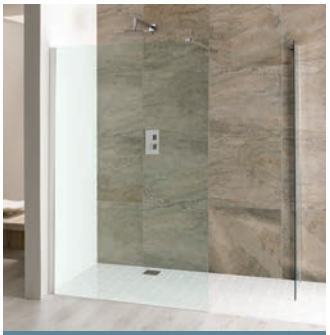

300mm panel allows greater access



Can be fitted with two side panels as shown*

Volente Walk-In

VOLENTE WALK-IN - FROSTED GLASS



PANELS

Volente Walk-In - Frosted Glass

Size	Adjustment	Code	€ Ex VAT	€ Inc VAT
500mm front panel	472-490mm	58.036	408.00	**501.84**
700mm front panel	672-690mm	58.033	450.00	**553.50**
760mm front panel	732-750mm	58.034	462.00	**568.26**
800mm front panel	772-790mm	58.035	476.00	**585.48**
900mm front panel	872-890mm	58.030	499.00	**613.77**
1000mm front panel	972-990mm	58.031	532.00	**654.36**
1200mm front panel	1172-1190mm	58.032	604.00	**742.92**

All panels come with one support bar.

EXTRAS

End Panels - Frosted Glass

Size	Adjustment	Code	€ Ex VAT	€ Inc VAT
300mm end panel	272-290mm	58.029	370.00	**455.10**
500mm end panel	472-490mm	58.036	408.00	**501.84**
700mm end panel	672-690mm	58.033	450.00	**553.50**
760mm end panel	732-750mm	58.034	462.00	**568.26**
800mm end panel	772-790mm	58.035	476.00	**585.48**
900mm end panel	872-890mm	58.030	499.00	**613.77**

All panels come with one support bar.

Luxurious, easy to clean, contemporary framed enclosure in 6mm tempered safety glass, height 1850mm.

FEATURES

- 10 Year manufacturer's guarantee*
- Easy clean glass
- 6mm Tempered safety glass
- Frosted glass - also available in clear glass

*With conditions

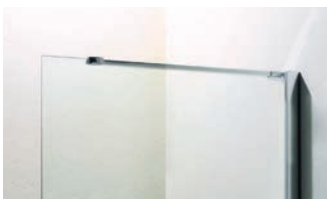



Note: wall bracket can be fitted at 90° or parallel to the glass.

EXTRAS

Volente Extras

Description	Code	€ Ex VAT	€ Inc VAT
Valliant Walkin support bar 900mm	58.369	97.00	**119.31**
Volente/Valliant ceiling support bar *	58.816	152.00	**186.96**

Flipper kit can be installed retrospectively. Not available in frosted.

Corniche Walk-In

CORNICHE WALK-IN



Corniche walk-in shower with side panel. 1950mm high with 8mm tempered safety glass (BS EN12150) and a 550mm opening. Front panel comes with wall fixing, end panel comes with connecting bar.

FEATURES

- Easy clean glass
- Top cover cap
- Trays available to match
- 8mm Tempered safety glass
- 10 Year manufacturer's guarantee*
  *With conditions

PANELS

Corniche 8mm Walk-In Panels

Size	Adjustment	Code	€ Ex VAT	€ Inc VAT
850 Front panel for 1400 tray	840-850mm	69.0116	591.00	**726.93**
950 Front panel for 1500 tray	940-950mm	69.0118	629.00	**773.67**
1150 Front panel for 1700 tray	1140-1150mm	69.0119	686.00	**843.78**
End panel for 700	690-700mm	69.0121	506.00	**622.38**
End panel for 760	750-760mm	69.0122	530.00	**651.90**
End panel for 800	790-800mm	69.0120	570.00	**701.10**



Vantage Walk-In

VANTAGE FLIPPER WALK-IN



These walk-in shower panels with hinged flipper panel are suitable for use in an alcove three sided situation without the side panel. They are 6mm tempered safety glass, with a flipper height of 1950mm, and allow a 600mm opening. Will fit all Eastbrook trays or a wet room situation.

FEATURES

• 10 Year manufacturer's guarantee* • Easy clean glass • 6mm Tempered safety glass *With conditions

PANELS

Vantage 8mm Walk-In Panels

Size	Adjustment	Code	€ Ex VAT	€ Inc VAT
600mm Front panel with flipper for 1200 tray*	580-600mm	69.0129	857.00	**1054.11**
800mm Front panel with flipper for 1400 tray*	780-800mm	69.0130	906.00	**1114.38**
900mm Front panel with flipper for 1500 tray*	880-900mm	69.0131	943.00	**1159.89**
1100mm Front panel with flipper for 1700 tray*	1080-1100mm	69.0132	997.00	**1226.31**
700mm side panel	680-700mm	69.0135	299.00	**367.77**
760mm side panel	740-760mm	69.0136	313.00	**384.99**
800mm side panel	780-800mm	69.0133	458.00	**563.34**
900mm side panel	880-900mm	69.0134	481.00	**591.63**



Vantage Walk-In

VANTAGE 2000 | 6MM WALK-IN PANEL - CHROME

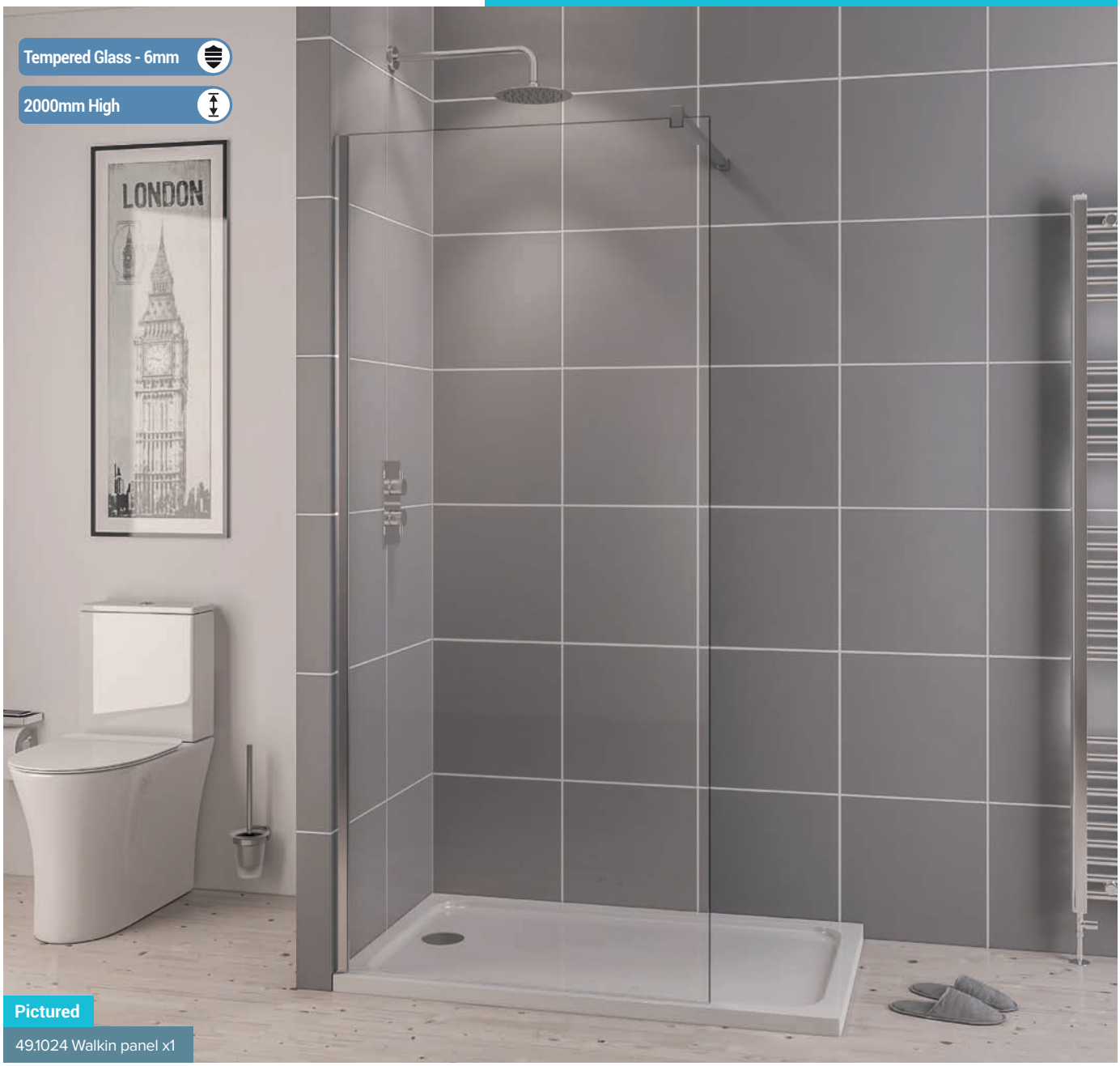

These walk-in (all sizes) shower panels are suitable for use in an alcove three sided situation without the second walk-in panel. They are 6mm tempered safety glass, with an overall height of 2000mm. Will fit all Eastbrook trays or a wet room situation and comes with a support bar.

FEATURES

• 10 Year manufacturer's guarantee* • Easy clean glass • 2000mm Height • 6mm Tempered safety glass • Fully concealed fixings *With conditions

PANELS

Vantage 2000 - 6mm Walk-In Panels

Size	Adjustment	Code	€ Ex VAT	€ Inc VAT
Vantage 2000 6mm walkin panel 300 x 2000	275 - 290mm	49.1018	203.00	**249.69**
Vantage 2000 6mm walkin panel 500 x 2000	475 - 490mm	49.1019	268.00	**329.64**
Vantage 2000 6mm walkin panel 700 x 2000	675 - 690mm	49.1020	329.00	**404.67**
Vantage 2000 6mm walkin panel 760 x 2000	735 - 750mm	49.1021	352.00	**432.96**
Vantage 2000 6mm walkin panel 800 x 2000	775 - 790mm	49.1022	360.00	**442.80**
Vantage 2000 6mm walkin panel 900 x 2000	875 - 890mm	49.1023	391.00	**480.93**
Vantage 2000 6mm walkin panel 1000 x 2000	975 - 990mm	49.1024	436.00	**536.28**
Vantage 2000 6mm walkin panel 1200 x 2000	1175 - 1190mm	49.1026	497.00	**611.31**

Vantage 2000 Walk-In

VANTAGE 2000 | 8MM WALK-IN PANEL - CHROME





Create a full Vantage 2000 chrome enclosure space by adding an 8mm flipper panel and another two walk-in panels (right hand image). All panels are 8mm tempered safety glass, with a flipper height of 2000mm. Suitable for all Eastbrook trays or wet floor systems and comes with a support bar.

FEATURES

• 10 Year manufacturer's guarantee* • Easy clean glass • 2000mm Height • 8mm Tempered safety glass • Fully concealed fixings *With conditions

PANELS

Vantage 2000 | 8mm Walk-In Panels - Chrome

Size	Adjustment	Code	€ Ex VAT	€ Inc VAT
Vantage 2000 8mm walkin panel 300 x 2000	275 - 290mm	49.1030	208.00	**255.84**
Vantage 2000 8mm walkin panel 500 x 2000	475 - 490mm	49.1031	289.00	**355.47**
Vantage 2000 8mm walkin panel 700 x 2000	675 - 690mm	49.1032	362.00	**445.26**
Vantage 2000 8mm walkin panel 760 x 2000	735 - 750mm	49.1033	388.00	**477.24**
Vantage 2000 8mm walkin panel 800 x 2000	775 - 790mm	49.1034	397.00	**488.31**
Vantage 2000 8mm walkin panel 900 x 2000	875 - 890mm	49.1035	432.00	**531.36**
Vantage 2000 8mm walkin panel 1000 x 2000	975 - 990mm	49.1036	482.00	**592.86**
Vantage 2000 8mm walkin panel 1100 x 2000	1075 - 1090mm	49.1037	517.00	**635.91**
Vantage 2000 8mm walkin panel 1200 x 2000	1175 - 1190mm	49.1038	552.00	**678.96**
Vantage 2000 8mm walkin panel 1400 x 2000	1375 - 1390mm	49.1040	623.00	**766.29**
Vantage 2000 8mm walkin panel 1600 x 2000	1575 - 1590mm	49.1100	713.00	**876.99**

Accessories - Chrome

Size	Code	€ Ex VAT	€ Inc VAT
Vantage 2000 8mm flipper panel 300 x 2000	49.1093	189.00	**232.47**
Vantage 2000 T-Piece Connector (Chrome)	49.1098	14.00	**17.22**



49.1098 T-Piece connector

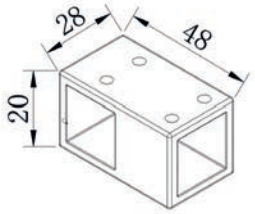

Vantage 2000 Walk-In

VANTAGE 2000 | 8MM WALK-IN PANEL - MATT BLACK





Create a full Vantage 2000 matt black enclosure space by adding an 8mm flipper panel and another two walk-in panels (right hand image). All panels are 8mm tempered safety glass, with a flipper height of 2000mm. Suitable for all Eastbrook trays or wet floor systems and comes with a support bar.

FEATURES

- 10 Year manufacturer's guarantee* With conditions
- Easy clean glass
- 2000mm Height
- 8mm Tempered safety glass
- Fully concealed fixings
- Anodized Matt Black finish

PANELS

Vantage 2000 | 8mm Walk-In Panels - Matt Black

Size	Adjustment	Code	€ Ex VAT	€ Inc VAT
Vantage 2000 8mm walkin panel 300 x 2000	275 - 290mm	49.1054	216.00	**265.68**
Vantage 2000 8mm walkin panel 500 x 2000	475 - 490mm	49.1055	289.00	**355.47**
Vantage 2000 8mm walkin panel 700 x 2000	675 - 690mm	49.1056	362.00	**445.26**
Vantage 2000 8mm walkin panel 760 x 2000	735 - 750mm	49.1057	388.00	**477.24**
Vantage 2000 8mm walkin panel 800 x 2000	775 - 790mm	49.1058	397.00	**488.31**
Vantage 2000 8mm walkin panel 900 x 2000	875 - 890mm	49.1059	432.00	**531.36**
Vantage 2000 8mm walkin panel 1000 x 2000	975 - 990mm	49.1060	482.00	**592.86**
Vantage 2000 8mm walkin panel 1100 x 2000	1075 - 1090mm	49.1061	517.00	**635.91**
Vantage 2000 8mm walkin panel 1200 x 2000	1175 - 1190mm	49.1062	552.00	**678.96**
Vantage 2000 8mm walkin panel 1400 x 2000	1375 - 1390mm	49.1064	623.00	**766.29**
Vantage 2000 8mm walkin panel 1600 x 2000	1575 - 1590mm	49.1099	713.00	**876.99**

Accessories - Matt Black

Size	Code	€ Ex VAT	€ Inc VAT
Vantage 2000 8mm flipper panel 300 x 2000	49.1094	198.00	**243.54**
Vantage 2000 T-Piece connector (Matt Black)	49.1097	14.00	**17.22**

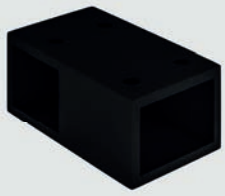

49.1097 T-Piece connector

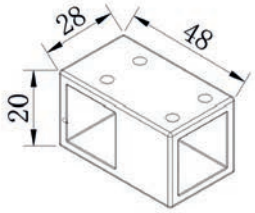

Vantage 2000 Walk-In

VANTAGE 2000 | 8MM FRAMED WALK-IN PANEL - MATT BLACK



The 8mm Framed Walk-in panels are suitable for use either in an alcove situation with one panel, or in a corner solution by adding a second walk in panel.
Will fit all Eastbrook trays of the appropriate size, and can also be used in a wet room situation.

FEATURES

- 10 Year manufacturer's guarantee*
- Easy clean glass
- 8mm Tempered safety glass
- Fully concealed fixings
- Anodized Matt Black finish

*With conditions

PANELS

Vantage 2000 - 8mm Framed Walk-In Panels

Size	Adjustment	Code	€ Ex VAT	€ Inc VAT
Vantage 2000 8mm Matt black framed walkin panel 300 x 2000	275 - 290	49.1079	229.00	**281.67**
Vantage 2000 8mm Matt black framed walkin panel 500 x 2000	475 - 490	49.1080	311.00	**382.53**
Vantage 2000 8mm Matt black framed walkin panel 700 x 2000	675 - 690	49.1081	391.00	**480.93**
Vantage 2000 8mm Matt black framed walkin panel 760 x 2000	735 - 750	49.1082	419.00	**515.37**
Vantage 2000 8mm Matt black framed walkin panel 800 x 2000	775 - 790	49.1083	430.00	**528.90**
Vantage 2000 8mm Matt black framed walkin panel 900 x 2000	875 - 890	49.1084	469.00	**576.87**
Vantage 2000 8mm Matt black framed walkin panel 1000 x 2000	975 - 990	49.1085	521.00	**640.83**
Vantage 2000 8mm Matt black framed walkin panel 1100 x 2000	1075 - 1090	49.1086	562.00	**691.26**
Vantage 2000 8mm Matt black framed walkin panel 1200 x 2000	1175 - 1190	49.1087	601.00	**739.23**
Vantage 2000 8mm Matt black framed walkin panel 1400 x 2000	1375 - 1390	49.1089	681.00	**837.63**

Accessories - Matt Black

Size	Code	€ Ex VAT	€ Inc VAT
Vantage 2000 T-Piece connector (Matt Black)	49.1097	14.00	**17.22**

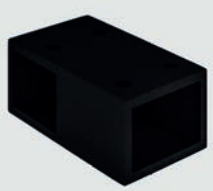

49.1097 T-Piece connector

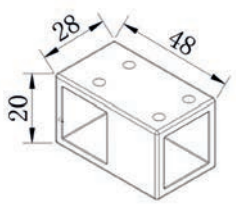

Vantage 2000 Walk-In

VANTAGE 2000 | 8MM FRAMED WALK-IN PANEL - MATT BLACK



Pictured

49.1086 Walkin panel x1, 49.1084 Walkin panel x1 & 46.1097 T-Piece

Valliant Walk-In

VALLIANT ROUND POLE WALK-IN



The Valliant Walk In with ceiling fixing pole. This range does away with the intrusive overhead wall bars and fixes straight up to the ceiling. Shown in a wet room situation but can also be fitted with a shower tray. Suitable for ceiling heights of up to 2500mm.

FEATURES

- 10 Year manufacturer's guarantee*
- 8mm Tempered safety glass
- Easy clean glass
- Polished Chrome

*With conditions

Valliant Round Pole Walk-In Panels

Size	Adjustment	Code	€ Ex VAT	€ Inc VAT
500mm Front panel	490-500mm	69.0047	482.00	**592.86**
700mm Front panel	690-700mm	69.0048	514.00	**632.22**
760mm Front panel	750-760mm	69.0049	523.00	**643.29**
800mm Front panel	790-800mm	69.0050	531.00	**653.13**
900mm Front panel	890-900mm	69.0051	548.00	**674.04**
1000mm Front panel	990-1000mm	69.0052	576.00	**708.48**
1200mm Front panel	1190-1200mm	69.0053	608.00	**747.84**
1400mm Front panel	1390-1400mm	69.0054	628.00	**772.44**

VALLIANT SQUARE POLE WALK-IN



PANELS

Valliant Square Pole Walk-In Panels

Size	Adjustment	Code	€ Ex VAT	€ Inc VAT
500mm Front panel	490-500mm	69.0039	476.00	**585.48**
700mm Front panel	690-700mm	69.0040	507.00	**623.61**
760mm Front panel	750-760mm	69.0041	518.00	**637.14**
800mm Front panel	790-800mm	69.0042	527.00	**648.21**
900mm Front panel	890-900mm	69.0043	542.00	**666.66**
1000mm Front panel	990-1000mm	69.0044	562.00	**691.26**
1200mm Front panel	1190-1200mm	69.0045	605.00	**744.15**
1400mm Front panel	1390-1400mm	69.0046	622.00	**765.06**

EXTRAS

Accessories

Description	Code	€ Ex VAT	€ Inc VAT
Flipper for Straight Square Pole 300 x 1950mm Silver	69.0155	366.00	450.18



Valliant Walk-In

VALLIANT ROUND POLE WALK-IN WITH HAND HOLD



FEATURES
- Suitable for ceiling heights of up to 3350mm
- 8mm tempered safety glass
- Easy clean glass
- 10 year manufacturers guarantee*
  *With conditions

Valliant Round Pole Walk-In with Hand Hold

Size	Adjustment	Code	€ Ex VAT	€ Inc VAT
800mm Valliant	780-800mm	58.831	419.00	**515.37**
900mm Valliant	880-900mm	58.832	451.00	**554.73**
1000mm Valliant	980-1000mm	58.833	482.00	**592.86**
1200mm Valliant	1180-1200mm	58.834	544.00	**669.12**

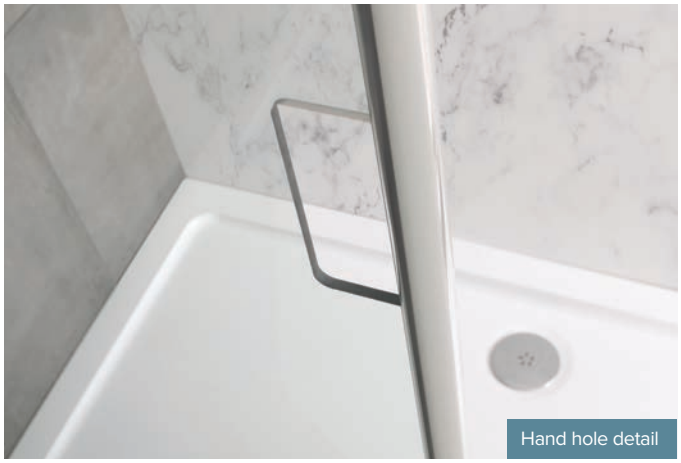
Hand hole detail

Valliant Walk-In

VALLIANT SQUARE POLE WALK-IN OFFSET

Tempered Glass - 6mm

1850 mm High



Now available with flipper



Suitable for wetrooms

PANELS

Valliant Square Pole Walk-In Panels

Size	Adjustment	Code	€ Ex VAT	€ Inc VAT
1000mm Offset panel	990-1000mm	69.0149	821.00	**1009.83**
1100mm Offset panel	1090-1100mm	69.0150	871.00	**1071.33**
1200mm Offset panel	1190-1200mm	69.0151	934.00	**1148.82**
1300mm Offset panel	1290-1300mm	69.0152	975.00	**1199.25**
1400mm Offset panel	1390-1400mm	69.0153	1031.00	**1268.13**

All panel sizes are suitable for all tray widths

EXTRAS

Accessories

Description	Code	€ Ex VAT	€ Inc VAT
Flipper for Offset Square Pole 300 x 1850mm Silver	69.0156	342.00	**420.66**

The Valliant Walk In with ceiling fixing pole. This range does away with the need for intrusive overhead wall bars and fixes straight up to the ceiling. Suitable for ceiling heights of up to 2500mm. 6mm tempered safety glass, height 1850mm. Now available with 300mm flipper.

FEATURES

- 10 Year manufacturer's guarantee*
- 6mm Tempered safety glass
- Easy clean glass
- Polished Chrome

*With conditions

Tray Width	Openings
700mm	400mm
760mm	460mm
800mm	500mm
900mm	600mm

NB Approximate, openings will vary depending on tray position/position of enclosure on tray/thickness of tiles. Opening is dependent on tray width not length. Refer to page 441 for available tray sizes.

Valliant Walk-In

VALLIANT ROUND POLE WALK-IN OFFSET

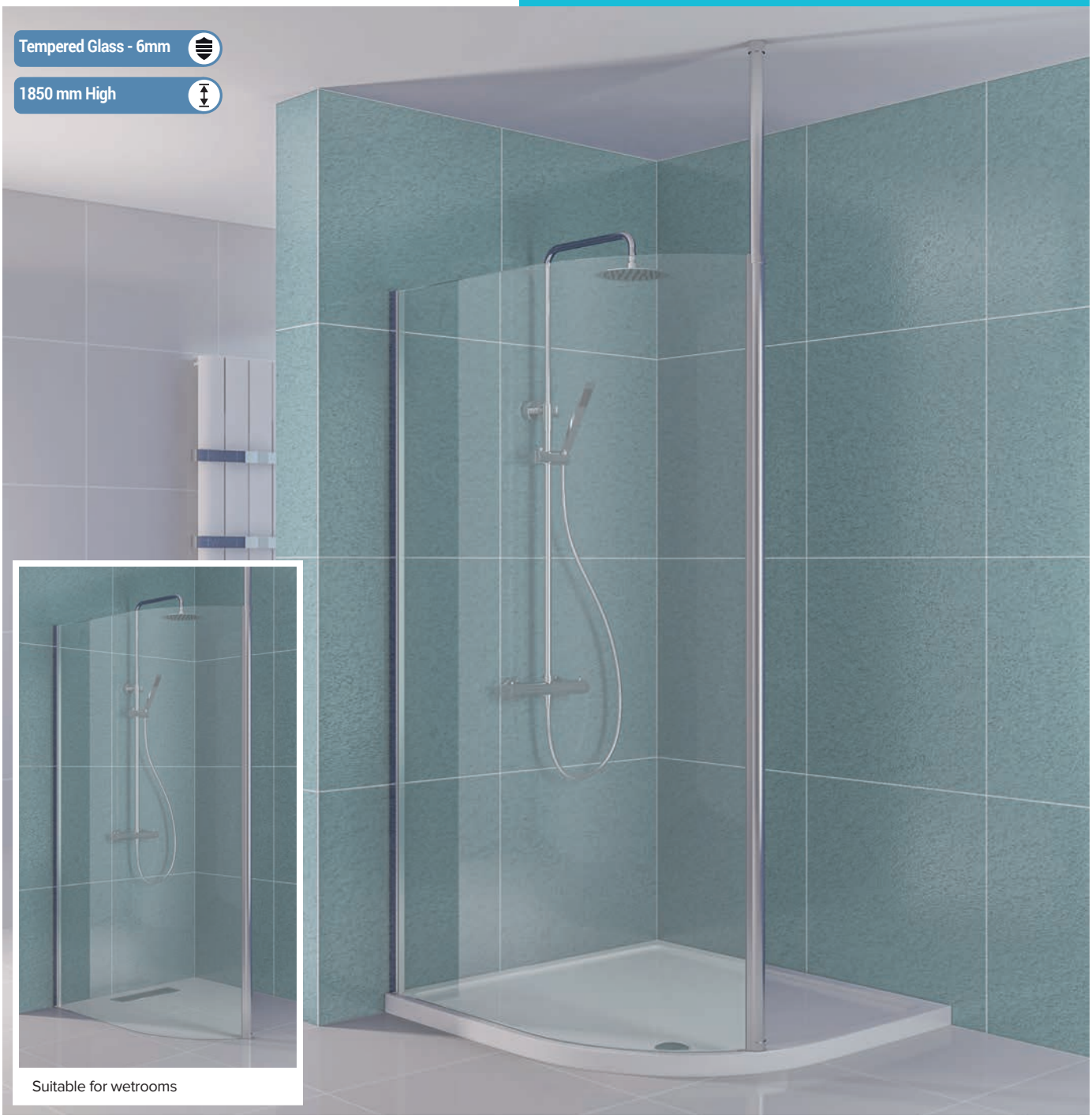

Suitable for wetrooms

PANELS

Valliant Round Pole Walk-In Panels

Size	Adjustment	Code	€ Ex VAT	€ Inc VAT
1000mm Offset panel	990-1000mm	69.0144	824.00	**1013.52**
1100mm Offset panel	1090-1100mm	69.0145	877.00	**1078.71**
1200mm Offset panel	1190-1200mm	69.0146	930.00	**1143.90**
1300mm Offset panel	1290-1300mm	69.0147	980.00	**1205.40**
1400mm Offset panel	1390-1400mm	69.0148	1032.00	**1269.36**

All panel sizes are suitable for all tray widths

The Valliant Walk In with ceiling fixing pole. This range does away with the need for intrusive overhead wall bars and fixes straight up to the ceiling. Suitable for ceiling heights of up to 2500mm. 6mm tempered safety glass, height 1850mm.

FEATURES

- 10 Year manufacturer's guarantee*
- 6mm Tempered safety glass
- Easy clean glass
- Polished Chrome

*With conditions

Tray Width	Openings
700mm	400mm
760mm	460mm
800mm	500mm
900mm	600mm

NB Approximate, openings will vary depending on tray position/position of enclosure on tray/thickness of tiles. Opening is dependant on tray width not length. Refer to page 441 for available tray sizes.

Biava Wet Floor System

BIAVA WET FLOOR

This product enables you to have a bathroom with a showering area at the same level as the rest of the room giving the benefit of complete level access. It is especially helpful for wheelchair users, the elderly and children. This affordable system incorporates the optimum gradient, drainage and waterproofing all in one package.

The product is able to incorporate benefits such as stylish and elegant designs, flexibility, ease of cleaning, level access, low maintenance with an amazing wow factor and rarely takes more than half a day to install. This proven system comes from a manufacturer with over 300,000 installations, available now through the Eastbrook Biava Brand, with its excellent backup and customer service. It will complement the eastbrook range of walk-in panels.





Frequently asked questions about the floor former:

What is a floor former?

A floor former is often mistaken for a shower tray but it is not, in fact it is a preformed floor base with a built in gradient. Its purpose is to offer a simple means of forming the gradient within the construction of either existing or new floors. On completion the floor former will be completely covered with tiles, with only the Stainless Steel Grate visible.

Does it have to be sunk into the floor?

The floor former has been designed to be recessed to a flush finish with the prepared floor. In circumstances where the floor cannot be breached the entire floor can be raised to accommodate the floor former.

How thick is it?

The floor former is 30mm thick.

Is it available in different sizes?

There are 4 different sizes:
1000mm x 1000mm
1200mm x 900mm
1400mm x 933mm
1600mm x 1067mm

Does it need to be fitted level?

It is extremely important that the floor former is fitted level. This is easily checked by placing a spirit level on the perimeter of both sides of the former. Because the gradient is built into the floor former it will only function properly if it is level around its perimeter.

How is the floor drain fitted?

The gully flange fits into the rebate making the top of the gully flange a flush fit with the surface of the floor former.

Is the gully cleanable from the top?

Yes, the gully is accessible from above meaning it can be cleaned without removing the entire drain. This is achieved by the removal of the grating or covers, followed by the dip tube, allowing easy access to the sump of the trap for cleaning.

What about different thicknesses of tiles?

To compensate for different thicknesses of tile the gully has a height adjustable ring which can take a tile thickness of between 6mm-16mm. Also included is a 10mm extension ring to increase the height up to 26mm if required.

What if there is a joist in the way of the gully?

The former has been designed with the waste off centre so that if a joist is in the way of the gully the floor former can be rotated either 90 or 180 degrees, which in most cases will reposition the gully away from the joist. A joist must never be notched or cut to allow installation of the trap.

Can it be fitted in timber floors?

Yes, the floor former is designed to be installed into timber floors. Please refer to the full installation instructions.

Can it be fitted in screeded or concrete floors?

Yes, the floor former can be installed into screeded or concrete floors. Please refer to the separate installation instructions available on request. Special care should be taken in this instance to avoid any obstructions such as cables or pipe work installed under the floor.

Can it be used with underfloor heating?

Yes, it is suitable for all types of underfloor heating.



Biava Wet Floor System

THE EASTBROOK BIAVA WET FLOOR SYSTEM CONSISTS OF:

The Biava Floor Former

There are several sizes of lightweight easy-to-install floor formers with 100% rigidity and a consistent 1:40 gradient. These formers feature a unique four way floor design giving the benefits of clear linear finish and very high flow rate of water to the drainage waste. They are also designed to fit on both timber joisted floors and concrete floors

1000x1000mm
65.0002 / 65.1002

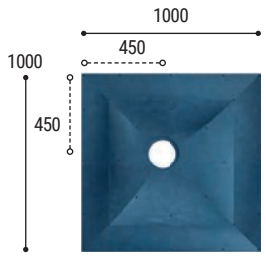

1200x900mm
65.0001 / 65.1001

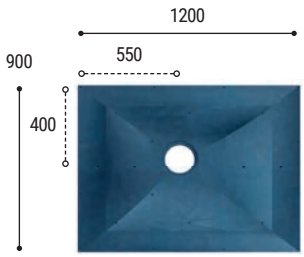

1400x933mm
65.0003 / 65.1003

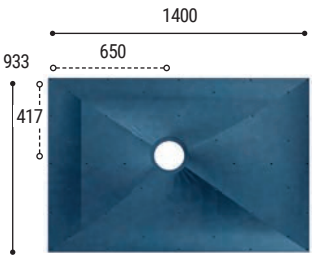

1600x1067mm
65.0004 / 65.1004

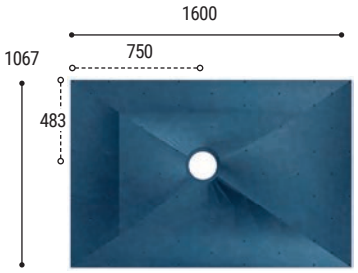

FLOOR FORMERS WITH STANDARD WASTE*

Accessories

Description	Code	€ Ex VAT	€ Inc VAT
Biava floor former 1200mm x 900mm inc waste	65.0001	969.00	**1191.87**
Biava floor former 1000mm x 1000mm inc waste	65.0002	1024.00	**1259.52**
Biava floor former 1400mm x 933mm inc waste	65.0003	1119.00	**1376.37**
Biava floor former 1600mm x 1067mm inc waste	65.0004	1211.00	**1489.53**
*Floor formers cannot be cut down			

FLOOR FORMERS WITH VINYL WASTE*

Accessories

Description	Code	€ Ex VAT	€ Inc VAT
Biava floor former 1200mm x 900mm inc vinyl waste	65.1001	1162.00	**1429.26**
Biava floor former 1000mm x 1000mm inc vinyl waste	65.1002	1216.00	**1495.68**
Biava floor former 1400mm x 933mm inc vinyl waste	65.1003	1314.00	**1616.22**
Biava floor former 1600mm x 1067mm inc vinyl waste	65.1004	1402.00	**1724.46**
*Floor formers cannot be cut down			

DRAINAGE WASTE

The shower waste drainage system is fully adjustable and flexible for those awkward joist situations that add so much installation time with other systems.

The waste is adjustable to take tiles from 6 - 26mm.
There is also an alternative solution for Vinyl floors.

Waste efficiency decreases when shower head is positioned directly above waste.





NB Drainage waste is included with the Biava floor former.

BIAVA 5M² MEMBRANE/TANKING KIT

The waterproof tanking kit is quick and easy to install and acts as a key for the tile adhesive as well as being the water proof barrier. Can be bought and used separately to waterproof any bathroom without the need to use a floor former. With some quick set adhesives, tiling can begin almost immediately.

FEATURES
- Quick & easy to install
- 5 metre kit includes joint tape, 4 internal corners and 1 external corner
- 10 year warranty



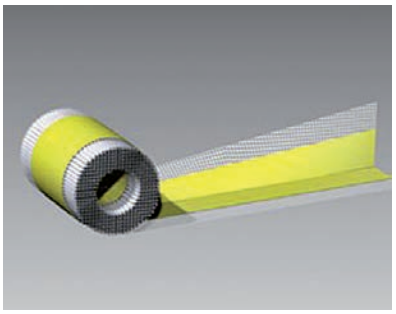

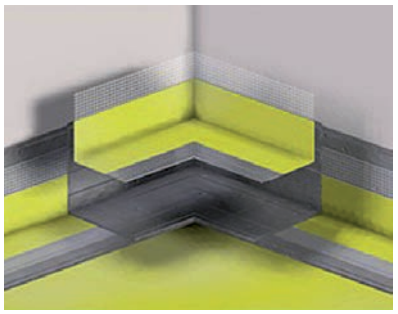

MEMBRANE / TANKING KIT

Accessories

Description	Code	€ Ex VAT	€ Inc VAT
Biava 5m2 Membrane kit	65.0005	488.00	**600.24**

Volente Trays

VOLENTE SQUARE SHOWER TRAYS



Panels/plinths can only be fitted as illustrated

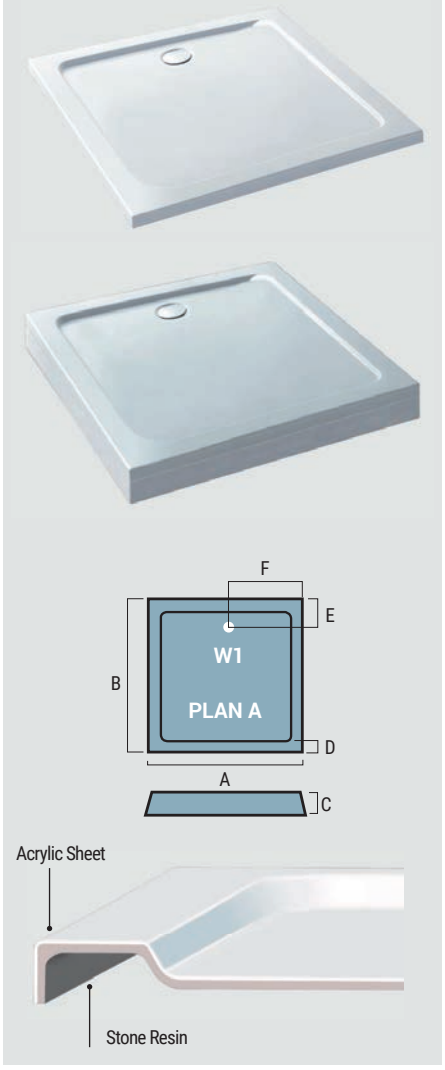

TRAYS

Square Volente Tray

Size	Plan	Waste Position	Waste Size	A	B	C	D	E	F	Code	€ Ex VAT	€ Inc VAT
700 x 700	A	W1	90	700	700	40	65	190	350	158.651	220.00	**270.60**
760 x 760	A	W1	90	760	760	40	65	190	380	158.050	245.00	**301.35**
800 x 800	A	W1	90	800	800	40	65	190	400	158.051	265.00	**325.95**
900 x 900	A	W1	90	900	900	40	65	190	450	158.052	292.00	**359.16**
1000 x 1000	A	W1	90	1000	1000	40	65	190	500	158.053	357.00	**439.11**
1100 x 1100	A	W1	90	1100	1100	40	65	190	550	158.691	398.00	**489.54**
1200 x 1200	A	W1	90	1200	1200	40	65	190	600	158.692	427.00	**525.21**

Waste sold separately.

EXTRAS

Legs, Panel Packs & Seal Strip

Description	Code	€ Ex VAT	€ Inc VAT
Volente legs & panels for up to 1200x1200 rectangular trays	158.080	112.00	**137.76**
1200 Tray Panel - only for three sided installation	158.682	47.00	**57.81**
2.8m Flexi Versatile Sealstrip	30.5012	27.00	**33.21**
Flexible waste pipe	30.400B	24.00	**29.52**

Panel height 95mm, adjustable legs 85-105mm. *Does not include flexible waste pipe (30.400B)

Chrome Shower Waste

Description	Code	€ Ex VAT	€ Inc VAT
Mega flow shower waste	12.040	37.00	**45.51**
Volente Luxury Shower Waste Chrome	41.5000	44.00	**54.12**

Waste efficiency decreases when shower head is positioned directly above waste.



A versatile range of trays that combines the durability and warmth of an acrylic top surface with the rigidity and solid feel of stone resin. Can be installed using the appropriate leg and panel pack for even greater ease of fitting.

FEATURES

- 40% Lighter than a high wall stone resin tray
- Reinforced high strength resin marble material
- Made with WRAS approved resins

Volente Trays

VOLENTE QUADRANT SHOWER TRAYS



Shown below with legs and panel pack, seal strip, flexible waste pipe and waste, which are all sold separately.

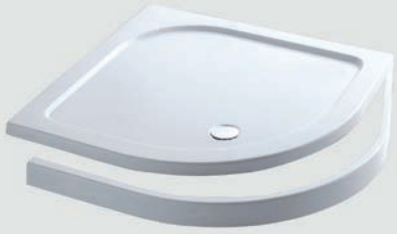



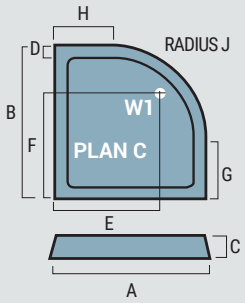

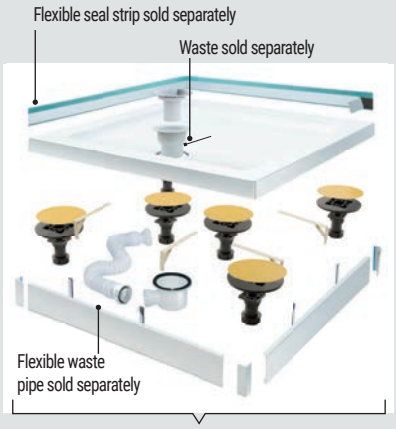

TRAYS

Quadrant Volente Tray

Size	Plan	Waste Position	Waste Size	A	B	C	D	E	F	G	H	J	Code	€ Ex VAT	€ Inc VAT
800 x 800	C	W1	90	800	800	40	65	500	500	250	250	550	158.062	258.00	**317.34**
900 x 900	C	W1	90	900	900	40	65	600	600	350	350	550	158.063	299.00	**367.77**
1000 x 1000	C	W1	90	1000	1000	40	65	700	700	450	450	550	158.064	353.00	**434.19**

Waste sold separately.

EXTRAS

Legs, Panel Packs & Seal Strip

Description	Code	€ Ex VAT	€ Inc VAT
Volente legs & panel quad trays up to 1200 x 900	158.081	112.00	**137.76**
Volente legs & panel for quad trays over 1200	158.085	136.00	**167.28**
2.8m Flexi Versatile Sealstrip	30.5012	27.00	**33.21**
Flexible waste pipe	30.400B	24.00	**29.52**

Panel height 95mm, adjustable legs 85-105mm. *Does not include flexible waste pipe (30.400B)

Chrome Shower Waste

Description	Code	€ Ex VAT	€ Inc VAT
Mega flow shower waste	12.040	37.00	**45.51**
Volente Luxury Metal Chrome Shower Waste Chrome	41.5000	44.00	**54.12**

Waste efficiency decreases when shower head is positioned directly above waste.

FEATURES

- 40% Lighter than a high wall stone resin tray
- Reinforced high strength resin marble material
- Made with WRAS approved resins

Volente Trays

VOLENTE ANTI SLIP RECTANGULAR SHOWER TRAYS



Standard Volente Tray shown above. Prices right >>
Same shape as Volente Anti Slip Trays below.

TRAYS

Volente Anti Slip ABS Stone Resin Trays

Size	Plan	Waste Position	Waste Size	A	B	C	D	E	F	Code	€ Ex VAT	€ Inc VAT
1200 x 800	B	W1	90	1200	800	40	65	190	600	158.718	499.00	**613.77**
1200 x 900	B	W1	90	1200	900	40	65	190	600	158.719	506.00	**622.38**
1300 x 800	B	W1	90	1300	800	40	65	190	600	158.720	524.00	**644.52**
1400 x 800	B	W1	90	1400	800	40	65	190	700	158.721	580.00	**713.40**
1400 x 900	B	W1	90	1400	900	40	65	190	700	158.722	632.00	**777.36**
1500 x 800	B	W1	90	1500	800	40	65	190	750	158.723	684.00	**841.32**
1600 x 800	B	W1	90	1600	800	40	65	190	800	158.724	668.00	**821.64**
1700 x 700	B	W1	90	1700	700	40	65	350	190	158.726	668.00	**821.64**
1700 x 800	B	W1	90	1700	800	40	65	190	850	158.725	696.00	**856.08**
1800 x 800	B	W1	90	1800	800	40	65	190	900	158.727	728.00	**895.44**
1800 x 900	B	W1	90	1800	900	40	65	190	900	158.728	749.00	**921.27**

Waste sold separately.

FEATURES

- 40% Lighter than a high wall stone resin tray
- Reinforced high strength resin marble material
- Made with WRAS approved resins
- Anti slip base

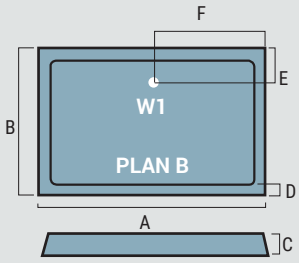

Anti Slip Base



*Subject to cleaning conditions

EXTRAS

Legs, Panel Packs & Seal Strip

Description	Code	€ Ex VAT	€ Inc VAT
Volente legs & panels for up to 1200x1200 rect trays*	158.080	112.00	**137.76**
Volente legs & panels for up to 2000x900 rect trays	158.082	163.00	**200.49**
1200 Tray Panel only for three sided installation	158.682	47.00	**57.81**
2.8m Flexi Versatile Sealstrip	30.5012	27.00	**33.21**
Flexible waste pipe White	30.400B	24.00	**29.52**

Panel height 95mm, adjustable legs 85-105mm.
*Does not include flexible waste pipe (30.400B)

EXTRAS

Chrome Shower Waste

Description	Code	€ Ex VAT	€ Inc VAT
Mega flow shower waste	12.040	37.00	**45.51**
Volente Luxury Metal Chrome Shower Waste Chrome	41.5000	44.00	**54.12**

Waste efficiency decreases when shower head is positioned directly above waste.

Volente Trays

TRAYS

Rectangular Volente Tray

Size	Plan	Waste Position	Waste Size	A	B	C	D	E	F	Code	€ Ex VAT	€ Inc VAT
800 x 700	B	W1	90	800	700	40	65	190	400	158.680	250.00	**307.50**
800 x 760	B	W1	90	800	760	40	65	190	400	158.681	250.00	**307.50**
800 x 900	B	W1	90	900	800	40	65	190	450	158.055	306.00	**376.38**
800 x 1000	B	W1	90	1000	800	40	65	190	500	158.056	320.00	**393.60**
900 x 700	B	W1	90	900	700	40	65	190	450	158.624	287.00	**353.01**
900 x 760	B	W1	90	900	760	40	65	190	450	158.054	292.00	**359.16**
900 x 800	B	W1	90	900	800	40	65	190	450	158.055	306.00	**376.38**
900 x 1000	B	W1	90	1000	900	40	65	190	500	158.628	336.00	**413.28**
1000 x 700	B	W1	90	1000	700	40	65	190	500	158.625	308.00	**378.84**
1000 x 760	B	W1	90	1000	760	40	65	190	500	158.627	313.00	**384.99**
1000 x 800	B	W1	90	1000	800	40	65	190	500	158.056	320.00	**393.60**
1000 x 900	B	W1	90	1000	900	40	65	190	500	158.628	336.00	**413.28**
1100 x 700	B	W1	90	1100	700	40	65	190	550	158.629	336.00	**413.28**
1100 x 760	B	W1	90	1100	760	40	65	190	550	158.630	336.00	**413.28**
1100 x 800	B	W1	90	1100	800	40	65	190	550	158.057	336.00	**413.28**
1100 x 900	B	W1	90	1100	900	40	65	190	550	158.631	357.00	**439.11**
1200 x 700	B	W1	90	1200	700	40	65	190	600	158.632	336.00	**413.28**
1200 x 760	B	W1	90	1200	760	40	65	190	600	158.058	336.00	**413.28**
1200 x 800	B	W1	90	1200	800	40	65	190	600	158.059	357.00	**439.11**
1200 x 900	B	W1	90	1200	900	40	65	190	600	158.060	367.00	**451.41**
1300 x 700	B	W1	90	1300	700	40	65	190	650	158.683	366.00	**450.18**
1300 x 760	B	W1	90	1300	760	40	65	190	650	158.684	366.00	**450.18**
1300 x 800	B	W1	90	1300	800	40	65	190	650	158.685	383.00	**471.09**
1300 x 900	B	W1	90	1300	900	40	65	190	650	158.686	383.00	**471.09**
1400 x 700	B	W1	90	1400	700	40	65	190	700	158.633	427.00	**525.21**
1400 x 760	B	W1	90	1400	760	40	65	190	700	158.634	432.00	**531.36**
1400 x 800	B	W1	90	1400	800	40	65	190	700	158.635	432.00	**531.36**
1400 x 900	B	W1	90	1400	900	40	65	190	700	158.061	478.00	**587.94**
1500 x 700	B	W1	90	1500	700	40	65	190	750	158.636	475.00	**584.25**
1500 x 760	B	W1	90	1500	760	40	65	190	750	158.637	488.00	**600.24**
1500 x 800	B	W1	90	1500	800	40	65	190	750	158.638	502.00	**617.46**
1500 x 900	B	W1	90	1500	900	40	65	190	750	158.639	514.00	**632.22**
1600 x 700	B	W1	90	1600	700	40	65	190	800	158.675	496.00	**610.08**
1600 x 760	B	W1	90	1600	760	40	65	190	800	158.676	502.00	**617.46**
1600 x 800	B	W1	90	1600	800	40	65	190	800	158.678	488.00	**600.24**
1600 x 900	B	W1	90	1600	900	40	65	190	800	158.679	506.00	**622.38**
1650 x 700	B	W1	90	1650	700	40	65	190	800	158.701	524.00	**644.52**
1650 x 800	B	W1	90	1650	800	40	65	190	800	158.702	548.00	**674.04**
1700 x 700*	A	W2	90	1700	700	40	65	350	190	158.073	488.00	**600.24**
1700 x 750	B	W1	90	1700	750	40	65	190	850	158.640	506.00	**622.38**
1700 x 800	B	W1	90	1700	800	40	65	190	850	158.641	514.00	**632.22**
1700 x 900	B	W1	90	1700	900	40	65	190	850	158.642	523.00	**643.29**
1800 x 700	B	W1	90	1800	700	40	65	190	900	158.687	517.00	**635.91**
1800 x 760	B	W1	90	1800	760	40	65	190	900	158.688	534.00	**656.82**
1800 x 800	B	W1	90	1800	800	40	65	190	900	158.689	542.00	**666.66**
1800 x 900	B	W1	90	1800	900	40	65	190	900	158.690	559.00	**687.57**
2000 x 700	B	W1	90	2000	700	40	65	190	1000	158.703	563.00	**692.49**
2000 x 800	B	W1	90	2000	800	40	65	190	1000	158.704	566.00	**696.18**
2000 x 900	B	W1	90	2000	900	40	65	190	1000	158.705	569.00	**699.87**

*End of tray opposite waste has built-in drying area. Waste sold separately.

VOLENTE RECTANGULAR SHOWER TRAYS

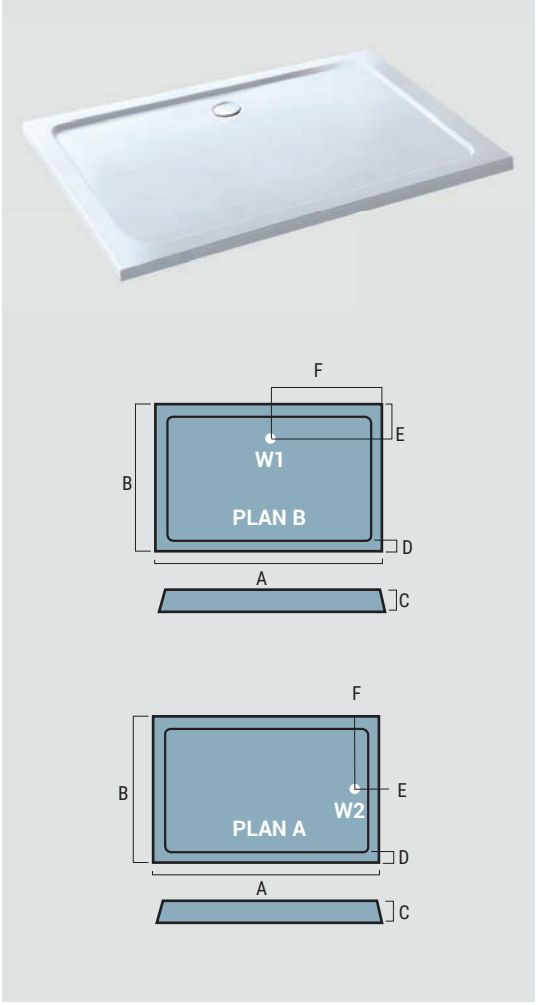

A versatile range of trays that combines the durability and warmth of an acrylic top surface with the rigidity and solid feel of stone resin. Can be installed using the appropriate leg and panel pack for even greater ease of fitting.

FEATURES

- 40% Lighter than a high wall stone resin tray
- Reinforced high strength resin marble material
- Made with WRAS approved resins

EXTRAS

Legs, Panel Packs & Seal Strip

Description	Code	€ Ex VAT	€ Inc VAT
Volente legs & panels for up to 1200x1200 rect trays*	158.080	112.00	**137.76**
Volente legs & panels for up to 2000x900 rect trays	158.082	163.00	**200.49**
1200 Tray Panel only for three sided installation	158.682	47.00	**57.81**
2.8m Flexi Versatile Sealstrip	30.5012	27.00	**33.21**
Flexible waste pipe White	30.400B	24.00	**29.52**

Panel height 95mm, adjustable legs 85-105mm.
*Does not include flexible waste pipe (30.400B)

EXTRAS

Chrome Shower Waste

Description	Code	€ Ex VAT	€ Inc VAT
Mega flow shower waste	12.040	37.00	**45.51**
Volente Luxury Metal Chrome Shower Waste Chrome	41.5000	44.00	**54.12**

Waste efficiency decreases when shower head is positioned directly above waste.

Volente Trays

VOLENTE OFFSET QUAD SHOWER TRAYS



Volente Trays

VOLENTE OFFSET QUAD SHOWER TRAYS

TRAYS

Offset Quadrant Volente Tray

Size	Plan	Hand	Waste Position	Waste Size	A	B	C	D	E	F	G	H	J	Code	€ Ex VAT	€ Inc VAT
900 x 700	D	L/H	W1	90	900	700	40	65	410	600	150	350	550	158.074	313.00	**384.99**
900 x 700	D	R/H	W1	90	900	700	40	65	410	600	150	350	550	158.075	313.00	**384.99**
900 x 760	D	L/H	W1	90	900	760	40	65	470	600	210	350	550	158.643	322.00	**396.06**
900 x 760	D	R/H	W1	90	900	760	40	65	470	600	210	350	550	158.644	322.00	**396.06**
900 x 800	D	L/H	W1	90	900	800	40	65	510	600	250	350	550	158.065	320.00	**393.60**
900 x 800	D	R/H	W1	90	900	800	40	65	510	600	250	350	550	158.066	320.00	**393.60**
1000 x 700	D	L/H	W1	90	1000	700	40	65	410	700	150	450	550	158.706	275.00	**338.25**
1000 x 700	D	R/H	W1	90	1000	700	40	65	410	700	150	450	550	158.707	275.00	**338.25**
1000 x 760	D	L/H	W1	90	1000	760	40	65	470	700	210	450	550	158.645	343.00	**421.89**
1000 x 760	D	R/H	W1	90	1000	760	40	65	470	700	210	450	550	158.646	343.00	**421.89**
1000 x 800	D	L/H	W1	90	1000	800	40	65	510	700	250	450	550	158.067	335.00	**412.05**
1000 x 800	D	R/H	W1	90	1000	800	40	65	510	700	250	450	550	158.068	335.00	**412.05**
1000 x 900	D	L/H	W1	90	1000	900	40	65	610	700	350	450	550	158.647	343.00	**421.89**
1000 x 900	D	R/H	W1	90	1000	900	40	65	610	700	350	450	550	158.648	343.00	**421.89**
1100 x 700	D	L/H	W1	90	1100	700	40	65	410	800	150	550	550	158.708	285.00	**350.55**
1100 x 700	D	R/H	W1	90	1100	700	40	65	410	800	150	550	550	158.709	285.00	**350.55**
1100 x 760	D	L/H	W1	90	1100	760	40	65	470	800	210	550	550	158.710	285.00	**350.55**
1100 x 760	D	R/H	W1	90	1100	760	40	65	470	800	210	550	550	158.711	285.00	**350.55**
1100 x 800	D	L/H	W1	90	1100	800	40	65	510	800	250	550	550	158.712	285.00	**350.55**
1100 x 800	D	R/H	W1	90	1100	800	40	65	510	800	250	550	550	158.713	285.00	**350.55**
1100 x 900	D	L/H	W1	90	1100	900	40	65	610	800	350	550	550	158.714	313.00	**384.99**
1100 x 900	D	R/H	W1	90	1100	900	40	65	610	800	350	550	550	158.715	313.00	**384.99**
1200 x 700	D	L/H	W1	90	1200	700	40	65	410	900	150	650	550	158.716	306.00	**376.38**
1200 x 700	D	R/H	W1	90	1200	700	40	65	410	900	150	650	550	158.717	306.00	**376.38**
1200 x 760	D	L/H	W1	90	1200	760	40	65	470	900	210	650	550	158.649	343.00	**421.89**
1200 x 760	D	R/H	W1	90	1200	760	40	65	470	900	210	650	550	158.650	343.00	**421.89**
1200 x 800	D	L/H	W1	90	1200	800	40	65	510	900	250	650	550	158.069	370.00	**455.10**
1200 x 800	D	R/H	W1	90	1200	800	40	65	510	900	250	650	550	158.070	370.00	**455.10**
1200 x 900	D	L/H	W1	90	1200	900	40	65	610	900	350	650	550	158.071	383.00	**471.09**
1200 x 900	D	R/H	W1	90	1200	900	40	65	610	900	350	650	550	158.072	383.00	**471.09**
1300 x 760	D	L/H	W1	90	1300	760	40	65	470	1000	210	750	550	158.693	378.00	**464.94**
1300 x 760	D	R/H	W1	90	1300	760	40	65	470	1000	210	750	550	158.694	378.00	**464.94**
1300 x 800	D	L/H	W1	90	1300	800	40	65	510	1000	280	750	550	158.695	385.00	**473.55**
1300 x 800	D	R/H	W1	90	1300	800	40	65	510	1000	280	750	550	158.696	385.00	**473.55**
1400 x 760	D	L/H	W1	90	1400	760	40	65	470	1100	210	850	550	158.697	453.00	**557.19**
1400 x 760	D	R/H	W1	90	1400	760	40	65	470	1100	210	850	550	158.698	453.00	**557.19**
1400 x 800	D	L/H	W1	90	1400	800	40	65	510	1100	280	850	550	158.699	453.00	**557.19**
1400 x 800	D	R/H	W1	90	1400	800	40	65	510	1100	280	850	550	158.700	453.00	**557.19**

Waste sold separately.

EXTRAS

Legs, Panel Packs & Seal Strip

Description	Code	€ Ex VAT	€ Inc VAT
Volente legs & panel quad trays up to 1200 x 900	158.081	112.00	**137.76**
Volente legs & panel for quad trays over 1200	158.085	136.00	**167.28**
2.8m Flexi Versatile Sealstrip	30.5012	27.00	**33.21**
Flexible waste pipe White	30.400B	24.00	**29.52**

Panel height 95mm, adjustable legs 85-105mm. *Does not include flexible waste pipe (30.400B)

Chrome Shower Waste

Description	Code	€ Ex VAT	€ Inc VAT
Mega flow shower waste	12.040	37.00	**45.51**
Volente Luxury Metal Chrome Shower Waste Chrome	41.5000	44.00	**54.12**

Waste efficiency decreases when shower head is positioned directly above waste.

Shown below with legs and panel pack, seal strip, flexible waste pipe and waste, which are all sold separately.

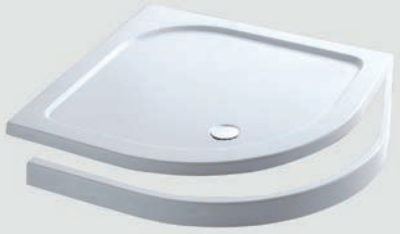

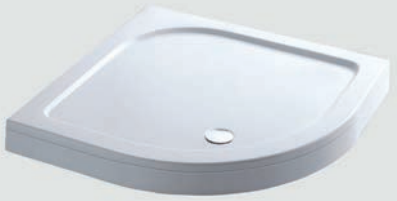

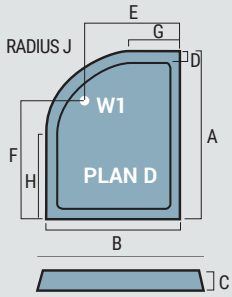



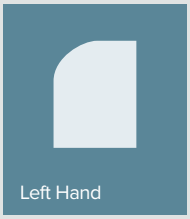

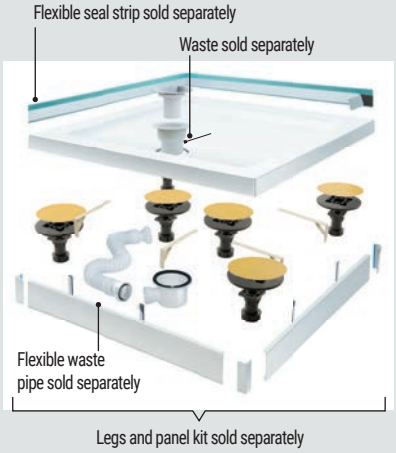

Vanguard Trays

VANGUARD 25 SHOWER TRAYS



Quadrant Trays

A versatile range of trays that combines the durability and warmth of an acrylic top surface with the rigidity and solid feel of stone resin.

FEATURES
- Soft grip textured base
- Made of cast resin - 75% marble stone
- Repairable if chipped
- Easy clean surface

TRAYS

Quadrant Vanguard Tray

Size	Plan	Waste Size	A	B	C	D	E	F	G	H	J	K	Code	€ Ex VAT	€ Inc VAT
800 x 800	A	STD	802	802	30	40	160	150	252	252	550	-	51.055	306.00	**376.38**
900 x 900	B	STD	902	902	30	40	-	172	352	352	550	60	51.057	378.00	**464.94**
1000 x 1000	B	STD	1002	1002	30	40	-	180	452	452	550	60	51.060	413.00	**507.99**

Waste sold separately.

Quadrant Trays



Safety
The Vanguard's outer white nanocoat surface is created with a soft grip texture; purposely designed for safety whilst showering.

Quality
With just one touch you will feel the nature inherent within the Vanguard Tray ranges Mineral Composite. This material combination attains a whole new level of durability withinthe bathroom enviroment:

- 75% Marble Stone
- Compressed Resin Bond
- Nanocoat External Layer

By having the external white nanocoat surface, the Vanguard range has an insusceptibility to bacterial growth and absorption of water. This ensures a long lasting quality and ease of care

Mineral Composite Profile

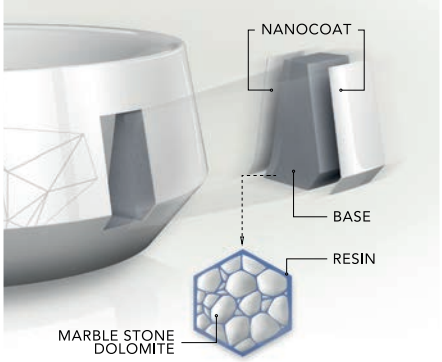

Vanguard Trays

Design

The Mineral Composite enables an extensive range of shapes to be created and frees up the imagination of designers. With a 0-to-3mm tolerance and a minimum radius of 2mm, the Vanguard is precise by its very nature. Effortlessly elegant.

30MM HEIGHT SLIMLINE DESIGN



SOFT GRIP TEXTURED BASE

*Subject to cleaning condition
*Conforms to BS7976

TRAYS

Square Vanguard 25 Trays

Size	Plan	Waste Position	Waste Size	A	B	C	D	E	F	Code	€ Ex VAT	€ Inc VAT
700 x 700	C	-	STD	702	702	30	40	150	150	51.052	251.00	**308.73**
800 x 800	C	-	STD	802	802	30	40	150	150	51.054	306.00	**376.38**
900 x 900	C	-	STD	900	900	30	40	180	180	51.056	378.00	**464.94**
1000 x 1000	C	-	STD	1002	994	30	40	150	150	51.061	413.00	**507.99**

Rectangular Vanguard 25 Trays

Size	Plan	Waste Position	Waste Size	A	B	C	D	E	F	Code	€ Ex VAT	€ Inc VAT
800 x 760	D	W1	STD	802	762	30	40	151	151	51.071	313.00	**384.99**
900 x 700	E	W2	STD	902	702	30	40	451	351	51.053	297.00	**365.31**
900 x 800	D	W1	STD	902	802	30	40	151	151	51.072	360.00	**442.80**
1000 x 700	D	W1	STD	1002	702	30	40	151	151	51.058	336.00	**413.28**
1000 x 800	D	W1	STD	1002	802	30	40	151	151	51.059	366.00	**450.18**
1000 x 900	D	W1	STD	1002	902	30	40	151	151	51.073	413.00	**507.99**
1100 x 800	D	W1	STD	1102	802	30	40	151	151	51.074	409.00	**503.07**
1200 x 700	D	W1	STD	1202	702	30	40	151	151	51.062	390.00	**479.70**
1200 x 760	D	W1	STD	1202	762	30	40	151	151	51.075	413.00	**507.99**
1200 x 800	D	W1	STD	1202	802	30	40	151	151	51.063	412.00	**506.76**
1200 x 900	E	W2	STD	1202	902	30	40	601	451	51.064	437.00	**537.51**
1300 x 800	E	W2	STD	1302	802	30	40	651	401	51.076	467.00	**574.41**
1300 x 900	E	W2	STD	1302	902	30	40	651	451	51.077	506.00	**622.38**
1400 x 700	E	W2	STD	1402	702	30	40	701	351	51.078	450.00	**553.50**
1400 x 800	E	W2	STD	1402	802	30	40	701	401	51.065	458.00	**563.34**
1400 x 900	E	W2	STD	1402	902	30	40	701	451	51.066	542.00	**666.66**
1500 x 800	E	W2	STD	1502	802	30	40	751	401	51.079	523.00	**643.29**
1500 x 900	E	W2	STD	1502	902	30	40	751	451	51.080	581.00	**714.63**
1600 x 700	E	W2	STD	1602	702	30	40	801	351	51.081	472.00	**580.56**
1600 x 800	E	W2	STD	1602	802	30	40	801	401	51.067	549.00	**675.27**
1600 x 900	E	W2	STD	1602	902	30	40	801	451	51.068	639.00	**785.97**
1700 x 700	E	W2	STD	1702	702	30	40	851	351	51.082	593.00	**729.39**
1700 x 750	E	W2	STD	1702	752	30	40	851	376	51.083	615.00	**756.45**
1700 x 800	E	W2	STD	1702	802	30	40	851	401	51.069	604.00	**742.92**
1700 x 900	E	W2	STD	1702	902	30	40	851	451	51.084	730.00	**897.90**
1800 x 800	E	W2	STD	1802	802	30	40	901	401	51.070	705.00	**867.15**
1800 x 900	E	W2	STD	1802	902	30	40	901	451	51.085	810.00	**996.30**

Waste sold separatley.

EXTRAS

Chrome Shower Waste

Description	Code	€ Ex VAT	€ Inc VAT
Mega flow shower waste	12.040	37.00	**45.51**
Volente Luxury Metal Chrome Shower Waste Chrome	41.5000	44.00	**54.12**

Waste efficiency decreases when shower head is positioned directly above waste. Please note that the Rectangular Vanguard 25 Trays are not compatable with leg & panel kits.

VANGUARD 25 SHOWER TRAYS

Square Trays



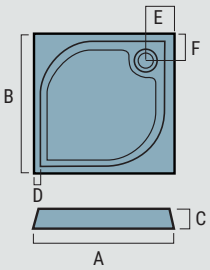

Rectangular Trays



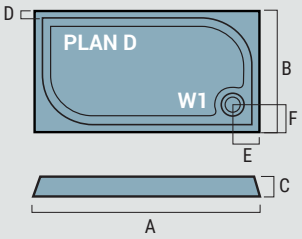



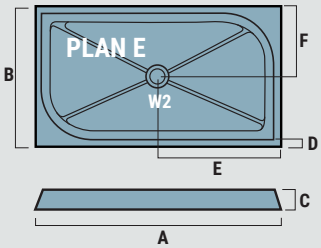

Vantage Trays

VANTAGE SQUARE TRAYS



Square Tray - Plan A Shown

FEATURES

- All trays have a flat underside making installation and levelling even easier.
- Slimline, at 40-45 mm height they're among the sleekest on today's market.
- All trays are acrylic capped and constructed from a polyurethane resin mix.
- Light stone resin trays allows for easier handling and fitting, while still maintaining the strength of conventional trays.

Square Trays



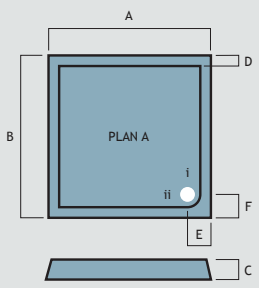

TRAYS

Square Vantage Trays

Size	Plan	Waste Size External	Waste Size Internal	A	B	C	D	E	F	G	Code	€ Ex VAT	€ Inc VAT
700 x 700	A	116	90	700	700	40	60	140	140		48.1001	175.00	**215.25**
760 x 760	A	116	90	760	760	40	60	140	140		48.1002	185.00	**227.55**
800 x 800	A	112	90	800	800	40	60	140	140		48.1003	194.00	**238.62**
900 x 900	A	112	90	900	900	40	60	140	140		48.1007	236.00	**290.28**
1000 x 1000	A	112	90	1000	1000	40	60	140	140		48.1012	292.00	**359.16**

Extras

Legs, Panel Packs & Seal Strip

Description	Code	€ Ex VAT	€ Inc VAT
Vantage legs & panel for 700-900 square & rectangle trays	48.1061	76.00	**93.48**
Vantage legs & panel for 1000 square & rectangle trays	48.1062	89.00	**109.47**
Flexible waste pipe White	30.400B	24.00	**29.52**

Shower Wastes

Description	Code	€ Ex VAT	€ Inc VAT
Vantage Shower Waste - Chrome	48.1067	34.00	**41.82**
Mega Flow Shower Waste 90mm - Matt Black	48.1068	37.00	**45.51**

Vantage Trays

VANTAGE WALK-IN TRAYS



FEATURES

- All trays have a flat underside making installation and levelling even easier.
- Slimline, at 40-45 mm height they're among the sleekest on today's market.
- All trays are acrylic capped and constructed from a polyurethane resin mix.
- Light stone resin trays allow for easier handling and fitting, while still maintaining the strength of conventional trays.

TRAYS

Walk-In Vantage Trays

Size	Plan	Waste Size External	Waste Size Internal	A	B	C	D	E	F	G	H	J	Code	€ Ex VAT	€ Inc VAT
1400 x 800	D	116	90	1400	800	40	65	190	400	400	773	627	48.1056	623.00	**766.29**
1400 x 900	D	116	90	1400	900	40	65	190	450	450	773	627	48.1057	535.00	**658.05**
1600 x 800	D	116	90	1600	800	40	65	230	400	400	973	627	48.1058	549.00	**675.27**
1700 x 700	D	116	90	1700	700	40	65	240	350	350	1073	627	48.1059	663.00	**815.49**
1700 x 800	D	116	90	1700	800	40	65	240	400	400	1073	627	48.1060	581.00	**714.63**

Waste sold separately.

Extras

Legs, Panel Packs & Seal Strip

Description	Code	€ Ex VAT	€ Inc VAT
Vantage legs & panel for 700-900 square & rectangle trays	48.1061	76.00	**93.48**
Vantage legs & panel for 1100-1200 rectangle trays	48.1063	90.00	**110.70**
Vantage legs & panel for 1300-1800 rectangle trays	48.1064	90.00	**110.70**
Flexible waste pipe White	30.400B	24.00	**29.52**

Shower Wastes

Description	Code	€ Ex VAT	€ Inc VAT
Vantage Shower Waste - Chrome	48.1067	34.00	**41.82**
Mega Flow Shower Waste 90mm - Matt Black	48.1068	37.00	**45.51**

Vantage Trays

VANTAGE RECTANGLE TRAYS

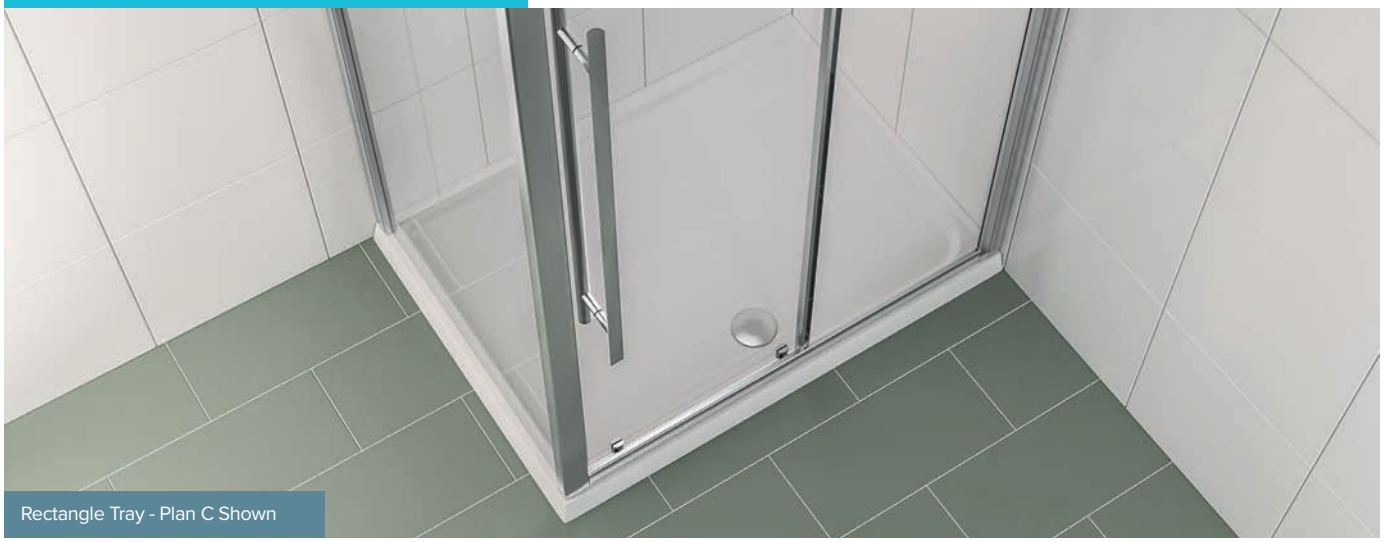

Rectangle Tray - Plan C Shown

FEATURES

- All trays have a flat underside making installation and levelling even easier.
- Slimline, at 40-45 mm height they're among the sleekest on today's market.
- All trays are acrylic capped and constructed from a polyurethane resin mix.
- Light stone resin trays allows for easier handling and fitting, while still maintaining the strength of conventional trays.

TRAYS

Rectangular Vantage Trays

Size	Plan	Waste Position	Waste Size	A	B	C	D	E	F	G	Code	€ Ex VAT	€ Inc VAT
900 x 700	B	112	90	900	700	40	60	140	140		48.1004	227.00	**279.21**
900 x 760	B	112	90	900	760	40	60	140	140		48.1005	231.00	**284.13**
900 x 800	B	112	90	900	800	40	60	140	140		48.1006	236.00	**290.28**
1000 x 700	B	112	90	1000	760	40	60	140	140		48.1017	240.00	**295.20**
1000 x 760	B	112	90	1000	760	40	60	140	140		48.1009	241.00	**296.43**
1000 x 800	B	112	90	1000	800	40	60	140	140		48.1010	245.00	**301.35**
1000 x 900	B	112	90	1000	900	40	60	140	140		48.1011	265.00	**325.95**
1100 x 700	B	112	90	1100	700	40	60	140	140		48.1013	266.00	**327.18**
1100 x 760	B	112	90	1100	760	40	60	140	140		48.1014	278.00	**341.94**
1100 x 800	B	112	90	1100	800	40	60	140	140		48.1015	286.00	**351.78**
1100 x 900	B	112	90	1100	900	40	60	140	140		48.1016	304.00	**373.92**
1200 x 700	B	112	90	1200	700	40	60	140	140		48.1008	278.00	**341.94**
1200 x 760	B	112	90	1200	760	40	60	140	140		48.1018	278.00	**341.94**
1200 x 800	B	112	90	1200	800	40	60	140	140		48.1019	283.00	**348.09**
1200 x 900	B	112	90	1200	900	40	60	140	140		48.1020	306.00	**376.38**
1200 x 1000	C	116	90	1200	1000	40	60	140	600	600	48.1021	332.00	**408.36**
1300 x 800	C	116	90	1300	800	40	60	140	650	650	48.1022	352.00	**432.96**
1400 x 700	C	112	90	1400	700	40	60	140	700	700	48.1023	345.00	**424.35**
1400 x 760	C	116	90	1400	760	40	60	140	700	700	48.1024	352.00	**432.96**
1400 x 800	C	112	90	1400	800	40	60	140	700	700	48.1025	357.00	**439.11**
1400 x 900	C	112	90	1400	900	40	60	140	700	700	48.1026	385.00	**473.55**
1500 x 700	C	112	90	1500	700	40	60	140	750	750	48.1027	370.00	**455.10**
1500 x 760	C	116	90	1500	760	40	60	140	750	750	48.1028	381.00	**468.63**
1500 x 800	C	116	90	1500	800	40	60	140	750	750	48.1029	413.00	**507.99**
1500 x 900	C	112	90	1500	900	40	60	140	750	750	48.1030	420.00	**516.60**
1600 x 700	C	112	90	1600	700	40	60	140	800	800	48.1031	408.00	**501.84**
1600 x 760	C	116	90	1600	760	40	60	140	800	800	48.1032	412.00	**506.76**
1600 x 800	C	112	90	1600	800	40	60	140	800	800	48.1033	429.00	**527.67**
1600 x 900	C	116	90	1600	900	40	60	140	800	800	48.1034	439.00	**539.97**
1700 x 700	C	112	90	1700	700	40	60	140	850	850	48.1035	425.00	**522.75**
1700 x 760	C	116	90	1700	760	40	60	140	850	850	48.1036	434.00	**533.82**
1700 x 800	C	116	90	1700	800	40	60	140	850	850	48.1037	443.00	**544.89**
1700 x 900	C	116	90	1700	900	40	60	140	850	850	48.1038	453.00	**557.19**
1800 x 800	C	116	90	1800	800	40	60	140	900	900	48.1039	483.00	**594.09**
1800 x 900	C	116	90	1800	900	40	60	160	900	900	48.1040	496.00	**610.08**

Price does not include shower waste.

Rectangular Trays



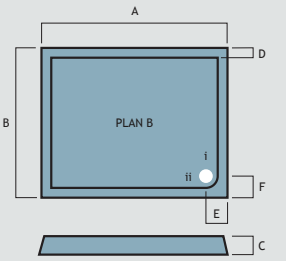



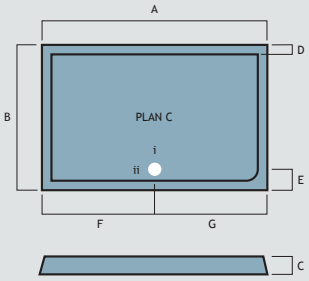

Vantage Trays

VANTAGE RECTANGLE TRAYS



Rectangle Tray - Plan C Shown | Enclosure for illustration purposes only

Extras

Legs, Panel Packs & Seal Strip

Description	Code	€ Ex VAT	€ Inc VAT
Vantage legs & panel for 700-900 square & rectangle trays	48.1061	76.00	**93.48**
Vantage legs & panel for 1000 square & rectangle trays	48.1062	89.00	**109.47**
Vantage legs & panel for 1100-1200 rectangle trays	48.1063	90.00	**110.70**
Vantage legs & panel for 1300-1800 rectangle trays	48.1064	90.00	**110.70**
Flexible waste pipe White	30.400B	24.00	**29.52**

Shower Wastes

Description	Code	€ Ex VAT	€ Inc VAT
Vantage Shower Waste - Chrome	48.1067	34.00	**41.82**
Mega Flow Shower Waste 90mm - Matt Black	48.1068	37.00	**45.51**

Vantage Trays

VANTAGE QUADRANT TRAYS



Quadrant Tray - Plan E Shown

Enclosure for illustration purposes only

FEATURES

- All trays have a flat underside making installation and levelling even easier.
- Slimline, at 40-45 mm height they're among the sleekest on today's market.
- All trays are acrylic capped and constructed from a polyurethane resin mix. Perfect for a modern and contemporary wet room design.
- Up to 50% lighter than conventional stone resin trays allowing for easier handling and fitting, while still maintaining the strength of conventional trays.

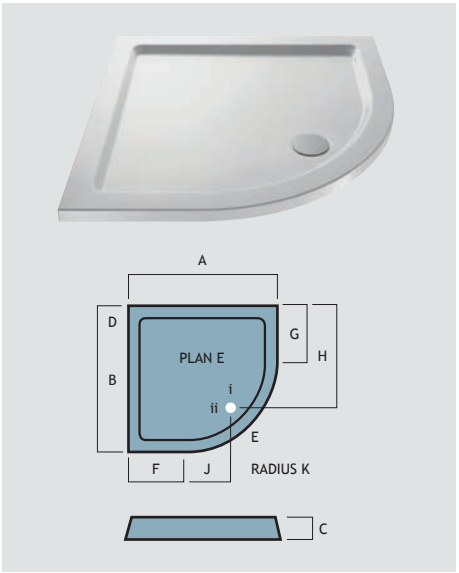





EXTRAS

Shower Wastes

Description	Code	€ Ex VAT	€ Inc VAT
Vantage Shower Waste - Chrome	48.1067	34.00	**41.82**
Mega Flow Shower Waste 90mm - Matt Black	48.1068	37.00	**45.51**

EXTRAS

Legs, Panel Packs & Seal Strip

Description	Code	€ Ex VAT	€ Inc VAT
Vantage legs & panel for 700-900 quad trays	48.1065	96.00	**118.08**
Vantage legs & panel for 1000-1200 quad trays	48.1066	105.00	**129.15**

TRAYS

Quadrant Vantage Trays

Size	Plan	Waste Size External	Waste Size Internal	A	B	C	D	E	F	G	H	J	K	Code	€ Ex VAT	€ Inc VAT
800 x 800	E	112	90	800	800	40	60	135	250	250	543	543	550	48.1045	191.00	**234.93**
900 x 900	E	112	90	900	900	40	60	135	350	350	643	643	550	48.1046	206.00	**253.38**
1000 x 1000	E	112	90	1000	1000	40	60	135	450	450	743	743	550	48.1047	287.00	**353.01**

Waste sold separately.

Vantage Trays

VANTAGE OFFSET QUADRANT TRAYS



Offset Quadrant Tray - Plan F Shown | Enclosure for illustration purposes only

FEATURES

- All trays have a flat underside making installation and levelling even easier.
- Slimline, at 40-45 mm height they're among the sleekest on today's market.
- All trays are acrylic capped and constructed from a polyurethane resin mix.

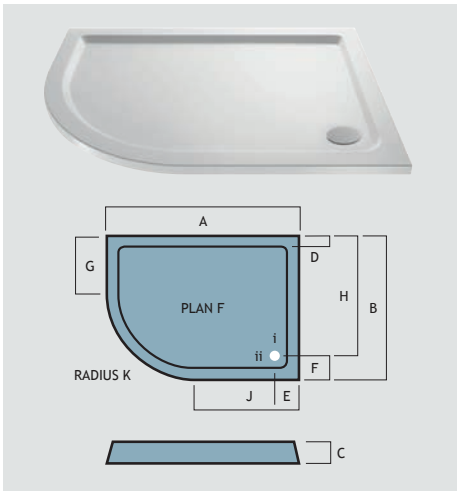





EXTRAS

Shower Wastes

Description	Code	€ Ex VAT	€ Inc VAT
Vantage Shower Waste - Chrome	48.1067	34.00	**41.82**
Mega Flow Shower Waste 90mm - Matt Black	48.1068	37.00	**45.51**

EXTRAS

Legs, Panel Packs & Seal Strip

Description	Code	€ Ex VAT	€ Inc VAT
Vantage legs & panel for 700-900 quad trays	48.1065	96.00	**118.08**
Vantage legs & panel for 1000-1200 quad trays	48.1066	105.00	**129.15**

TRAYS

Offset Quadrant Vantage Trays

Size	Plan	Hand	Waste Position	Waste Size	A	B	C	D	E	F	G	H	J	K	Code	€ Ex VAT	€ Inc VAT
900 x 760	F	L/H	112	90	900	760	40	60	135	135	210	625	350	550	48.1041	209.00	**257.07**
900 x 760	F	R/H	112	90	900	760	40	60	135	135	210	625	350	550	48.1042	209.00	**257.07**
900 x 800	F	L/H	112	90	900	800	40	60	135	135	250	665	350	550	48.1043	237.00	**291.51**
900 x 800	F	R/H	112	90	900	800	40	60	135	135	250	665	350	550	48.1044	237.00	**291.51**
1000 x 800	F	L/H	112	90	1000	800	40	60	135	135	250	665	450	550	48.1048	250.00	**307.50**
1000 x 800	F	R/H	112	90	1000	800	40	60	135	135	250	665	450	550	48.1049	250.00	**307.50**
1000 x 900	F	L/H	112	90	1000	900	40	60	135	135	350	765	450	550	48.1050	282.00	**346.86**
1000 x 900	F	R/H	112	90	1000	900	40	60	135	135	350	765	450	550	48.1051	282.00	**346.86**
1200 x 800	F	L/H	112	90	1200	800	40	60	135	135	250	665	650	550	48.1052	280.00	**344.40**
1200 x 800	F	R/H	112	90	1200	800	40	60	135	135	250	665	650	550	48.1053	280.00	**344.40**
1200 x 900	F	L/H	112	90	1200	900	40	60	135	135	350	765	650	550	48.1054	304.00	**373.92**
1200 x 900	F	R/H	112	90	1200	900	40	60	135	135	350	765	650	550	48.1055	304.00	**373.92**

Waste sold separately.



Panelling

Hydropanel shower panelling with decorative laminate on the front and a balancer laminate on the reverse. PVC panels, ideal for walls and ceilings in bathrooms, showers and kitchen.

QUICK TO FIT
EASY TO CLEAN
MAINTENANCE FREE



Contents

Hydropanel	454 - 455
Mirror gloss hydropanel	456
Fitting Instructions	457 & 459
Standard PVC hydropanel	458
PVC Widepanels	460 - 461

Hydropanel

Ply & MDF Core Hydropanel

Pages 454-455

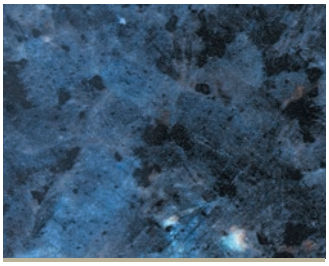
Pacific Blue Granite Gloss

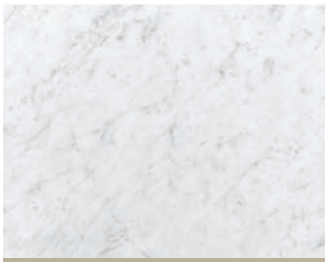
New Marble White Gloss


Slate

It is supplied in three formats:

1200 x 2420mm
Square edged

900 x 2420mm
Square edged

600 x 2430mm
with tongue and groove edges

White Gloss


Travertine Gloss


Granite Gloss


Black Speckle

This is our original shower panelling product consisting of a plywood core (T & G MDF core) with the decorative laminate on the front and a balancer laminate on the back. This is a very durable 10mm thick product with a very hard wearing face. It also has a degree of structural rigidity which can be an advantage in certain installations.


Mother Of Pearl Gloss


Marble Mint Green Gloss

New Marble Blue Gloss


Black Leaf


Pebbles


Concete Effect


Stratus Marble Gloss


Lima Matt


Graphite Marble Effect


Statuario Marble Velvet


White Speckle

This product can be bonded straight to the wall so long as the wall is straight and true. The surface of the wall will also need to be evaluated as to whether it will support the bonded boards suitably. Alternatively the boards can be bonded to a timber framework which can be used to straighten up walls that are not true. As with all Hydropanel products our own sealants and adhesives should be used.

PVC Panelling

PVC Widepanel

Pages 460-461

Ideal for walls and ceilings in bathrooms, showers and kitchens


Marble Cream


Black Marble


Travertine Gloss


Black Sparkle


Carrara Marble

Marble Blue

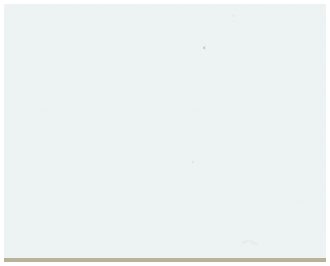
White


Pearl White


White Sparkle


Mother Of Pearl



Concrete Dark Matt Grey



Tuscany Grey Marble


Concrete Beige Matt

Mirror Gloss Hydropanel

Pages 456


Mirror Gloss Black


Mirror Gloss Anthracite

An Eastbrook favourite is the fantastic hydropanel with a mirror gloss finish. Available in 1200mm lengths in four striking finishes, it is hard wearing and colour fast. This product combines all the proven qualities of the standard hydropanel with this exciting new finish.


Mirror Gloss Brushed Aluminium

Mother Of Pearl Gloss

PVC Hydropanel

This is also a cellular PVC product, 5mm thick and supplied in packs of four planks which are 250mm wide. Available in lengths of 2400mm and 3000mm long planks which make it ideal for use on ceilings.

This is a lightweight product which is very fast and easy to install.

This product can be bonded straight to the wall so long as the wall is straight and true. The surface of the wall will also need to be evaluated as to whether it will support the bonded boards suitably. Alternatively the boards can be bonded to a timber frame work which can be used to straighten up walls that are not true. As with all Hydropanel products our own sealants and adhesives should be used.

Standard PVC ceiling and wall panelling

Pages 458

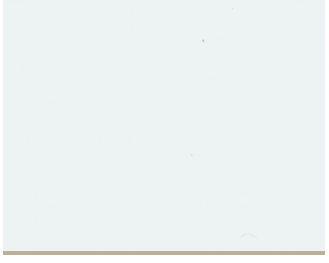
White

Hydropanel

HYDROPANEL SHOWER PANELLING

Colour samples subject to the limitations of the printing process

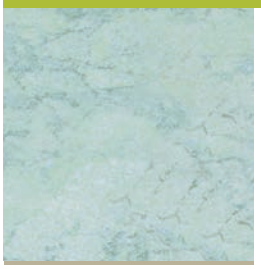
Marble Mint Green Gloss

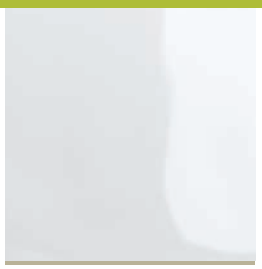
White Gloss

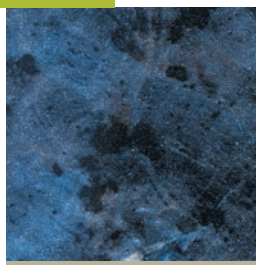
Pacific Blue Granite

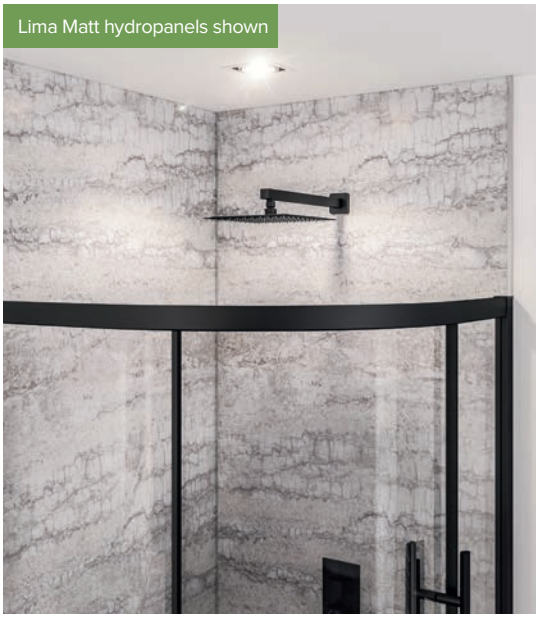
Lima Matt hydropanels shown


White Speckle


Black Speckle


Brushed Black


Travertine Gloss


Slate Matt


New Marble White Gloss


Mother of Pearl Gloss


Pebbles


Granite Gloss



Graphite Marble Effect





Lima Matt



Statuario Marble Velvet



Concete Effect



Stratus Marble Gloss

Straight edge stock panels. All 900mm panels are 2420mm high, all 1200mm panels are 2420mm high, 10mm thick.

Straight Edge Stock Panels

Colour	900mm	€ Ex VAT	€ Inc VAT	1200mm	€ Ex VAT	€ Inc VAT
Marble mint green gloss	3.101	328.00	**403.44**	3.201	369.00	**453.87**
New marble white gloss	3.121	317.00	**389.91**	3.221	362.00	**445.26**
Pacific blue granite gloss	3.108	332.00	**408.36**	3.208	380.00	**467.40**
White gloss	3.112	317.00	**389.91**	3.212	362.00	**445.26**
New Granite gloss	3.129	328.00	**403.44**	3.229	385.00	**473.55**
Mother of pearl gloss	3.116	338.00	**415.74**	3.216	385.00	**473.55**
Travertine gloss	3.126	338.00	**415.74**	3.226	385.00	**473.55**
Slate matt	3.119	338.00	**415.74**	3.219	385.00	**473.55**
Pebbles	-	-	-	3.224	388.00	**477.24**
Brushed black	-	-	-	3.225	409.00	**503.07**
White speckle	-	-	-	3.227	420.00	**516.60**
Black speckle	-	-	-	3.228	420.00	**516.60**
Statuario Marble Velvet	-	-	-	3.151	385.00	**473.55**
Lima Matt	-	-	-	3.152	385.00	**473.55**
Concrete Effect	-	-	-	3.153	385.00	**473.55**
Stratus Marble Gloss	-	-	-	3.154	385.00	**473.55**
Graphite Marble Effect	-	-	-	3.155	385.00	**473.55**

Hydropanel

HYDROPANEL SHOWER PANELLING

Hydropanel conforms to class 3 standard fire grade. Class 1 can be obtained with a lead time of approximately one month and a 20% surcharge.

Pictures not to scale.

As with all decorative products, differences in shading can occur between batches.

Please ensure you order enough for the job in hand and also ensure that shades and colours are checked and approved on site before installation commences.

Colour samples available subject to the limitations of the printing process.



Pebbles hydropanels shown

600mm Tongue and Groove Panels			
Colour	Code	€ Ex VAT	€ Inc VAT
Marble Green Gloss	3.601	219.00	**269.37**
New Marble White Gloss	3.621	223.00	**274.29**
Pacific Blue Granite Gloss	3.608	234.00	**287.82**
White Gloss	3.612	224.00	**275.52**
New Granite Gloss	3.629	234.00	**287.82**
Mother of Pearl Gloss	3.616	226.00	**277.98**
Slate Matt	3.619	238.00	**292.74**
Travertine Gloss	3.626	234.00	**287.82**

2430 mm high, 11mm thick. Please note: Panels are 600mm wide, finished face 585mm.

Accessories			
Description	Code	€ Ex VAT	€ Inc VAT
Hydropanel Adhesive 310ml*	32.005	21.00	**25.83**
Hydropanel Sealant 310ml*	32.006	21.00	**25.83**
Hydropanel Cleaner 500ml	32.007	20.00	**24.60**

*Normal requirement 1 tube per

FEATURES

- Lightweight core material
- Waterproof surface
- Chemical resistant
- Easy clean surface
- Resistant to distortion
- Fade free



End 'U'



Internal



SWATCHES AVAILABLE

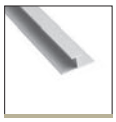

Join 'H'



Anthracite



Silver



Bright Silver

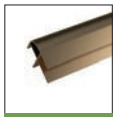

Gold



White



L



Scotia

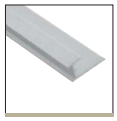

Base Seal



External

Extrusions. All 2430-2440mm lengths.

Straight Edge Stock Panels																
Description	Bright Silver	€ Ex VAT	€ Inc VAT	Satin Silver	€ Ex VAT	€ Inc VAT	White	€ Ex VAT	€ Inc VAT	Gold	€ Ex VAT	€ Inc VAT	Anthracite	€ Ex VAT	€ Inc VAT
Hydropanel Internal	32.311	47.00	**57.81**	32.001	45.00	**55.35**	32.101	47.00	**57.81**	-	-	-	32.301	75.00	**92.25**
Hydropanel External	32.312	52.00	**63.96**	32.002	47.00	**57.81**	32.102	52.00	**63.96**	-	-	-	32.302	80.00	**98.40**
End 'U'	32.313	42.00	**51.66**	32.003	30.00	**36.90**	32.103	34.00	**41.82**	-	-	-	32.303	51.00	**62.73**
Join 'H'	32.314	44.00	**54.12**	32.004	41.00	**50.43**	32.104	45.00	**55.35**	-	-	-	32.304	58.00	**71.34**
'L' shape	32.319	31.00	**38.13**	32.009	27.00	**33.21**	32.109	28.00	**34.44**	-	-	-	-	-	-
Scotia	32.320	41.00	**50.43**	32.010	31.00	**38.13**	32.110	34.00	**41.82**	-	-	-	-	-	-
Base seal	32.318	41.00	**50.43**	32.008	31.00	**38.13**	32.108	31.00	**38.13**	32.208†	42.00	**51.66**	32.308	31.00	**38.13**

Note: Gold is antique, silver is anodised and white is powder coated. †While stocks last

Mirror Gloss Hydropanel

MIRROR GLOSS HYDROPANEL


Mirror Gloss Black


Mirror Gloss Anthracite


Mirror Gloss Brushed Aluminium

Mirror White Gloss

Use our new, highly durable mirror gloss hydropanel to add an extra dimension to your next bathroom project. All panels are 2420mm long and 11mm thick.

Panels

Description	Colour	Code	€ Ex VAT	€ Inc VAT
Mirror gloss hydropanel 1200mm	White	3.700	436.00	**536.28**
Mirror gloss hydropanel 1200mm	Black	3.701	458.00	**563.34**
Mirror gloss hydropanel 1200mm	Anthracite	3.702	597.00	**734.31**
Mirror gloss hydropanel 1200mm	Brushed Aluminium	3.703	597.00	**734.31**

FEATURES
- Mirror gloss surface
- Highly durable surface
- Waterproof surface
- Easy clean
- Fade free

Bright Silver Extrusions

Description	Bright Silver	€ Ex VAT	€ Inc VAT
Hydropanel Internal	32.311	47.00	**57.81**
Hydropanel External	32.312	52.00	**63.96**
End 'U'	32.313	42.00	**51.66**
Join 'H'	32.314	44.00	**54.12**
Base seal	32.318	41.00	**50.43**
'L' shape	32.319	31.00	**38.13**
Scotia	32.320	41.00	**50.43**

Colours are subject to the limitations of the printing process, and should only be used as a guide to colour matching.

NB: As with all decorative products differences in shading can occur between batches. Please ensure you order enough to complete the job in hand.

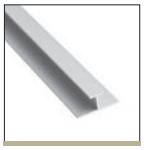
Join 'H'


End 'U'


External


Internal


L


Scotia


Base Seal


Silver


Anthracite


Bright Silver

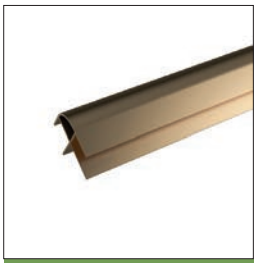
Gold


White

Extrusions: All 2500mm Lengths

Description	Silver	€ Ex VAT	€ Inc VAT	White	€ Ex VAT	€ Inc VAT	Gold	€ Ex VAT	€ Inc VAT	Anthracite	€ Ex VAT	€ Inc VAT
Hydropanel Internal	32.001	45.00	**55.35**	32.101	47.00	**57.81**	-	-	-	32.301	75.00	**92.25**
Hydropanel External	32.002	47.00	**57.81**	32.102	52.00	**63.96**	-	-	-	32.302	80.00	**98.40**
End 'U'	32.003	30.00	**36.90**	32.103	34.00	**41.82**	-	-	-	32.303	51.00	**62.73**
Join 'H'	32.004	41.00	**50.43**	32.104	45.00	**55.35**	-	-	-	32.304	58.00	**71.34**
'L' shape	32.009	27.00	**33.21**	32.109	28.00	**34.44**	-	-	-	-	-	-
Scotia	32.010	31.00	**38.13**	32.110	34.00	**41.82**	-	-	-	-	-	-
Base seal	32.008	31.00	**38.13**	32.108	31.00	**38.13**	32.208†	42.00	**51.66**	32.308	31.00	**38.13**

Note: Gold is antique, silver is anodised and white is powder coated. †While stocks last

Hydropanel Instructions

Instructions

Tongue & Groove or square cut wall panels

General notes on fixing panels

Panels can be fixed directly to battens or walls using Hydropanel panel adhesive. It is recommended that the panels are fixed to battens to provide air space behind. Fix treated timber battens approximately 45mm x 21mm horizontally with one at the head and one at the base of the panels. Additional horizontal battens should be a maximum distance of 500mm apart. They should be parallel to each other and plumb to give a solid ground for fixing the panels with Hydropanel adhesive. Additional battens should be used behind wash hand basins, towel rails and other heavy items to give a secure fixing.

Panel Preparation

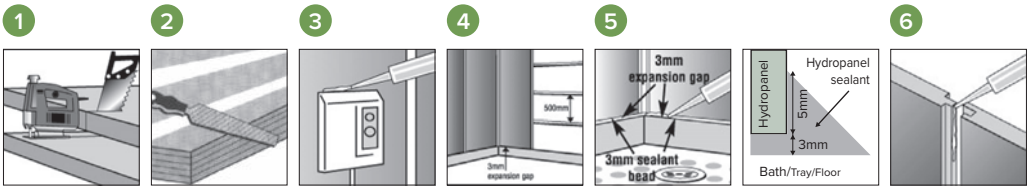

1. Cutting Panels:
Cut panel with pattern facing upwards using a handsaw. If using an electric saw, cut panel with laminate face downwards.

2. Cut Edge Filing:
The panel edge should be filed at a slight angle away from the laminate edge.

3. Pipes and Accessories:
All pipes and accessories require a 3-4mm clearance, allowing them to be sealed with a bead of Hydropanel sealant. If fitting a collar, first seal with Hydropanel sealant.

4. Timber Battens:
(45mm x 21mm) Use battens if walls are uneven, at a maximum distance of 500mm apart. Fix panels to battens using Hydropanel adhesive.

5. Panel Fitting:
Fit panels 3mm above bath, shower tray or floor, with edge downwards. Seal gap with Hydropanel sealant. It is imperative that all edges are sealed and the sealant is taken 5mm up the face of the panel at a 45° angle.

6. Panel & Decor Strip Sealing:
In wet areas such as a bathroom, use Hydropanel sealant inside each profile prior to inserting panel.

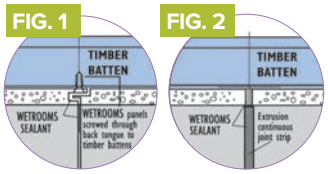

Hydropanel

Tongue & Groove Recommended for continuous panel runs

The vertical edges are tongue and grooved to give the finished panelling a smooth, easily maintained surface. Panels have asymmetrical tongue and grooved vertical edges giving 5mm of joint overlap. A waterproof joint is assured when sealed with Hydropanel sealant.

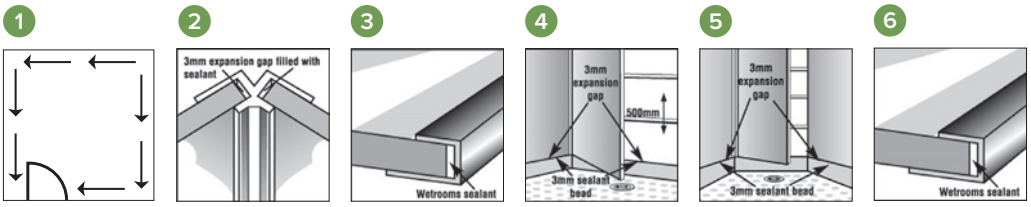

Installation

1. Where to start:

Panel in both directions around the room, starting at the corner furthest from the door. Fit the last panel above the doorway, placed in position tongue first and swung into position. All panels must be correctly aligned and plumb. Use Hydropanel panel adhesive to fix panels to battens. Seal all panel joints using Hydropanel sealant.

2. Begin Panelling:

Fix a Hydropanel internal profile in position first ensuring that it is plumb. Apply Hydropanel sealant to the recess of the profile. Apply Hydropanel adhesive to the battens. After removing the smaller tongue, or cutting to size insert the first panel. Continue to panel away from the corner in both directions, fixing panels to battens with Hydropanel adhesive, and sealing joins with Hydropanel sealant.

3. Continue Panelling:

Continue panelling around the room fixing each panel to the battens with Hydropanel adhesive, or screws through the back lip of grooved edge. Seal tongue and groove joints using Hydropanel sealant. Where appropriate use internal and external corner profiles, sealing with Hydropanel sealant.

Square cut with aluminium joint extrusions which allow for on site cutting, the edges being covered by aluminium trim extrusions. This will facilitate for faster installation.

4. Fit the shower tray hard against or cut into the wall. First cut the panels and profiles to size. Fix a Hydropanel internal profile in position ensure that it is plumb. Apply Hydropanel sealant into profile and insert panels. Fix panels to battens using Hydropanel panel adhesive.

5. First panel is fitted as for the two panel shower enclosure. Put a second internal corner profile onto the edge of second panel, and apply Hydropanel adhesive to the battens. Insert other edge into profile already attached to the wall, and swing into place forming back of enclosure. Fix profile to wall, insert third panel and glue to wall. Ensure a generous bead of Hydropanel sealant is applied into all the profiles.

6. Finish outer panel edges with U-Trim, applying a bead of Hydropanel sealant into the U-Trim. Seal all gaps around the tray with Hydropanel sealant prior to installing the shower door or side panel.

Use the H continuous run decorative aluminium joining and stacking profile to join panels and install in a similar manner to tongue and groove panelling, applying a generous bead of Hydropanel sealant into the profile.

Aluminium Profiles

Available in silver, white and antique gold†

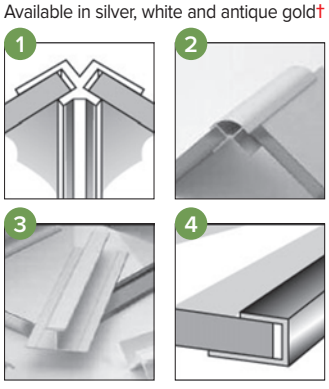

1. Internal corner profile:
2400mm. Used on all internal 90° corners sealing with Hydropanel sealant.

2. External corner profile:
(2500 mm) Used on 90° external corners, sealing with Hydropanel sealant.

3. Joining and stacking profile:
(2500 mm) Used to mount panels side by side, or above each other, sealing with Hydropanel sealant.

4. U-TRIM:
(2500 mm) Finishing touches and cap for square cut edge of panel, sealing with Hydropanel sealant.

Hydropanel Adhesives and Sealants

It is recommended that only Hydropanel's own brand adhesives and sealants are used. Approximately 1 cartridge of Hydropanel adhesive and 1 cartridge of Hydropanel sealant is required for a 800 mm wide panel.

Cleaning and maintenance

The hardwearing surface of the panelling and aluminium profiles can be hygienically cleaned with Hydropanel spray cleaner which is a mild non-abrasive cleaner with anti-bacterial cleanser.

Abrasive cleaners or bleach must not be used.

A large variety of possible applications:

DOMESTIC: Walls of showers, kitchens, wet areas, utility rooms, conservatories, extensions etc.

COMMERCIAL: Hotels (bathrooms, kitchens, wet areas, reception areas, etc). Cafeterias (food preparation areas, kitchens, toilet facilities, etc) offices, shops, hospitals, schools, laboratories, etc.

Standard PVC Panelling

WHITE STANDARD PVC CEILING / WALL PANELLING



Ideal for kitchens, bathrooms and showers

- New 3m long panel in white
- 250mm wide tongue and groove panels
- Wetwall panels for all showers
- Suitable for wet and dry areas
- Suitable for both walls and ceilings
- Easy installation, no wet trades required
- Full range of accessories
- Hygienic wipe clean surface
- Standard PVC Hydropanels and profiles are 2400mm long (Profiles can vary by up to 2%)
- Non-porous and mould free
- H-join decor strips available in silver and gold
- Virtually maintenance free
- No tiling or grouting to discolour or leak
- Excellent insulation and sound proofing
- Class 1 fire rating
- Approx 5mm thickness

White is subject to the limitations of the printing process, and should only be used as a guide to colour matching.

NB: As with all decorative products differences in shading can occur between batches. Please ensure you order enough to complete the job in hand.

White Gloss

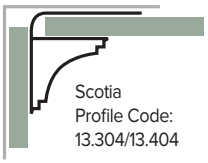
Scotia
Profile Code:
13.304/13.404

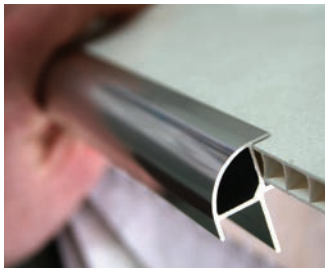

Hardwearing PVC surface suitable for all areas domestic and commercial.

Profiles

Description	White	Black	Silver	Gold	€ Ex VAT	€ Inc VAT
PVC Hydropanel internal corner	13.301	-	13.001	13.201†	21.00	**25.83**
PVC Hydropanel external corner	13.302	13.402	13.002	13.202†	27.00	**33.21**
PVC End cap U	13.303	-	13.003	-	20.00	**24.60**
PVC Join H decor strip	13.306	-	13.006	-	23.00	**28.29**
PVC Scotia	13.304	-	-	-	21.00	**25.83**

FEATURES
- Lightweight core material
- Water resistant
- Easy clean surface

†While stocks last

Panels

Description	Colour	Code	€ Ex VAT	€ Inc VAT
PVC Hydropanel pack of 4 (2.4m2)	White Gloss	13.112	59.00	**72.57**

3 Metre Long White Hydropanel

Description	Colour	Code	€ Ex VAT	€ Inc VAT
PVC Hydropanel pack of 4 x 3m long	White Gloss	13.122	73.00	**89.79**

As with all decorative products differences in shading can occur between batches. Please ensure you order enough for the job in hand and also ensure that shades and colours are checked and approved on site before installation commences.

PVC Panel Instructions

How to Fit the PVC Profiles

- Hygienic, washable and easy to maintain
- Very simple to install
- Can be cut to size very easily
- Save up to 50% of the cost of conventional tiling
- Ideal for bathrooms, showers, kitchens etc
- A wide range of stunning decors
- Excellent insulation and sound proofing
- Recyclable

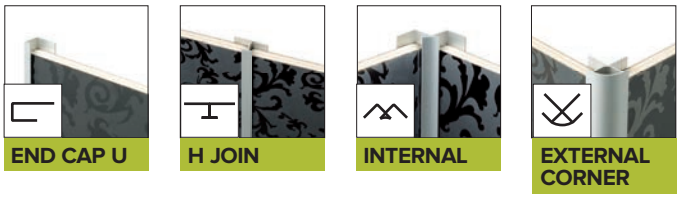

Fix Directly On To Wall

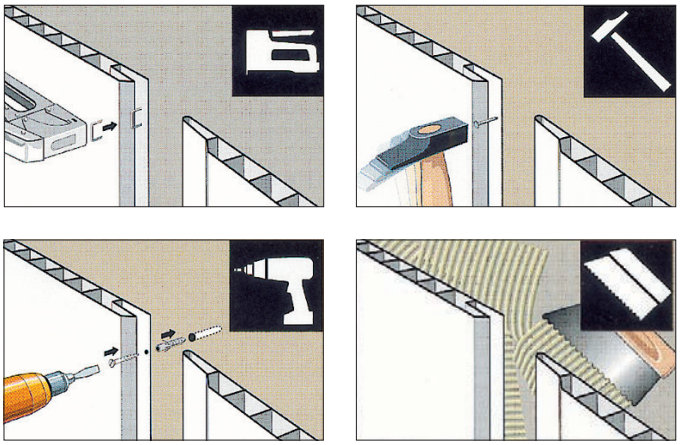

Fix Directly Onto Batten

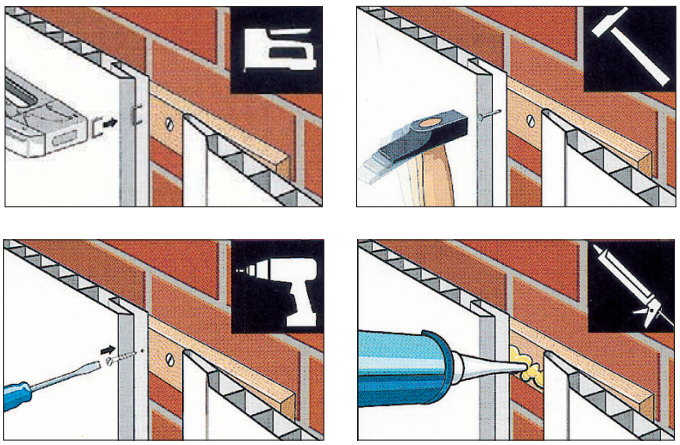

Assembly Instructions

There are two ways to assemble the tongue and groove wall panels. Either glue or fix directly on to the wall if the surface is relatively even and dry. Use 'Wetwall Adhesive' or fix on to a wooden frame. Fixing to timber battens is easy: a staple gun, hammer and nails, screws or 'Wetwall Adhesive' can be used.

To make the wooden frame, strap the wall with wooden battens approx. every 50cm according to the direction of your panel assembly. To install the panels vertically, lath the wall horizontally and vice versa. If the panels are to be placed diagonally, the wall may be lathed either horizontally or vertically.

Start with installing the preferred P.V.C. profiles on the sides (start at edge trim, or inside corner).

Nail, staple, screw or glue the first panel to the wooden battens. Silicone seal all ends, joints and profiles in a wet area such as a shower or around a bath with Wetwall sealant.

Insert the next panel (side with tongue) into the groove of the previous panel. Nail, staple, screw or glue the panel along the tongue on the opposite side. Proceed in a similar manner for the fixing of all panels.

SEALING: To seal the joint between two panels we recommend using 'Wetwall Silicone Sealant' when sealing in wet areas, in the shower or around the bath.

CUTTING: We recommend when using a precision handsaw, cutting the panel with the decorative side upwards. When using an electric saw cut panel with decorative side downwards.

Benefits Of Using Wetroom Adhesives, Sealants And Cleaners

Wetroom Sealant is of the highest quality silicone. It is a fast curing, low modulas, neutral, fungicidal silicone sealant, developed for use with Wetroom panelling, and for general sanitary use.

- Wetroom Sealant forms a strong secure bond even between two non-porous surfaces.
- Wetroom Sealant has a high degree of elasticity, which ensures that the bond remains firm during the natural expansion and contraction of the panelling.
- Wetroom Sealant is designed for high pressure and pumped shower systems.

It is required the only Wetroom's own brand of adhesive sealant and cleaner are used.

Abrasive cleaners and bleaches must not used on Wetroom panelling.



Accessories

Description	Code	€ Ex VAT	€ Inc VAT
Hydropanel Adhesive 310ml*	32.005	21.00	**25.83**
Hydropanel Sealant 310ml*	32.006	21.00	**25.83**
Hydropanel Cleaner 500ml*	32.007	20.00	**24.60**

*Normal requirement one tube per panel. For a packet of four panels, approximately one cartridge of Wetroom adhesive and one cartridge of Wetroom sealant is required.
**Hyrdropanel cleaner is required on surface and panels.

PVC Widepanel

PVC WIDEPANELS



NB: Widepanels 1000mm wide. Shown above Black Marble.

Ideal for walls and ceilings in bathrooms, showers and kitchens

- 1000mm wide tongue and groove Widepanels
- Wetroom Widepanels for all showers
- Suitable for wet and dry areas
- Suitable for both walls and ceilings
- Easy installation, no wet trades required
- Non-porous and mould free
- Full range of accessories
- Hygienic wipe clean surface
- Virtually maintenance free
- PVC Widepanels are 2400mm high by 1000mm wide
- Profiles are 2400mm long (Can vary by up to 2%)
- H-join decor strips available in white and silver
- No tiling or grouting to discolour or leak
- Excellent insulation and sound proofing
- 10.5mm thickness
- Class 1 fire rated for commercial and domestic installations
- Light and easy to fit
- 100% waterproof. No water can be drawn into the core
- Made of recyclable PVC
- Is strong and rigid
- Accessories can be screwed securely onto PVC Widepanels

PVC Widepanel

Hardwearing PVC surface suitable for all areas domestic and commercial


Marble Cream


Black Marble Gloss


Travertine Gloss


Black Sparkle


Carrara Marble

Marble Blue

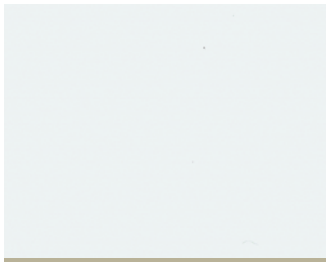
White


Pearl White


White Sparkle


Mother Of Pearl


Concrete Beige Matt



Concrete Dark Matt Grey

PVC Widepanel 1000 x 2400mm				
Colour	Size	Code	€ Ex VAT	€ Inc VAT
Marble blue Gloss	1000x2400mm	13.502	167.00	**205.41**
Carrara marble Gloss	1000x2400mm	13.504	167.00	**205.41**
Marble cream	1000x2400mm	13.507	167.00	**205.41**
White Gloss	1000x2400mm	13.512	167.00	**205.41**
Mother of Pearl	1000x2400mm	13.516	167.00	**205.41**
Travertine	1000x2400mm	13.520	167.00	**205.41**
Pearl White	1000x2400mm	13.521	167.00	**205.41**
Black Marble Gloss	1000x2400mm	13.522	167.00	**205.41**
Black Sparkle	1000x2400mm	13.523	177.00	**217.71**
White Sparkle	1000x2400mm	13.524	177.00	**217.71**
Concrete Beige Matt	1000x2400mm	13.525	167.00	**205.41**
Tuscany Grey Marble	1000x2400mm	13.151	168.00	**206.64**
Concrete Dark Matt Grey	1000x2400mm	13.152	168.00	**206.64**
NB: Panels - range from 2400-2430 height				

NB: All panels are 1000mm wide.



Tuscany Grey Marble

PVC Profiles			
Description	White	€ Ex VAT	€ Inc VAT
PVC Widepanel internal corner	13.311	24.00	**29.52**
PVC Widepanel external corner	13.312	26.00	**31.98**
PVC Widepanel end U	13.313	20.00	**24.60**
PVC Widepanel join H	13.316	23.00	**28.29**

Aluminium Profiles			
Description	Bright Silver	€ Ex VAT	€ Inc VAT
Widepanel aluminium internal	32.311	47.00	**57.81**
Widepanel aluminium external	32.312	52.00	**63.96**
Widepanel aluminium end U	32.313	42.00	**51.66**
Widepanel aluminium join H	32.314	44.00	**54.12**

Colours are subject to the limitations of the printing process, and should only be used as a guide to colour matching.

NB: As with all decorative products differences in shading can occur between batches.

Please ensure you order enough to complete the job in hand and also ensure that shades and colours are checked and approved on site before installation commences.

FEATURES
- PVC Class 1 fire rated
- Lightweight only 12.5 Kg
- Water resistant
- Easy clean surface
- Eco friendly recycled PVC used





RAL Colours / Codes

The RAL codes for the radiator and valve colours in the radiator section are as follows:

Gloss White* : RAL 9016
Matt White* : RAL 9016 Matt
Matt Grey* : RAL 7040 Matt

Matt Cappuccino* : Special Colour (Closest colour RAL 1019 Matt)
Matt Cobalt Blue* : RAL 5013 Matt
Matt Anthracite* : Special colour (Closest colour RAL 7016 Matt)

Matt Black* : RAL 9005 Matt

*Touch Up pens for above colours available, please ask sales/technical for more details.
*Eastbrook radiator colour swatch contains these colours, please don't forget to ask for your copy.

Heated Towel Rails & Radiators

A huge variety of towel rails and radiators from modern to traditional, available in steel, aluminium and stainless steel.

There are a great choice of colours including chrome, brushed brass, gloss white, matt white, matt grey, matt cappuccino, matt cobalt blue, matt anthracite, matt black, polished aluminium and bronze effect / chrome effect. Most of our towel rails and radiators can be powered via dual fuel, single fuel and or all electric.



Contents

The Multirail Range	464-517
The Dry Element Range	518-525
The Stainless Steel Range	526-531
The Designer Range	532-599
The Flat Panel Range	600-607
The Aluminium Range	608-687
The Traditional Range	688-715
Elements	718-729
Valves	730-737
Accessories	738-741
Technical Tables & Drawings	742-807



Sub Section

Multirail Range



Contents

Wingrave Straight, Chrome	466-467
Wingrave Straight, Matt Anthracite	468-469
Wingrave Straight, Matt Cobalt Blue	470-471
Wingrave Straight, Matt Black	472-473
Wingrave Straight, Matt Grey	474-475
Wingrave Straight, Gloss White	476-477
Wingrave Straight, Matt White	478-479
Wingrave Curved, Chrome	480-481
Wingrave Curved, Gloss White	482-483
Wendover Straight, Chrome	484-485
Wendover Curved, Chrome	486-487
Wendover Straight, Gloss White	488
Wendover Curved, Gloss White	489
Wendover Straight, Matt Anthracite	490
Wendover Straight, Brushed Brass - **NEW COLOUR**	491
Biava Multirail Straight, Gloss White	492
Biava Multirail Straight, Chrome	492
Biava Multirail Curved, Gloss White	493
Biava Multirail Curved, Chrome	493
Biava Multirail HV Straight, Available in 5 colours - **NEW COLOUR**	494-496
Tuscan, Gloss White & Chrome	497
Westward Straight, Gloss White & Chrome	498-499
Rion Multirail, Available in 4 colours - **NEW PRODUCT**	500-501
Corinium Round, Available in 5 colours	502-503
Tuscan Round, Available in 5 colours	504-505
Biava Round, Gloss White & Chrome	506
Biava Tube on Tube, Chrome	507
Launton, Available in 3 colours	508-509
Haddenham, Available in 3 colours	510-511
Biava Square, Chrome	512
Tuscan Square, Available in 5 colours	513-515
Tuscan Square Multirail, Available in 4 colours - **NEW PRODUCT**	516-517

Multirail Range

WINGRAVE - STRAIGHT, CHROME

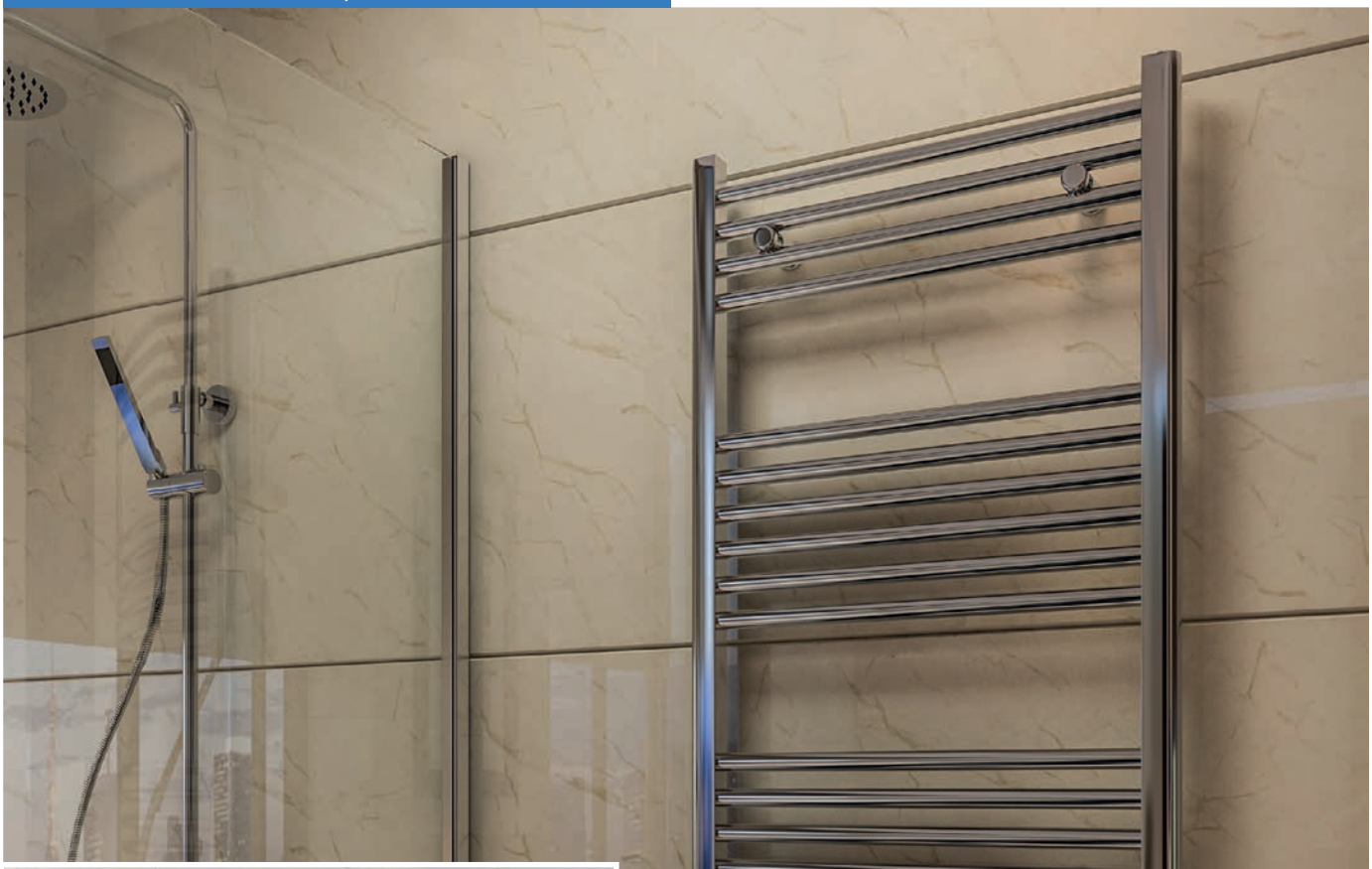

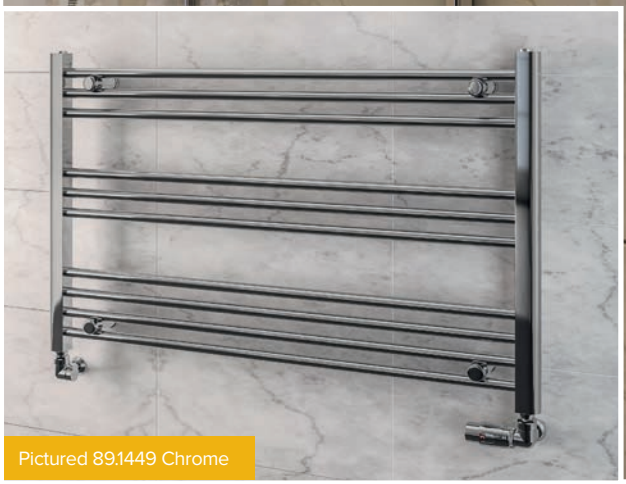

Pictured 89.1449 Chrome

Pictured 89.0095 Chrome

A contemporary straight towel radiator range which comes in chrome, matt anthracite, matt cobalt blue, matt black, matt grey, gloss white and matt white finishes. With a wide variety of sizes, this range not only adds to your bathroom with design simplicity but also keeps your towels warm.

FEATURES
- 22mm diameter horizontal round tubes
- Wide range of sizes to fit in all spaces
- Horizontal sizes to fit under windows
- Tested to BS EN 442 standards
- 5 Year manufacturer's warranty*
- Can be single or dual fuel, or all electric

* With conditions

Technical Tables & Drawings
Page 742-743

Warranty 5 Year | Diameter (Ø) 22 MM Bars | Heating | All Electric | Dual-Fuel

600mm High



800mm High



Multirail Range

WINGRAVE - STRAIGHT, CHROME

Wingrave - Straight Chrome 600mm Height

Size H x W	Watts	BTU	Element Output	Element Type	Code	€ Ex VAT	€ Inc VAT
600 x 300mm	131	447	150W	D, E, F, G	89.0686	119.00	**146.37**
600 x 400mm	167	570	150W	D, E, F, G	89.0687	128.00	**157.44**
600 x 500mm	200	683	100W	A, A+, D, E, F, G	89.0688	142.00	**174.66**
600 x 600mm	233	795	150W	A, A+, D, E, F, G	89.0689	157.00	**193.11**
600 x 1000mm	355	1212	150W	A, A+, D, F, G	89.1449	254.00	**312.42**
600 x 1200mm	413	1410	150W	A, A+, D, F, G	89.1450	280.00	**344.40**

Wingrave - Straight Chrome 800mm Height

Size H x W	Watts	BTU	Element Output	Element Type	Code	€ Ex VAT	€ Inc VAT
800 x 300mm	171	584	150W	D, E, F, G	89.0690	128.00	**157.44**
800 x 400mm	217	741	150W	A, A+, D, E, F, G	89.0083	135.00	**166.05**
800 x 500mm	261	891	150W	A, A+, D, E, F, G	89.0088	154.00	**189.42**
800 x 600mm	303	1034	150W	A, A+, D, E, F, G	89.0093	168.00	**206.64**

Wingrave - Straight Chrome 1000mm Height

Size H x W	Watts	BTU	Element Output	Element Type	Code	€ Ex VAT	€ Inc VAT
1000 x 300mm	212	724	150W	A, A+, D, E, F, G	89.0691	149.00	**183.27**
1000 x 400mm	269	918	150W	A, A+, D, E, F, G	89.0084	161.00	**198.03**
1000 x 500mm	324	1106	150W	A, A+, D, E, F, G	89.0089	180.00	**221.40**
1000 x 600mm	376	1283	150W	A, A+, D, E, F, G	89.0094	195.00	**239.85**

Wingrave - Straight Chrome 1200mm Height

Size H x W	Watts	BTU	Element Output	Element Type	Code	€ Ex VAT	€ Inc VAT
1200 x 300mm	256	874	150W	A, A+, D, E, F, G	89.0692	174.00	**214.02**
1200 x 400mm	324	1106	150W	A, A+, D, E, F, G	89.0085	185.00	**227.55**
1200 x 500mm	390	1331	150W	A, A+, D, E, F, G	89.0090	208.00	**255.84**
1200 x 600mm	454	1550	300W	A, A+, D, E, F, G	89.0095	231.00	**284.13**

Wingrave - Straight Chrome 1400mm Height

Size H x W	Watts	BTU	Element Output	Element Type	Code	€ Ex VAT	€ Inc VAT
1400 x 300mm	302	1031	150W	A, A+, D, E, F, G	89.0693	224.00	**275.52**
1400 x 400mm	383	1307	150W	A, A+, D, E, F, G	89.0530	237.00	**291.51**
1400 x 500mm	461	1573	150W	A, A+, D, E, F, G	89.0531	257.00	**316.11**
1400 x 600mm	536	1829	300W	A, A+, D, E, F, G	89.0532	278.00	**341.94**

Wingrave - Straight Chrome 1600mm Height

Size H x W	Watts	BTU	Element Output	Element Type	Code	€ Ex VAT	€ Inc VAT
1600 x 300mm	352	1202	150W	A, A+, D, E, F, G	89.0694	231.00	**284.13**
1600 x 400mm	446	1522	150W	A, A+, D, E, F, G	89.0086	247.00	**303.81**
1600 x 500mm	537	1833	300W	A, A+, D, E, F, G	89.0091	271.00	**333.33**
1600 x 600mm	624	2130	300W	A, A+, D, E, F, G	89.0096	292.00	**359.16**

Wingrave - Straight Chrome 1800mm Height

Size H x W	Watts	BTU	Element Output	Element Type	Code	€ Ex VAT	€ Inc VAT
1800 x 300mm	405	1382	150W	A, A+, D, E, F, G	89.0695	255.00	**313.65**
1800 x 400mm	514	1754	300W	A, A+, D, E, F, G	89.0087	273.00	**335.79**
1800 x 500mm	618	2109	300W	A, A+, D, E, F, G	89.0092	306.00	**376.38**
1800 x 600mm	719	2454	450W	A, A+, D, E, F, G	89.0097	328.00	**403.44**

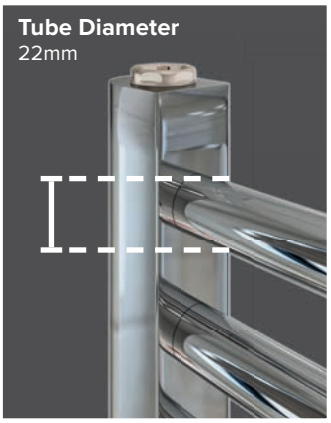

Room Divider Bracket Sets
Page 739



Vent Caps
Page 741



Multi-Rail Hangers
Page 738



Robe Hooks & Hangers
Page 738



TECHNICAL INFORMATION

All measurements in Height by Width. Heat output based on ▲T60˚C. Radiators that are electric only are restricted to the heat output of the elements. Element size can be increased to full capacity of rail if using element type D, E, F or G. For element types see pages 718-729. For matching valves see pages 731-737. For indirect heating systems only. Tappings are approx. 44mm less than the width of the rail and approx. 65mm off the wall. Price includes radiator and wall fixing sets, valves extra.

1000mm High



1200mm High



1400mm High



1600mm High



1800mm High



Multirail Range

WINGRAVE - STRAIGHT, MATT ANTHRACITE



Pictured 89.1446 Matt Anthracite

Pictured 89.0074 Matt Anthracite

A contemporary straight towel radiator range which comes in chrome, matt anthracite, matt cobalt blue, matt black, matt grey, gloss white and matt white finishes. With a wide variety of sizes, this range not only adds to your bathroom with design simplicity but also keeps your towels warm.

FEATURES

- 22mm diameter horizontal round tubes
- Wide range of sizes to fit in all spaces
- Horizontal sizes to fit under windows
- Tested to BS EN 442 standards
- 5 Year manufacturer's warranty*
- Can be single or dual fuel, or all electric

* With conditions

Technical Tables & Drawings
Page 742-743

Warranty 5 Year

Diameter (Ø) 22 MM Bars

Heating

All Electric

Dual-Fuel

600mm High

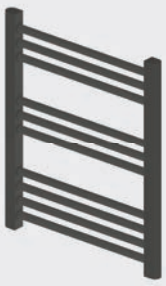

800mm High



Multirail Range

WINGRAVE - STRAIGHT, MATT ANTHRACITE

Wingrave - Straight Matt Anthracite 600mm Height

Size H x W	Watts	BTU	Element Output	Element Type	Code	€ Ex VAT	€ Inc VAT
600 x 300mm	204	697	100W	A, A+, D, E, F, G	89.0666	82.00	**100.86**
600 x 400mm	257	877	150W	A, A+, D, E, F, G	89.0667	84.00	**103.32**
600 x 500mm	309	1055	150W	A, A+, D, E, F, G	89.0668	91.00	**111.93**
600 x 600mm	358	1222	150W	A, A+, D, E, F, G	89.0669	96.00	**118.08**
600 x 1000mm	543	1853	300W	A, A+, D, F, G	89.1445	167.00	**205.41**
600 x 1200mm	629	2147	300W	A, A+, D, F, G	89.1446	182.00	**223.86**

Wingrave - Straight Matt Anthracite 800mm Height

Size H x W	Watts	BTU	Element Output	Element Type	Code	€ Ex VAT	€ Inc VAT
800 x 300mm	266	908	150W	A, A+, D, E, F, G	89.0670	84.00	**103.32**
800 x 400mm	337	1150	150W	A, A+, D, E, F, G	89.0068	98.00	**120.54**
800 x 500mm	404	1379	150W	A, A+, D, E, F, G	89.0073	107.00	**131.61**
800 x 600mm	468	1597	300W	A, A+, D, E, F, G	89.0078	112.00	**137.76**

Wingrave - Straight Matt Anthracite 1000mm Height

Size H x W	Watts	BTU	Element Output	Element Type	Code	€ Ex VAT	€ Inc VAT
1000 x 300mm	331	1130	150W	A, A+, D, E, F, G	89.0671	96.00	**118.08**
1000 x 400mm	419	1430	150W	A, A+, D, E, F, G	89.0069	112.00	**137.76**
1000 x 500mm	502	1713	300W	A, A+, D, E, F, G	89.0074	119.00	**146.37**
1000 x 600mm	582	1986	300W	A, A+, D, E, F, G	89.0079	129.00	**158.67**

Wingrave - Straight Matt Anthracite 1200mm Height

Size H x W	Watts	BTU	Element Output	Element Type	Code	€ Ex VAT	€ Inc VAT
1200 x 300mm	398	1358	150W	A, A+, D, E, F, G	89.0672	111.00	**136.53**
1200 x 400mm	503	1717	300W	A, A+, D, E, F, G	89.0070	129.00	**158.67**
1200 x 500mm	604	2061	300W	A, A+, D, E, F, G	89.0075	135.00	**166.05**
1200 x 600mm	700	2389	300W	A, A+, D, E, F, G	89.0080	145.00	**178.35**

Wingrave - Straight Matt Anthracite 1400mm Height

Size H x W	Watts	BTU	Element Output	Element Type	Code	€ Ex VAT	€ Inc VAT
1400 x 300mm	468	1597	150W	A, A+, D, E, F, G	89.0673	128.00	**157.44**
1400 x 400mm	592	2020	300W	A, A+, D, E, F, G	89.0533	145.00	**178.35**
1400 x 500mm	710	2423	300W	A, A+, D, E, F, G	89.0534	157.00	**193.11**
1400 x 600mm	824	2812	450W	A, A+, D, E, F, G	89.0535	168.00	**206.64**

Wingrave - Straight Matt Anthracite 1600mm Height

Size H x W	Watts	BTU	Element Output	Element Type	Code	€ Ex VAT	€ Inc VAT
1600 x 300mm	542	1850	300W	A, A+, D, E, F, G	89.0674	133.00	**163.59**
1600 x 400mm	685	2338	300W	A, A+, D, E, F, G	89.0071	159.00	**195.57**
1600 x 500mm	821	2802	450W	A, A+, D, E, F, G	89.0076	170.00	**209.10**
1600 x 600mm	953	3252	450W	A, A+, D, E, F, G	89.0081	180.00	**221.40**

Wingrave - Straight Matt Anthracite 1800mm Height

Size H x W	Watts	BTU	Element Output	Element Type	Code	€ Ex VAT	€ Inc VAT
1800 x 300mm	619	2113	300W	A, A+, D, E, F, G	89.0675	149.00	**183.27**
1800 x 400mm	782	2669	450W	A, A+, D, E, F, G	89.0072	173.00	**212.79**
1800 x 500mm	938	3201	450W	A, A+, D, E, F, G	89.0077	203.00	**249.69**
1800 x 600mm	1088	3713	600W	A, A+, D, E, F, G	89.0082	205.00	**252.15**

Tube Diameter
22mm

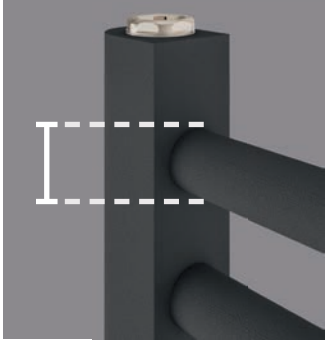

Room Divider Bracket Sets
Page 739



Robe Hooks & Hangers
Page 738



Multi-Rail Hangers
Page 738



Vent Caps
Page 741



TECHNICAL INFORMATION

All measurements in Height by Width. Heat output based on ▲T60˚C. Radiators that are electric only are restricted to the heat output of the elements. Element size can be increased to full capacity of rail if using element type D, E, F or G. For element types see pages 718-729. For matching valves see pages 731-737. For indirect heating systems only. Tappings are approx. 44mm less than the width of the rail and approx. 65mm off the wall. Price includes radiator and wall fixing sets, valves extra.

1000mm High



1200mm High

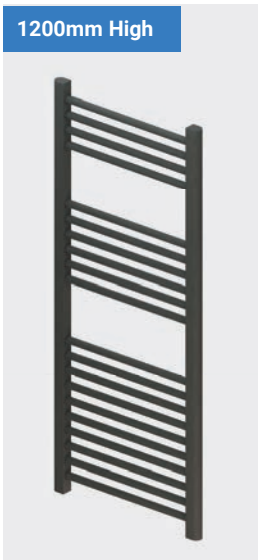

1400mm High

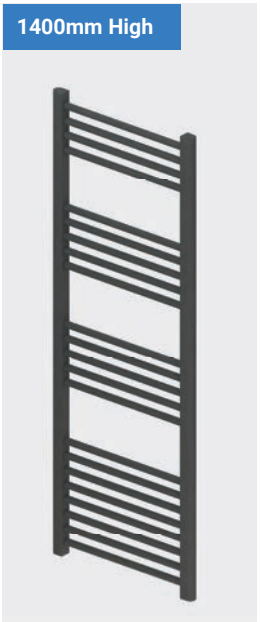

1600mm High

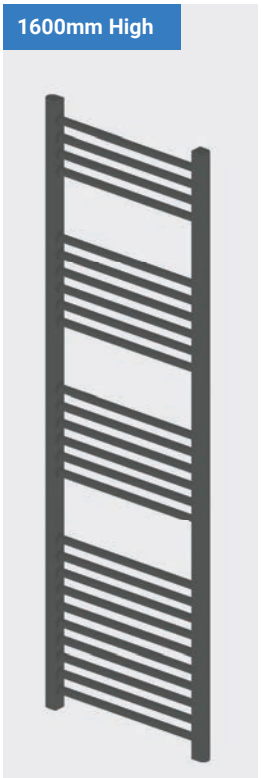

1800mm High



Multirail Range

WINGRAVE - STRAIGHT, MATT COBALT BLUE



Pictured 89.1607 Matt Cobalt Blue

Technical Tables & Drawings
Page 742-743

A modern ladder towel rail in a stunning matt cobalt blue finish. This rail will add a touch of class to finish off your bathroom.

FEATURES
- 22mm diameter horizontal round tubes
- Wide range of sizes to fit in all spaces
- Tested to BS EN 442 standards
- 5 Year manufacturer's warranty*
- Can be single or dual fuel, or all electric

* With conditions

Wingrave - Straight Matt Cobalt Blue

Size H x W	Watts	BTU	Element Output	Element Type	Code	€ Ex VAT	€ Inc VAT
1200 x 500mm	604	2061	300W	A, A+, D, E, F, G	89.1602	135.00	**166.05**
1200 x 600mm	700	2389	300W	A, A+, D, E, F, G	89.1603	145.00	**178.35**
1600 x 500mm	821	2802	450W	A, A+, D, E, F, G	89.1604	170.00	**209.10**
1600 x 600mm	953	3252	450W	A, A+, D, E, F, G	89.1605	180.00	**221.40**
1800 x 500mm	938	3201	450W	A, A+, D, E, F, G	89.1606	203.00	**249.69**
1800 x 600mm	1088	3713	600W	A, A+, D, E, F, G	89.1607	205.00	**252.15**

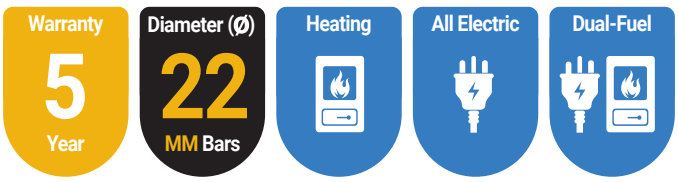

Radiator Valves
Page 731-737



Multirail Range


Pictured 89.1602 Matt Cobalt Blue

WINGRAVE - STRAIGHT, MATT COBALT BLUE


Pictured 89.1605 Matt Cobalt Blue

Round Vent Caps
Page 741



Robe Hooks
Page 738



Room Divider Bracket Sets
Page 739



Multi-Rail Hangers
Page 738



Tube Diameter
22mm



1200mm High



1600mm High



1800mm High



TECHNICAL INFORMATION

All measurements in Height by Width. Heat output based on ▲T60˚C. Radiators that are electric only are restricted to the heat output of the elements. Element size can be increased to full capacity of rail if using element type D, E, F or G. For element types see pages 718-729. For matching valves see pages 731-737. For indirect heating systems only. Tappings are approx. 44mm less than the width of the rail and approx. 65mm off the wall. Price includes radiator and wall fixing sets, valves extra.

Multirail Range

WINGRAVE - STRAIGHT, MATT BLACK



Pictured 89.1447 Matt Black

Pictured 89.0606 Matt Black

A contemporary straight towel radiator range which comes in chrome, matt anthracite, matt cobalt blue, matt black, matt grey, gloss white and matt white finishes. With a wide variety of sizes, this range not only adds to your bathroom with design simplicity but also keeps your towels warm.

FEATURES
- 22mm diameter horizontal round tubes
- Wide range of sizes to fit in all spaces
- Horizontal sizes to fit under windows
- Tested to BS EN 442 standards
- 5 Year manufacturer's warranty*
- Can be single or dual fuel, or all electric

* With conditions

Technical Tables & Drawings
Page 742-743

Warranty 5 Year

Diameter (Ø) 22 MM Bars

Heating

All Electric

Dual-Fuel

600mm High



800mm High



Multirail Range

WINGRAVE - STRAIGHT, MATT BLACK

Wingrave - Straight Matt Black 600mm Height

Size H x W	Watts	BTU	Element Output	Element Type	Code	€ Ex VAT	€ Inc VAT
600 x 300mm	204	697	100W	A, A+, D, E, F, G	89.0676	82.00	**100.86**
600 x 400mm	257	877	150W	A, A+, D, E, F, G	89.0677	84.00	**103.32**
600 x 500mm	309	1055	150W	A, A+, D, E, F, G	89.0678	91.00	**111.93**
600 x 600mm	358	1222	150W	A, A+, D, E, F, G	89.0679	96.00	**118.08**
600 x 1000mm	543	1853	300W	A, A+, D, F, G	89.1447	167.00	**205.41**
600 x 1200mm	629	2147	300W	A, A+, D, F, G	89.1448	182.00	**223.86**

Wingrave - Straight Matt Black 800mm Height

Size H x W	Watts	BTU	Element Output	Element Type	Code	€ Ex VAT	€ Inc VAT
800 x 300mm	266	908	150W	A, A+, D, E, F, G	89.0680	84.00	**103.32**
800 x 400mm	337	1150	150W	A, A+, D, E, F, G	89.0596	98.00	**120.54**
800 x 500mm	404	1379	150W	A, A+, D, E, F, G	89.0597	107.00	**131.61**
800 x 600mm	468	1597	300W	A, A+, D, E, F, G	89.0598	112.00	**137.76**

Wingrave - Straight Matt Black 1000mm Height

Size H x W	Watts	BTU	Element Output	Element Type	Code	€ Ex VAT	€ Inc VAT
1000 x 300mm	331	1130	150W	A, A+, D, E, F, G	89.0681	96.00	**118.08**
1000 x 400mm	419	1430	150W	A, A+, D, E, F, G	89.0599	112.00	**137.76**
1000 x 500mm	502	1713	300W	A, A+, D, E, F, G	89.0600	119.00	**146.37**
1000 x 600mm	582	1986	300W	A, A+, D, E, F, G	89.0601	129.00	**158.67**

Wingrave - Straight Matt Black 1200mm Height

Size H x W	Watts	BTU	Element Output	Element Type	Code	€ Ex VAT	€ Inc VAT
1200 x 300mm	398	1358	150W	A, A+, D, E, F, G	89.0682	111.00	**136.53**
1200 x 400mm	503	1717	300W	A, A+, D, E, F, G	89.0602	129.00	**158.67**
1200 x 500mm	604	2061	300W	A, A+, D, E, F, G	89.0603	135.00	**166.05**
1200 x 600mm	700	2389	300W	A, A+, D, E, F, G	89.0604	145.00	**178.35**

Wingrave - Straight Matt Black 1400mm Height

Size H x W	Watts	BTU	Element Output	Element Type	Code	€ Ex VAT	€ Inc VAT
1400 x 300mm	468	1597	150W	A, A+, D, E, F, G	89.0683	128.00	**157.44**
1400 x 400mm	592	2020	300W	A, A+, D, E, F, G	89.0605	145.00	**178.35**
1400 x 500mm	710	2423	300W	A, A+, D, E, F, G	89.0606	157.00	**193.11**
1400 x 600mm	824	2812	450W	A, A+, D, E, F, G	89.0607	168.00	**206.64**

Wingrave - Straight Matt Black 1600mm Height

Size H x W	Watts	BTU	Element Output	Element Type	Code	€ Ex VAT	€ Inc VAT
1600 x 300mm	542	1850	300W	A, A+, D, E, F, G	89.0684	133.00	**163.59**
1600 x 400mm	685	2338	300W	A, A+, D, E, F, G	89.0608	159.00	**195.57**
1600 x 500mm	821	2802	450W	A, A+, D, E, F, G	89.0609	170.00	**209.10**
1600 x 600mm	953	3252	450W	A, A+, D, E, F, G	89.0610	180.00	**221.40**

Wingrave - Straight Matt Black 1800mm Height

Size H x W	Watts	BTU	Element Output	Element Type	Code	€ Ex VAT	€ Inc VAT
1800 x 300mm	619	2113	300W	A, A+, D, E, F, G	89.0685	149.00	**183.27**
1800 x 400mm	782	2669	450W	A, A+, D, E, F, G	89.0611	173.00	**212.79**
1800 x 500mm	938	3201	450W	A, A+, D, E, F, G	89.0612	203.00	**249.69**
1800 x 600mm	1088	3713	600W	A, A+, D, E, F, G	89.0613	205.00	**252.15**

Tube Diameter
22mm

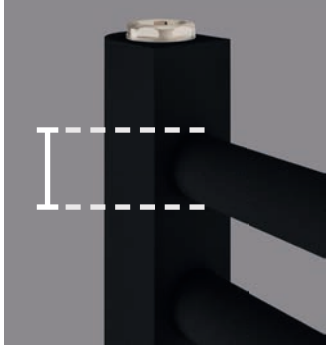

Room Divider Bracket Sets
Page 739



Vent Caps
Page 741



Multi-Rail Hangers
Page 738



Robe Hooks & Hangers
Page 738



TECHNICAL INFORMATION

All measurements in Height by Width. Heat output based on ▲T60˚C. Radiators that are electric only are restricted to the heat output of the elements. Element size can be increased to full capacity of rail if using element type D, E, F or G. For element types see pages 718-729. For matching valves see pages 731-737. For indirect heating systems only. Tappings are approx. 44mm less than the width of the rail and approx. 65mm off the wall. Price includes radiator and wall fixing sets, valves extra.

1000mm High



1200mm High



1400mm High



1600mm High



1800mm High



Multirail Range

WINGRAVE - STRAIGHT, MATT GREY



Pictured 89.1443 Matt Grey

Pictured 89.1425 Matt Grey

A contemporary straight towel radiator range which comes in chrome, matt anthracite, matt cobalt blue, matt black, matt grey, gloss white and matt white finishes. With a wide variety of sizes, this range not only adds to your bathroom with design simplicity but also keeps your towels warm.

FEATURES
- 22mm diameter horizontal round tubes
- Wide range of sizes to fit in all spaces
- Horizontal sizes to fit under windows
- Tested to BS EN 442 standards
- 5 Year manufacturer's warranty*
- Can be single or dual fuel, or all electric

* With conditions

Technical Tables & Drawings
Page 742-743

Warranty 5 Year

Diameter (Ø) 22 MM Bars

Heating

All Electric

Dual-Fuel

600mm High



800mm High



Multirail Range

WINGRAVE - STRAIGHT, MATT GREY

Wingrave - Straight Matt Grey 600mm Height

Size H x W	Watts	BTU	Element Output	Element Type	Code	€ Ex VAT	€ Inc VAT
600 x 300mm	204	697	100W	A, A+, D, E, F, G	89.1411	82.00	**100.86**
600 x 400mm	257	877	150W	A, A+, D, E, F, G	89.1412	84.00	**103.32**
600 x 500mm	309	1055	150W	A, A+, D, E, F, G	89.1413	91.00	**111.93**
600 x 600mm	358	1222	150W	A, A+, D, E, F, G	89.1414	96.00	**118.08**
600 x 1000mm	543	1853	300W	A, A+, D, F, G	89.1443	167.00	**205.41**
600 x 1200mm	629	2147	300W	A, A+, D, F, G	89.1444	182.00	**223.86**

Wingrave - Straight Matt Grey 800mm Height

Size H x W	Watts	BTU	Element Output	Element Type	Code	€ Ex VAT	€ Inc VAT
800 x 300mm	266	908	150W	A, A+, D, E, F, G	89.1415	84.00	**103.32**
800 x 400mm	337	1150	150W	A, A+, D, E, F, G	89.1416	98.00	**120.54**
800 x 500mm	404	1379	150W	A, A+, D, E, F, G	89.1417	107.00	**131.61**
800 x 600mm	468	1597	300W	A, A+, D, E, F, G	89.1418	112.00	**137.76**

Wingrave - Straight Matt Grey 1000mm Height

Size H x W	Watts	BTU	Element Output	Element Type	Code	€ Ex VAT	€ Inc VAT
1000 x 300mm	331	1130	150W	A, A+, D, E, F, G	89.1419	96.00	**118.08**
1000 x 400mm	419	1430	150W	A, A+, D, E, F, G	89.1420	112.00	**137.76**
1000 x 500mm	502	1713	300W	A, A+, D, E, F, G	89.1421	119.00	**146.37**
1000 x 600mm	582	1986	300W	A, A+, D, E, F, G	89.1422	129.00	**158.67**

Wingrave - Straight Matt Grey 1200mm Height

Size H x W	Watts	BTU	Element Output	Element Type	Code	€ Ex VAT	€ Inc VAT
1200 x 300mm	398	1358	150W	A, A+, D, E, F, G	89.1423	111.00	**136.53**
1200 x 400mm	503	1717	300W	A, A+, D, E, F, G	89.1424	129.00	**158.67**
1200 x 500mm	604	2061	300W	A, A+, D, E, F, G	89.1425	135.00	**166.05**
1200 x 600mm	700	2389	300W	A, A+, D, E, F, G	89.1426	145.00	**178.35**

Wingrave - Straight Matt Grey 1400mm Height

Size H x W	Watts	BTU	Element Output	Element Type	Code	€ Ex VAT	€ Inc VAT
1400 x 300mm	468	1597	150W	A, A+, D, E, F, G	89.1427	128.00	**157.44**
1400 x 400mm	592	2020	300W	A, A+, D, E, F, G	89.1428	145.00	**178.35**
1400 x 500mm	710	2423	300W	A, A+, D, E, F, G	89.1429	157.00	**193.11**
1400 x 600mm	824	2812	450W	A, A+, D, E, F, G	89.1430	168.00	**206.64**

Wingrave - Straight Matt Grey 1600mm Height

Size H x W	Watts	BTU	Element Output	Element Type	Code	€ Ex VAT	€ Inc VAT
1600 x 300mm	542	1850	300W	A, A+, D, E, F, G	89.1431	133.00	**163.59**
1600 x 400mm	685	2338	300W	A, A+, D, E, F, G	89.1432	159.00	**195.57**
1600 x 500mm	821	2802	450W	A, A+, D, E, F, G	89.1433	170.00	**209.10**
1600 x 600mm	953	3252	450W	A, A+, D, E, F, G	89.1434	180.00	**221.40**

Wingrave - Straight Matt Grey 1800mm Height

Size H x W	Watts	BTU	Element Output	Element Type	Code	€ Ex VAT	€ Inc VAT
1800 x 300mm	619	2113	300W	A, A+, D, E, F, G	89.1435	149.00	**183.27**
1800 x 400mm	782	2669	450W	A, A+, D, E, F, G	89.1436	173.00	**212.79**
1800 x 500mm	938	3201	450W	A, A+, D, E, F, G	89.1437	203.00	**249.69**
1800 x 600mm	1088	3713	600W	A, A+, D, E, F, G	89.1438	205.00	**252.15**

Tube Diameter
22mm

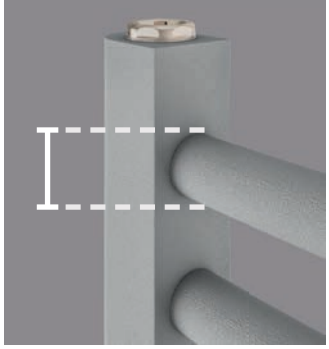

Room Divider Bracket Sets
Page 739



Vent Caps
Page 741



Multi-Rail Hangers
Page 738



Robe Hooks & Hangers
Page 738



TECHNICAL INFORMATION

All measurements in Height by Width. Heat output based on ▲T60˚C. Radiators that are electric only are restricted to the heat output of the elements. Element size can be increased to full capacity of rail if using element type D, E, F or G. For element types see pages 718-729. For matching valves see pages 731-737. For indirect heating systems only. Tappings are approx. 44mm less than the width of the rail and approx. 65mm off the wall. Price includes radiator and wall fixing sets, valves extra.

1000mm High



1200mm High



1400mm High



1600mm High



1800mm High



Multirail Range

WINGRAVE - STRAIGHT, GLOSS WHITE



Pictured 89.0127 Gloss White



Pictured 89.0122 Gloss White with 16.153 Room Divider Bracket Set

A contemporary straight towel radiator range which comes in chrome, matt anthracite, matt cobalt blue, matt black, matt grey, gloss white and matt white finishes. With a wide variety of sizes, this range not only adds to your bathroom with design simplicity but also keeps your towels warm.

FEATURES

- 22mm diameter horizontal round tubes
- Wide range of sizes to fit in all spaces
- Horizontal sizes to fit under windows
- Tested to BS EN 442 standards
- 5 Year manufacturer's warranty*
- Can be single or dual fuel, or all electric

* With conditions

Technical Tables & Drawings
Page 742-743

Warranty 5 Year | Diameter (Ø) 22 MM Bars | Heating | All Electric | Dual-Fuel

600mm High



800mm High



Multirail Range

WINGRAVE - STRAIGHT, GLOSS WHITE

Wingrave - Straight Gloss White 600mm Height

Size H x W	Watts	BTU	Element Output	Element Type	Code	€ Ex VAT	€ Inc VAT
600 x 300mm	204	697	100W	A, A+, D, E, F, G	89.0646	80.00	**98.40**
600 x 400mm	257	877	150W	A, A+, D, E, F, G	89.0647	82.00	**100.86**
600 x 500mm	309	1055	150W	A, A+, D, E, F, G	89.0648	86.00	**105.78**
600 x 600mm	358	1222	150W	A, A+, D, E, F, G	89.0649	91.00	**111.93**
600 x 1000mm	543	1853	300W	A, A+, D, F, G	89.1439	167.00	**205.41**
600 x 1200mm	629	2147	300W	A, A+, D, F, G	89.1440	182.00	**223.86**

Wingrave - Straight Gloss White 800mm Height

Size H x W	Watts	BTU	Element Output	Element Type	Code	€ Ex VAT	€ Inc VAT
800 x 300mm	266	908	150W	A, A+, D, E, F, G	89.0650	82.00	**100.86**
800 x 400mm	337	1150	150W	A, A+, D, E, F, G	89.0113	91.00	**111.93**
800 x 500mm	404	1379	150W	A, A+, D, E, F, G	89.0118	97.00	**119.31**
800 x 600mm	468	1597	300W	A, A+, D, E, F, G	89.0123	104.00	**127.92**

Wingrave - Straight Gloss White 1000mm Height

Size H x W	Watts	BTU	Element Output	Element Type	Code	€ Ex VAT	€ Inc VAT
1000 x 300mm	331	1130	150W	A, A+, D, E, F, G	89.0651	91.00	**111.93**
1000 x 400mm	419	1430	150W	A, A+, D, E, F, G	89.0114	104.00	**127.92**
1000 x 500mm	502	1713	300W	A, A+, D, E, F, G	89.0119	112.00	**137.76**
1000 x 600mm	582	1986	300W	A, A+, D, E, F, G	89.0124	118.00	**145.14**

Wingrave - Straight Gloss White 1200mm Height

Size H x W	Watts	BTU	Element Output	Element Type	Code	€ Ex VAT	€ Inc VAT
1200 x 300mm	398	1358	150W	A, A+, D, E, F, G	89.0652	105.00	**129.15**
1200 x 400mm	503	1717	300W	A, A+, D, E, F, G	89.0115	118.00	**145.14**
1200 x 500mm	604	2061	300W	A, A+, D, E, F, G	89.0120	122.00	**150.06**
1200 x 600mm	700	2389	300W	A, A+, D, E, F, G	89.0125	133.00	**163.59**

Wingrave - Straight Gloss White 1400mm Height

Size H x W	Watts	BTU	Element Output	Element Type	Code	€ Ex VAT	€ Inc VAT
1400 x 300mm	468	1597	150W	A, A+, D, E, F, G	89.0653	128.00	**157.44**
1400 x 400mm	592	2020	300W	A, A+, D, E, F, G	89.0536	136.00	**167.28**
1400 x 500mm	710	2423	300W	A, A+, D, E, F, G	89.0537	146.00	**179.58**
1400 x 600mm	824	2812	450W	A, A+, D, E, F, G	89.0538	161.00	**198.03**

Wingrave - Straight Gloss White 1600mm Height

Size H x W	Watts	BTU	Element Output	Element Type	Code	€ Ex VAT	€ Inc VAT
1600 x 300mm	542	1850	300W	A, A+, D, E, F, G	89.0654	129.00	**158.67**
1600 x 400mm	685	2338	300W	A, A+, D, E, F, G	89.0116	142.00	**174.66**
1600 x 500mm	821	2802	450W	A, A+, D, E, F, G	89.0121	157.00	**193.11**
1600 x 600mm	953	3252	450W	A, A+, D, E, F, G	89.0126	168.00	**206.64**

Wingrave - Straight Gloss White 1800mm Height

Size H x W	Watts	BTU	Element Output	Element Type	Code	€ Ex VAT	€ Inc VAT
1800 x 300mm	619	2113	300W	A, A+, D, E, F, G	89.0655	142.00	**174.66**
1800 x 400mm	782	2669	450W	A, A+, D, E, F, G	89.0117	161.00	**198.03**
1800 x 500mm	938	3201	450W	A, A+, D, E, F, G	89.0122	182.00	**223.86**
1800 x 600mm	1088	3713	600W	A, A+, D, E, F, G	89.0127	184.00	**226.32**

Tube Diameter
22mm

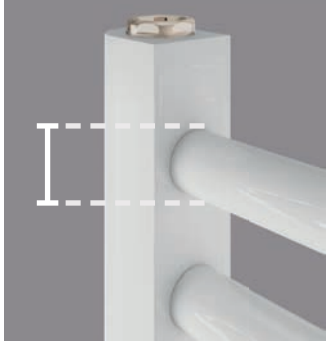

Room Divider Bracket Sets
Page 739



Vent Caps
Page 741



Multi-Rail Hangers
Page 738



Robe Hooks & Hangers
Page 738



TECHNICAL INFORMATION

All measurements in Height by Width. Heat output based on ▲T60˚C. Radiators that are electric only are restricted to the heat output of the elements. Element size can be increased to full capacity of rail if using element type D, E, F or G. For element types see pages 718-729. For matching valves see pages 731-737. For indirect heating systems only. Tappings are approx. 44mm less than the width of the rail and approx. 65mm off the wall. Price includes radiator and wall fixing sets, valves extra.

1000mm High



1200mm High



1400mm High



1600mm High



1800mm High



Multirail Range

WINGRAVE - STRAIGHT, MATT WHITE



Pictured 89.0066 Matt White





Pictured 89.1441 Matt White

A contemporary straight towel radiator range which comes in chrome, matt anthracite, matt cobalt blue, matt black, matt grey, gloss white and matt white finishes. With a wide variety of sizes, this range not only adds to your bathroom with design simplicity but also keeps your towels warm.

FEATURES
- 22mm diameter horizontal round tubes
- Wide range of sizes to fit in all spaces
- Horizontal sizes to fit under windows
- Tested to BS EN 442 standards
- 5 Year manufacturer's warranty*
- Can be single or dual fuel, or all electric

* With conditions

Technical Tables & Drawings
Page 742-743

Warranty 5 Year | Diameter (Ø) 22 MM Bars | Heating | All Electric | Dual-Fuel

600mm High



800mm High



Multirail Range

WINGRAVE - STRAIGHT, MATT WHITE

Wingrave - Straight Matt White 600mm Height

Size H x W	Watts	BTU	Element Output	Element Type	Code	€ Ex VAT	€ Inc VAT
600 x 300mm	204	697	100W	A, A+, D, E, F, G	89.0656	82.00	**100.86**
600 x 400mm	257	877	150W	A, A+, D, E, F, G	89.0657	84.00	**103.32**
600 x 500mm	309	1055	150W	A, A+, D, E, F, G	89.0658	91.00	**111.93**
600 x 600mm	358	1222	150W	A, A+, D, E, F, G	89.0659	96.00	**111.93**
600 x 1000mm	543	1853	300W	A, A+, D, F, G	89.1441	167.00	**205.41**
600 x 1200mm	629	2147	300W	A, A+, D, F, G	89.1442	182.00	**223.86**

Wingrave - Straight Matt White 800mm Height

Size H x W	Watts	BTU	Element Output	Element Type	Code	€ Ex VAT	€ Inc VAT
800 x 300mm	266	908	150W	A, A+, D, E, F, G	89.0660	84.00	**103.32**
800 x 400mm	337	1150	150W	A, A+, D, E, F, G	89.0053	98.00	**120.54**
800 x 500mm	404	1379	150W	A, A+, D, E, F, G	89.0058	107.00	**131.61**
800 x 600mm	468	1597	300W	A, A+, D, E, F, G	89.0063	112.00	**137.76**

Wingrave - Straight Matt White 1000mm Height

Size H x W	Watts	BTU	Element Output	Element Type	Code	€ Ex VAT	€ Inc VAT
1000 x 300mm	331	1130	150W	A, A+, D, E, F, G	89.0661	96.00	**118.08**
1000 x 400mm	419	1430	150W	A, A+, D, E, F, G	89.0054	112.00	**137.76**
1000 x 500mm	502	1713	300W	A, A+, D, E, F, G	89.0059	119.00	**146.37**
1000 x 600mm	582	1986	300W	A, A+, D, E, F, G	89.0064	129.00	**158.67**

Wingrave - Straight Matt White 1200mm Height

Size H x W	Watts	BTU	Element Output	Element Type	Code	€ Ex VAT	€ Inc VAT
1200 x 300mm	398	1358	150W	A, A+, D, E, F, G	89.0662	111.00	**136.53**
1200 x 400mm	503	1717	300W	A, A+, D, E, F, G	89.0055	129.00	**158.67**
1200 x 500mm	604	2061	300W	A, A+, D, E, F, G	89.0060	135.00	**166.05**
1200 x 600mm	700	2389	300W	A, A+, D, E, F, G	89.0065	145.00	**178.35**

Wingrave - Straight Matt White 1400mm Height

Size H x W	Watts	BTU	Element Output	Element Type	Code	€ Ex VAT	€ Inc VAT
1400 x 300mm	468	1597	150W	A, A+, D, E, F, G	89.0663	128.00	**157.44**
1400 x 400mm	592	2020	300W	A, A+, D, E, F, G	89.0539	145.00	**178.35**
1400 x 500mm	710	2423	300W	A, A+, D, E, F, G	89.0540	157.00	**193.11**
1400 x 600mm	824	2812	450W	A, A+, D, E, F, G	89.0541	168.00	**206.64**

Wingrave - Straight Matt White 1600mm Height

Size H x W	Watts	BTU	Element Output	Element Type	Code	€ Ex VAT	€ Inc VAT
1600 x 300mm	542	1850	300W	A, A+, D, E, F, G	89.0664	133.00	**163.59**
1600 x 400mm	685	2338	300W	A, A+, D, E, F, G	89.0056	159.00	**195.57**
1600 x 500mm	821	2802	450W	A, A+, D, E, F, G	89.0061	170.00	**209.10**
1600 x 600mm	953	3252	450W	A, A+, D, E, F, G	89.0066	180.00	**221.40**

Wingrave - Straight Matt White 1800mm Height

Size H x W	Watts	BTU	Element Output	Element Type	Code	€ Ex VAT	€ Inc VAT
1800 x 300mm	619	2113	300W	A, A+, D, E, F, G	89.0665	149.00	**183.27**
1800 x 400mm	782	2669	450W	A, A+, D, E, F, G	89.0057	173.00	**212.79**
1800 x 500mm	938	3201	450W	A, A+, D, E, F, G	89.0062	203.00	**249.69**
1800 x 600mm	1088	3713	600W	A, A+, D, E, F, G	89.0067	205.00	**252.15**

Tube Diameter
22mm

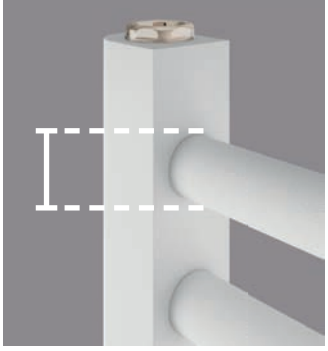

Room Divider Bracket Sets
Page 739



Vent Caps
Page 741



Multi-Rail Hangers
Page 738



Robe Hooks & Hangers
Page 738



TECHNICAL INFORMATION

All measurements in Height by Width. Heat output based on ▲T60˚C. Radiators that are electric only are restricted to the heat output of the elements. Element size can be increased to full capacity of rail if using element type D, E, F or G. For element types see pages 718-729. For matching valves see pages 731-737. For indirect heating systems only. Tappings are approx. 44mm less than the width of the rail and approx. 65mm off the wall. Price includes radiator and wall fixing sets, valves extra.

1000mm High



1200mm High



1400mm High



1600mm High



1800mm High



Multirail Range

WINGRAVE - CURVED CHROME



Pictured 89.0392 Chrome

A high quality contemporary range available in a curved design and chrome finish. Available with robe hook accessories. This range is the ultimate in simplicity of style and practicality for your bathroom, keeping your towels warm.

FEATURES
- 22mm diameter horizontal round tubes
- Tested to BS EN 442 standards
- 5 Year manufacturer's warranty*
- Can be single or dual fuel, or all electric

* With conditions

Technical Tables & Drawings
Page 742-743

Warranty 5 Year

Diameter (Ø) 22 MM Bars

Heating

All Electric

Dual-Fuel

Multirail Range

WINGRAVE - CURVED CHROME

Wingrave - Curved Chrome 800mm Height

Size H x W	Watts	BTU	Element Output	Element Type	Code	€ Ex VAT	€ Inc VAT
800 x 400mm	217	741	150W	A, A+, D, E, F, G	89.0384	142.00	**174.66**
800 x 500mm	261	891	150W	A, A+, D, E, F, G	89.0385	166.00	**204.18**
800 x 600mm	303	1034	150W	A, A+, D, E, F, G	89.0386	175.00	**215.25**

Wingrave - Curved Chrome 1000mm Height

Size H x W	Watts	BTU	Element Output	Element Type	Code	€ Ex VAT	€ Inc VAT
1000 x 400mm	269	918	150W	A, A+, D, E, F, G	89.0387	170.00	**209.10**
1000 x 500mm	324	1106	150W	A, A+, D, E, F, G	89.0388	185.00	**227.55**
1000 x 600mm	376	1283	150W	A, A+, D, E, F, G	89.0389	206.00	**253.38**

Wingrave - Curved Chrome 1200mm Height

Size H x W	Watts	BTU	Element Output	Element Type	Code	€ Ex VAT	€ Inc VAT
1200 x 400mm	324	1106	150W	A, A+, D, E, F, G	89.0390	198.00	**243.54**
1200 x 500mm	390	1331	150W	A, A+, D, E, F, G	89.0391	219.00	**269.37**
1200 x 600mm	454	1550	300W	A, A+, D, E, F, G	89.0392	243.00	**298.89**

Wingrave - Curved Chrome 1600mm Height

Size H x W	Watts	BTU	Element Output	Element Type	Code	€ Ex VAT	€ Inc VAT
1600 x 400mm	446	1522	150W	A, A+, D, E, F, G	89.0393	258.00	**317.34**
1600 x 500mm	537	1833	300W	A, A+, D, E, F, G	89.0394	283.00	**348.09**
1600 x 600mm	624	2130	300W	A, A+, D, E, F, G	89.0395	308.00	**378.84**

Wingrave - Curved Chrome 1800mm Height

Size H x W	Watts	BTU	Element Output	Element Type	Code	€ Ex VAT	€ Inc VAT
1800 x 400mm	514	1754	300W	A, A+, D, E, F, G	89.0396	289.00	**355.47**
1800 x 500mm	618	2109	300W	A, A+, D, E, F, G	89.0397	320.00	**393.60**
1800 x 600mm	719	2454	450W	A, A+, D, E, F, G	89.0398	343.00	**421.89**

D Shape Vent Caps
Page 741



Robe Hooks
Page 738



Radiator Valves
Page 731-737



TECHNICAL INFORMATION

All measurements in Height by Width. Heat output based on ▲T60˚C. Radiators that are electric only are restricted to the heat output of the elements. Element size can be increased to full capacity of rail if using element type D, E, F or G. For element types see pages 718-729. For matching valves see pages 731-737. For indirect heating systems only. Tappings are approx. 44mm less than the width of the rail and approx. 65mm off the wall. Price includes radiator and wall fixing sets, valves extra.

800mm High



1000mm High



1200mm High



1600mm High



1800mm High



Multirail Range

WINGRAVE - CURVED GLOSS WHITE



Pictured 89.0704 Gloss White

A high quality contemporary range available in a curved gloss white finish. Available with robe hook accessories. This range is the ultimate in simplicity of style and practicality for your bathroom, keeping your towels warm.

FEATURES
- 22mm diameter horizontal round tubes
- Tested to BS EN 442 standards
- 5 Year manufacturer's warranty*
- Can be single or dual fuel, or all electric

* With conditions

Technical Tables & Drawings
Page 742-743

Warranty 5 Year | Diameter (Ø) 22 MM Bars | Heating | All Electric | Dual-Fuel

Multirail Range

WINGRAVE - CURVED GLOSS WHITE

Wingrave - Curved Gloss White 800mm Height

Size H x W	Watts	BTU	Element Output	Element Type	Code	€ Ex VAT	€ Inc VAT
800 x 400mm	337	1150	150W	A, A+, D, E, F, G	89.0696	96.00	**118.08**
800 x 500mm	404	1379	150W	A, A+, D, E, F, G	89.0697	104.00	**127.92**
800 x 600mm	468	1597	300W	A, A+, D, E, F, G	89.0698	111.00	**136.53**

Wingrave - Curved Gloss White 1000mm Height

Size H x W	Watts	BTU	Element Output	Element Type	Code	€ Ex VAT	€ Inc VAT
1000 x 400mm	419	1430	150W	A, A+, D, E, F, G	89.0699	111.00	**136.53**
1000 x 500mm	502	1713	300W	A, A+, D, E, F, G	89.0700	118.00	**145.14**
1000 x 600mm	582	1986	300W	A, A+, D, E, F, G	89.0701	122.00	**150.06**

Wingrave - Curved Gloss White 1200mm Height

Size H x W	Watts	BTU	Element Output	Element Type	Code	€ Ex VAT	€ Inc VAT
1200 x 400mm	503	1717	300W	A, A+, D, E, F, G	89.0702	122.00	**150.06**
1200 x 500mm	604	2061	300W	A, A+, D, E, F, G	89.0703	131.00	**161.13**
1200 x 600mm	700	2389	300W	A, A+, D, E, F, G	89.0704	138.00	**169.74**

Wingrave - Curved Gloss White 1600mm Height

Size H x W	Watts	BTU	Element Output	Element Type	Code	€ Ex VAT	€ Inc VAT
1600 x 400mm	685	2338	300W	A, A+, D, E, F, G	89.0705	150.00	**184.50**
1600 x 500mm	821	2802	450W	A, A+, D, E, F, G	89.0706	167.00	**205.41**
1600 x 600mm	953	3252	450W	A, A+, D, E, F, G	89.0707	175.00	**215.25**

Wingrave - Curved Gloss White 1800mm Height

Size H x W	Watts	BTU	Element Output	Element Type	Code	€ Ex VAT	€ Inc VAT
1800 x 400mm	782	2669	450W	A, A+, D, E, F, G	89.0708	170.00	**209.10**
1800 x 500mm	938	3201	450W	A, A+, D, E, F, G	89.0709	192.00	**236.16**
1800 x 600mm	1088	3713	600W	A, A+, D, E, F, G	89.0710	195.00	**239.85**

D Shape Vent Caps
Page 741



Robe Hooks
Page 738



Radiator Valves
Page 731-737



TECHNICAL INFORMATION

All measurements in Height by Width. Heat output based on ▲T60˚C. Radiators that are electric only are restricted to the heat output of the elements. Element size can be increased to full capacity of rail if using element type D, E, F or G. For element types see pages 718-729. For matching valves see pages 731-737. For indirect heating systems only. Tappings are approx. 44mm less than the width of the rail and approx. 65mm off the wall. Price includes radiator and wall fixing sets, valves extra.

800mm High



1000mm High



1200mm High



1600mm High



1800mm High



Multirail Range

WENDOVER - STRAIGHT, CHROME



Pictured 41.0245 Chrome

Technical Tables & Drawings
Page 744-745

A modern ladder towel rail, available in a vast array of sizes including 600mm high by 1200mm wide, as pictured above, which is ideal for under-window situation. The Wendover range is available in chrome, brushed brass, gloss white and matt anthracite, along with matching radiator valves and pipe shrouds.

Warranty 5 Year | Diameter (Ø) 22 MM Bars | Heating | All Electric | Dual-Fuel

Wendover - Straight Chrome 360mm Height

Size H x W	Watts	BTU	Element Output	Element Type	Code	€ Ex VAT	€ Inc VAT
360 x 400mm	112	347	N/A	N/A	41.0267	98.00	**120.54**

Wendover - Straight Chrome 600mm Height

Size H x W	Watts	BTU	Element Output	Element Type	Code	€ Ex VAT	€ Inc VAT
600 x 300mm	155	529	100W	A, A+, D, E, F, G	41.0085	122.00	**150.06**
600 x 400mm	190	648	100W	A, A+, D, E, F, G	41.0082	133.00	**163.59**
600 x 500mm	225	768	100W	A, A+, D, E, F, G	41.0083	142.00	**174.66**
600 x 600mm	260	887	150W	A, A+, D, E, F, G	41.0084	154.00	**189.42**
600 x 750mm	313	1068	150W	A, A+, D, E, F, G	41.0076	174.00	**214.02**
600 x 1000mm	401	1368	150W	A, A+, D, E, F, G	41.0244	259.00	**318.57**
600 x 1200mm	472	1610	150W	A, A+, D, E, F, G	41.0245	289.00	**355.47**

360mm High



600mm High



Multirail Range

WENDOVER - STRAIGHT, CHROME

Wendover - Straight Chrome 800mm Height

Size H x W	Watts	BTU	Element Output	Element Type	Code	€ Ex VAT	€ Inc VAT
800 x 300mm	211	720	100W	A, A+, D, E, F, G	41.0086	149.00	**183.27**
800 x 400mm	260	887	150W	A, A+, D, E, F, G	41.0001	159.00	**195.57**
800 x 500mm	309	1054	150W	A, A+, D, E, F, G	41.0003	170.00	**209.10**
800 x 600mm	359	1225	150W	A, A+, D, E, F, G	41.0005	181.00	**222.63**
800 x 750mm	433	1477	150W	A, A+, D, E, F, G	41.0077	222.00	**273.06**

Wendover - Straight Chrome 1000mm Height

Size H x W	Watts	BTU	Element Output	Element Type	Code	€ Ex VAT	€ Inc VAT
1000 x 300mm	251	856	150W	A, A+, D, E, F, G	41.0087	173.00	**212.79**
1000 x 400mm	308	1051	150W	A, A+, D, E, F, G	41.0007	181.00	**222.63**
1000 x 500mm	364	1242	150W	A, A+, D, E, F, G	41.0009	195.00	**239.85**
1000 x 600mm	421	1436	150W	A, A+, D, E, F, G	41.0011	208.00	**255.84**
1000 x 750mm	506	1726	300W	A, A+, D, E, F, G	41.0078	254.00	**312.42**

Wendover - Straight Chrome 1200mm Height

Size H x W	Watts	BTU	Element Output	Element Type	Code	€ Ex VAT	€ Inc VAT
1200 x 300mm	308	1051	150W	A, A+, D, E, F, G	41.0088	203.00	**249.69**
1200 x 400mm	379	1293	150W	A, A+, D, E, F, G	41.0013	208.00	**255.84**
1200 x 500mm	450	1535	150W	A, A+, D, E, F, G	41.0015	224.00	**275.52**
1200 x 600mm	554	1890	300W	A, A+, D, E, F, G	41.0017	247.00	**303.81**
1200 x 750mm	626	2136	300W	A, A+, D, E, F, G	41.0079	304.00	**373.92**

Wendover - Straight Chrome 1600mm Height

Size H x W	Watts	BTU	Element Output	Element Type	Code	€ Ex VAT	€ Inc VAT
1600 x 300mm	406	1385	150W	A, A+, D, E, F, G	41.0089	250.00	**307.50**
1600 x 400mm	497	1696	300W	A, A+, D, E, F, G	41.0019	259.00	**318.57**
1600 x 500mm	589	2010	300W	A, A+, D, E, F, G	41.0021	283.00	**348.09**
1600 x 600mm	681	2324	300W	A, A+, D, E, F, G	41.0023	308.00	**378.84**
1600 x 750mm	819	2794	450W	A, A+, D, E, F, G	41.0080	383.00	**471.09**

Wendover - Straight Chrome 1800mm Height

Size H x W	Watts	BTU	Element Output	Element Type	Code	€ Ex VAT	€ Inc VAT
1800 x 300mm	462	1576	150W	A, A+, D, E, F, G	41.0090	276.00	**339.48**
1800 x 400mm	568	1938	300W	A, A+, D, E, F, G	41.0025	289.00	**355.47**
1800 x 500mm	675	2303	300W	A, A+, D, E, F, G	41.0027	320.00	**393.60**
1800 x 600mm	780	2661	450W	A, A+, D, E, F, G	41.0029	345.00	**424.35**
1800 x 750mm	940	3207	450W	A, A+, D, E, F, G	41.0081	427.00	**525.21**

Room Divider Bracket Sets
Page 739



Round Vent Caps
Page 741

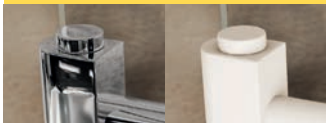

Robe Hooks
Page 738



Towel Hangers
Page 738



Multi-Rail Hangers
Page 738



TECHNICAL INFORMATION

All measurements in Height by Width. Heat output based on ▲T60˚C. Radiators that are electric only are restricted to the heat output of the elements. Element size can be increased to full capacity of rail if using element type D, E, F or G. For element types see pages 718-729. For matching valves see pages 731-737. For indirect heating systems only. Tappings are approx. 50mm less than the width of the rail and approx. 70mm off the wall. Price includes radiator and wall fixing sets, valves extra.

800mm High



1000mm High



1200mm High



1600mm High



1800mm High



Multirail Range

WENDOVER - CURVED, CHROME



Pictured 41.0035 Chrome

Technical Tables & Drawings
Page 744-745

A modern ladder towel rail, with a range of sizes available, from 600 x 400mm to 1800 x 750mm. Available in straight and curved options as well as chrome, gloss white and matt anthracite finishes.

FEATURES
- 22mm diameter horizontal round tubes
- Tested to BS EN 442 standards
- 5 Year manufacturer's warranty*
- Can be single or dual fuel, or all electric

* With conditions

Warranty 5 Year | Diameter (Ø) 22 MM Bars | Heating | All Electric | Dual-Fuel

600mm High



800mm High



Multirail Range

WENDOVER - CURVED, CHROME

Wendover - Curved Chrome 600mm Height

Size H x W	Watts	BTU	Element Output	Element Type	Code	€ Ex VAT	€ Inc VAT
600 x 400mm	190	648	100W	A, A+, D, E, F, G	41.0106	135.00	**166.05**
600 x 500mm	225	768	100W	A, A+, D, E, F, G	41.0107	145.00	**178.35**
600 x 600mm	260	887	150W	A, A+, D, E, F, G	41.0108	159.00	**195.57**
600 x 750mm	313	1068	150W	A, A+, D, E, F, G	41.0100	181.00	**222.63**

Wendover - Curved Chrome 800mm Height

Size H x W	Watts	BTU	Element Output	Element Type	Code	€ Ex VAT	€ Inc VAT
800 x 400mm	263	897	150W	A, A+, D, E, F, G	41.0031	166.00	**204.18**
800 x 500mm	312	1065	150W	A, A+, D, E, F, G	41.0033	173.00	**212.79**
800 x 600mm	361	1232	150W	A, A+, D, E, F, G	41.0035	185.00	**227.55**
800 x 750mm	433	1477	150W	A, A+, D, E, F, G	41.0101	231.00	**284.13**

Wendover - Curved Chrome 1000mm Height

Size H x W	Watts	BTU	Element Output	Element Type	Code	€ Ex VAT	€ Inc VAT
1000 x 400mm	310	1058	150W	A, A+, D, E, F, G	41.0037	182.00	**223.86**
1000 x 500mm	367	1252	150W	A, A+, D, E, F, G	41.0039	199.00	**244.77**
1000 x 600mm	423	1443	150W	A, A+, D, E, F, G	41.0041	210.00	**258.30**
1000 x 750mm	506	1726	300W	A, A+, D, E, F, G	41.0102	259.00	**318.57**

Wendover - Curved Chrome 1200mm Height

Size H x W	Watts	BTU	Element Output	Element Type	Code	€ Ex VAT	€ Inc VAT
1200 x 400mm	382	1303	150W	A, A+, D, E, F, G	41.0043	210.00	**258.30**
1200 x 500mm	452	1542	150W	A, A+, D, E, F, G	41.0045	236.00	**290.28**
1200 x 600mm	523	1784	300W	A, A+, D, E, F, G	41.0047	252.00	**309.96**
1200 x 750mm	626	2136	300W	A, A+, D, E, F, G	41.0103	311.00	**382.53**

Wendover - Curved Chrome 1600mm Height

Size H x W	Watts	BTU	Element Output	Element Type	Code	€ Ex VAT	€ Inc VAT
1600 x 400mm	501	1709	300W	A, A+, D, E, F, G	41.0049	271.00	**333.33**
1600 x 500mm	593	2023	300W	A, A+, D, E, F, G	41.0051	296.00	**364.08**
1600 x 600mm	685	2337	300W	A, A+, D, E, F, G	41.0053	318.00	**391.14**
1600 x 750mm	819	2794	450W	A, A+, D, E, F, G	41.0104	394.00	**484.62**

Wendover - Curved Chrome 1800mm Height

Size H x W	Watts	BTU	Element Output	Element Type	Code	€ Ex VAT	€ Inc VAT
1800 x 400mm	573	1955	300W	A, A+, D, E, F, G	41.0055	304.00	**373.92**
1800 x 500mm	678	2313	300W	A, A+, D, E, F, G	41.0057	329.00	**404.67**
1800 x 600mm	784	2675	450W	A, A+, D, E, F, G	41.0059	355.00	**436.65**
1800 x 750mm	940	3207	450W	A, A+, D, E, F, G	41.0105	443.00	**544.89**

Round Vent Caps
Page 741

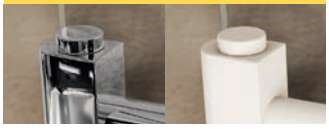

Robe Hooks
Page 738



Radiator Valves
Page 731-737



TECHNICAL INFORMATION

All measurements in Height by Width. Heat output based on ▲T60˚C. Radiators that are electric only are restricted to the heat output of the elements. Element size can be increased to full capacity of rail if using element type D, E, F or G. For element types see pages 718-729. For matching valves see pages 731-737. For indirect heating systems only. Tappings are approx. 50mm less than the width of the rail and approx. 70mm off the wall. Price includes radiator and wall fixing sets, valves extra.

1000mm High



1200mm High



1600mm High



1800mm High



Multirail Range

WENDOVER - STRAIGHT, GLOSS WHITE



Pictured 41.0028 Gloss White

A modern ladder towel rail, with a range of sizes available including 360 x 400mm to 1800 x 750mm. Available in straight and curved options as well as chrome, gloss white and matt anthracite finishes.

FEATURES
- 22mm diameter horizontal round tubes
- Tested to BS EN 442 standards
- 5 Year manufacturer's warranty*
- Can be single or dual fuel, or all electric

* With conditions

Technical Tables & Drawings
Page 744-745

Wendover - Straight Gloss White 360mm Height

Size H x W	Watts	BTU	Element Output	Element Type	Code	€ Ex VAT	€ Inc VAT
360 x 400mm	112	423	N/A	N/A	41.0266	62.00	**76.26**

Wendover - Straight Gloss White 600mm Height

Size H x W	Watts	BTU	Element Output	Element Type	Code	€ Ex VAT	€ Inc VAT
600 x 300mm	196	669	100W	A, A+, D, E, F, G	41.0070	75.00	**92.25**
600 x 400mm	241	822	150W	A, A+, D, E, F, G	41.0067	83.00	**102.09**
600 x 500mm	285	972	150W	A, A+, D, E, F, G	41.0068	86.00	**105.78**
600 x 600mm	330	1126	150W	A, A+, D, E, F, G	41.0069	91.00	**111.93**
600 x 750mm	397	1355	150W	A, A+, D, E, F, G	41.0061	105.00	**129.15**
600 x 1000mm	510	1740	300W	A, A+, D, E, F, G	41.0246	154.00	**189.42**
600 x 1200mm	600	2047	300W	A, A+, D, E, F, G	41.0247	167.00	**205.41**

Wendover - Straight Gloss White 800mm Height

Size H x W	Watts	BTU	Element Output	Element Type	Code	€ Ex VAT	€ Inc VAT
800 x 300mm	267	911	150W	A, A+, D, E, F, G	41.0071	87.00	**107.01**
800 x 400mm	330	1126	150W	A, A+, D, E, F, G	41.0002	93.00	**114.39**
800 x 500mm	394	1344	150W	A, A+, D, E, F, G	41.0004	98.00	**120.54**
800 x 600mm	457	1559	150W	A, A+, D, E, F, G	41.0006	105.00	**129.15**
800 x 750mm	551	1880	300W	A, A+, D, E, F, G	41.0062	128.00	**157.44**

Wendover - Straight Gloss White 1000mm Height

Size H x W	Watts	BTU	Element Output	Element Type	Code	€ Ex VAT	€ Inc VAT
1000 x 300mm	320	1092	150W	A, A+, D, E, F, G	41.0072	104.00	**127.92**
1000 x 400mm	392	1338	150W	A, A+, D, E, F, G	41.0008	105.00	**129.15**
1000 x 500mm	464	1583	150W	A, A+, D, E, F, G	41.0010	112.00	**137.76**
1000 x 600mm	535	1825	300W	A, A+, D, E, F, G	41.0012	119.00	**146.37**
1000 x 750mm	643	2194	300W	A, A+, D, E, F, G	41.0063	142.00	**174.66**

Wendover - Straight Gloss White 1200mm Height

Size H x W	Watts	BTU	Element Output	Element Type	Code	€ Ex VAT	€ Inc VAT
1200 x 300mm	392	1338	150W	A, A+, D, E, F, G	41.0073	117.00	**143.91**
1200 x 400mm	482	1645	300W	A, A+, D, E, F, G	41.0014	119.00	**146.37**
1200 x 500mm	571	1948	300W	A, A+, D, E, F, G	41.0016	128.00	**157.44**
1200 x 600mm	661	2255	300W	A, A+, D, E, F, G	41.0018	135.00	**166.05**
1200 x 750mm	796	2716	450W	A, A+, D, E, F, G	41.0064	168.00	**206.64**

Wendover - Straight Gloss White 1600mm Height

Size H x W	Watts	BTU	Element Output	Element Type	Code	€ Ex VAT	€ Inc VAT
1600 x 300mm	516	1761	300W	A, A+, D, E, F, G	41.0074	136.00	**167.28**
1600 x 400mm	632	2156	300W	A, A+, D, E, F, G	41.0020	145.00	**178.35**
1600 x 500mm	749	2556	450W	A, A+, D, E, F, G	41.0022	159.00	**195.57**
1600 x 600mm	867	2958	450W	A, A+, D, E, F, G	41.0024	170.00	**209.10**
1600 x 750mm	1041	3552	600W	A, A+, D, E, F, G	41.0065	206.00	**253.38**

Wendover - Straight Gloss White 1800mm Height

Size H x W	Watts	BTU	Element Output	Element Type	Code	€ Ex VAT	€ Inc VAT
1800 x 300mm	588	2006	300W	A, A+, D, E, F, G	41.0075	154.00	**189.42**
1800 x 400mm	723	2467	300W	A, A+, D, E, F, G	41.0026	166.00	**204.18**
1800 x 500mm	856	2921	450W	A, A+, D, E, F, G	41.0028	174.00	**214.02**
1800 x 600mm	991	3381	600W	A, A+, D, E, F, G	41.0030	188.00	**231.24**
1800 x 750mm	1193	4071	600W	A, A+, D, E, F, G	41.0066	234.00	**287.82**

Round Vent Caps
Page 741



Robe Hooks
Page 738



Room Divider Bracket Sets
Page 739



Multi-Rail Hangers
Page 738



Warranty 5 Year | Diameter (Ø) 22 MM Bars | Heating | All Electric | Dual-Fuel

Multirail Range



Pictured 41.0036 Gloss White

A modern ladder towel rail, with a range of sizes available including 600 x 400mm to 1800 x 750mm. Available in straight and curved options as well as chrome, gloss white and matt anthracite finishes.

FEATURES
- 22mm diameter horizontal round tubes
- Tested to BS EN 442 standards
- 5 Year manufacturer's warranty*
- Can be single or dual fuel, or all electric

* With conditions

Technical Tables & Drawings
Page 744-745

WENDOVER - CURVED, GLOSS WHITE

Wendover - Curved Gloss White 600mm Height

Size H x W	Watts	BTU	Element Output	Element Type	Code	€ Ex VAT	€ Inc VAT
600 x 400mm	241	822	150W	A, A+, D, E, F, G	41.0097	84.00	**103.32**
600 x 500mm	285	972	150W	A, A+, D, E, F, G	41.0098	87.00	**107.01**
600 x 600mm	330	1126	150W	A, A+, D, E, F, G	41.0099	93.00	**114.39**
600 x 750mm	397	1355	150W	A, A+, D, E, F, G	41.0091	107.00	**131.61**

Wendover - Curved Gloss White 800mm Height

Size H x W	Watts	BTU	Element Output	Element Type	Code	€ Ex VAT	€ Inc VAT
800 x 400mm	333	1136	150W	A, A+, D, E, F, G	41.0032	97.00	**119.31**
800 x 500mm	396	1351	150W	A, A+, D, E, F, G	41.0034	104.00	**127.92**
800 x 600mm	459	1566	150W	A, A+, D, E, F, G	41.0036	111.00	**136.53**
800 x 750mm	551	1880	300W	A, A+, D, E, F, G	41.0092	129.00	**158.67**

Wendover - Curved Gloss White 1000mm Height

Size H x W	Watts	BTU	Element Output	Element Type	Code	€ Ex VAT	€ Inc VAT
1000 x 400mm	395	1348	150W	A, A+, D, E, F, G	41.0038	107.00	**131.61**
1000 x 500mm	467	1593	150W	A, A+, D, E, F, G	41.0040	117.00	**143.91**
1000 x 600mm	539	1839	300W	A, A+, D, E, F, G	41.0042	121.00	**148.83**
1000 x 750mm	643	2194	300W	A, A+, D, E, F, G	41.0093	145.00	**178.35**

Wendover - Curved Gloss White 1200mm Height

Size H x W	Watts	BTU	Element Output	Element Type	Code	€ Ex VAT	€ Inc VAT
1200 x 400mm	486	1658	300W	A, A+, D, E, F, G	41.0044	121.00	**148.83**
1200 x 500mm	575	1962	300W	A, A+, D, E, F, G	41.0046	131.00	**161.13**
1200 x 600mm	665	2269	300W	A, A+, D, E, F, G	41.0048	138.00	**169.74**
1200 x 750mm	796	2716	450W	A, A+, D, E, F, G	41.0094	173.00	**212.79**

Wendover - Curved Gloss White 1600mm Height

Size H x W	Watts	BTU	Element Output	Element Type	Code	€ Ex VAT	€ Inc VAT
1600 x 400mm	637	2173	300W	A, A+, D, E, F, G	41.0050	149.00	**183.27**
1600 x 500mm	754	2573	450W	A, A+, D, E, F, G	41.0052	166.00	**204.18**
1600 x 600mm	870	2968	450W	A, A+, D, E, F, G	41.0054	174.00	**214.02**
1600 x 750mm	1041	3552	600W	A, A+, D, E, F, G	41.0095	210.00	**258.30**

Wendover - Curved Gloss White 1800mm Height

Size H x W	Watts	BTU	Element Output	Element Type	Code	€ Ex VAT	€ Inc VAT
1800 x 400mm	728	2484	300W	A, A+, D, E, F, G	41.0056	167.00	**205.41**
1800 x 500mm	863	2945	450W	A, A+, D, E, F, G	41.0058	181.00	**222.63**
1800 x 600mm	998	3405	600W	A, A+, D, E, F, G	41.0060	195.00	**239.85**
1800 x 750mm	1193	4071	600W	A, A+, D, E, F, G	41.0096	237.00	**291.51**

Radiator Valves
Page 731-737



TECHNICAL INFORMATION

All measurements in Height by Width. Heat output based on ▲T60˚C. Radiators that are electric only are restricted to the heat output of the elements. Element size can be increased to full capacity of rail if using element type D, E, F or G. For element types see pages 718-729. For matching valves see pages 731-737. For indirect heating systems only. Tappings are approx. 50mm less than the width of the rail and approx. 70mm off the wall. Price includes radiator and wall fixing sets, valves extra.

Warranty 5 Year | Diameter (Ø) 22 MM Bars | Heating | All Electric | Dual-Fuel

Round Vent Caps
Page 741

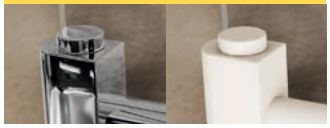

Robe Hooks
Page 738



Multirail Range

WENDOVER - STRAIGHT MATT ANTHRACITE



Pictured 41.0326 Matt Anthracite

A modern ladder towel rail in a stunning matt anthracite finish. This rail will add a touch of class to finish off your bathroom.

FEATURES
- 22mm diameter horizontal round tubes
- Tested to BS EN 442 standards
- 5 Year manufacturer's warranty*
- Can be single or dual fuel, or all electric

* With conditions

Technical Tables & Drawings
Page 744-745

Wendover - Straight Matt Anthracite

Size H x W	Watts	BTU	Element Output	Element Type	Code	€ Ex VAT	€ Inc VAT
600 x 400mm	241	822	150W	A, A+, D, E, F, G	41.0320	86.00	**105.78**
600 x 500mm	285	972	150W	A, A+, D, E, F, G	41.0321	91.00	**111.93**
600 x 600mm	330	1126	150W	A, A+, D, E, F, G	41.0322	97.00	**119.31**
1200 x 400mm	482	1645	300W	A, A+, D, E, F, G	41.0323	128.00	**157.44**
1200 x 500mm	571	1948	300W	A, A+, D, E, F, G	41.0324	133.00	**163.59**
1200 x 600mm	661	2255	300W	A, A+, D, E, F, G	41.0325	142.00	**174.66**
1800 x 500mm	856	2921	450W	A, A+, D, E, F, G	41.0326	185.00	**227.55**
1800 x 600mm	991	3381	600W	A, A+, D, E, F, G	41.0327	199.00	**244.77**

1200mm High



600mm High



1800mm High

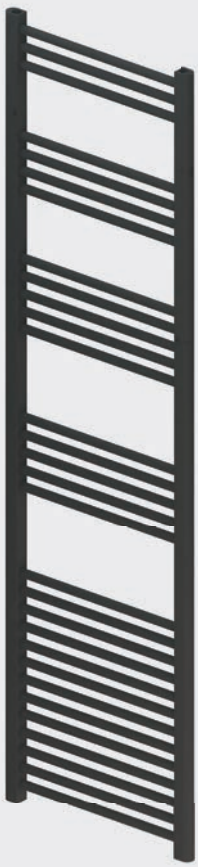

TECHNICAL INFORMATION

All measurements in Height by Width. Heat output based on ▲T60˚C. Radiators that are electric only are restricted to the heat output of the elements. Element size can be increased to full capacity of rail if using element type D, E, F or G. For element types see pages 718-729. For matching valves see pages 731-737. For indirect heating systems only. Tappings are approx. 50mm less than the width of the rail and approx. 70mm off the wall. Price includes radiator and wall fixing sets, valves extra.

Round Vent Caps
Page 741



Robe Hooks
Page 738



Room Divider Bracket Sets
Page 739



Multi-Rail Hangers
Page 738



Warranty 5 Year | Diameter (Ø) 22 MM Bars | Heating | All Electric | Dual-Fuel

Multirail Range

Including new colour

WENDOVER - STRAIGHT BRUSHED BRASS

Wendover - Straight Brushed Brass							New Colour
Size H x W	Watts	BTU	Element Output	Element Type	Code	€ Ex VAT	€ Inc VAT
800 x 500mm*	309	1054	150W	A, A+, D, E, F, G	41.0361	377.00	**463.71**
800 x 600mm*	359	1225	150W	A, A+, D, E, F, G	41.0362	394.00	**484.62**
1200 x 500mm*	450	1535	150W	A, A+, D, E, F, G	41.0363	539.00	**662.97**
1200 x 600mm*	554	1890	300W	A, A+, D, E, F, G	41.0364	565.00	**694.95**
1400 x 500mm*	504	1720	150W	A, A+, D, E, F, G	41.0365	615.00	**756.45**
1400 x 600mm*	582	1986	300W	A, A+, D, E, F, G	41.0366	644.00	**792.12**
1600 x 500mm*	589	2010	300W	A, A+, D, E, F, G	41.0367	702.00	**863.46**
1600 x 600mm*	681	2324	300W	A, A+, D, E, F, G	41.0368	735.00	**904.05**
1800 x 500mm*	675	2303	300W	A, A+, D, E, F, G	41.0369	789.00	**970.47**
1800 x 600mm*	780	2661	450W	A, A+, D, E, F, G	41.0370	828.00	**1018.44**

* Available February 2023.

A modern ladder towel rail in a stunning brushed brass finish. This rail will add a touch of class to finish off your bathroom.

FEATURES

- 22mm diameter horizontal round tubes
- Rear fixing wall brackets
- Tested to BS EN 442 standards
- 5 Year manufacturer's warranty*
- Can be single or dual fuel, or all electric

* With conditions

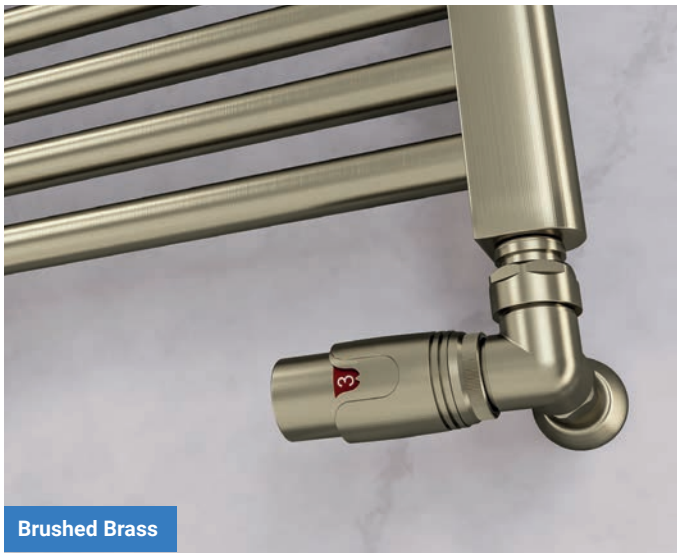

Brushed Brass

41.3037



15mm Corner TRV & Lockshield - Brushed Brass		New Colour
Code	€ Ex VAT	€ Inc VAT
41.3037	107.00	**131.61**



Rear fixing wall brackets

Brushed Brass colour shown in images are subject to the limitations of the printing process and may appear different.

Warranty 5 Year

Diameter (Ø) 22 MM Bars

Heating

All Electric

Dual-Fuel

TECHNICAL INFORMATION

All measurements in Height by Width. Heat output based on ▲T60˚C. Radiators that are electric only are restricted to the heat output of the elements. Element size can be increased to full capacity of rail if using element type D, E, F or G. For element types see pages 718-729. For matching valves see pages 731-737. For indirect heating systems only. Tappings are approx. 50mm less than the width of the rail and approx. 70mm off the wall. Price includes radiator and wall fixing sets, valves extra.

Multirail Range

BIAVA MULTIRAIL - STRAIGHT GLOSS WHITE



Pictured 41.0278 Gloss White

BIAVA MULTIRAIL - STRAIGHT CHROME



Pictured 41.0272 Chrome

Biava Multirail - Straight Gloss White

Size H x W	Watts	BTU	Element Output	Element Type	Code	€ Ex VAT	€ Inc VAT
360x400mm	145	495	100W	A, A+, D, E, F, G	41.0278	83.00	**102.09**
688x450mm	344	1174	150W	A, A+, D, E, F, G	41.0279	149.00	**183.27**
688x600mm	438	1494	150W	A, A+, D, E, F, G	41.0280	154.00	**189.42**
688x750mm	532	1815	300W	A, A+, D, E, F, G	41.0281	159.00	**195.57**
1118x450mm	546	1863	300W	A, A+, D, E, F, G	41.0282	180.00	**221.40**
1118x600mm	695	2371	300W	A, A+, D, E, F, G	41.0283	184.00	**226.32**
1118x750mm	843	2876	450W	A, A+, D, E, F, G	41.0284	199.00	**244.77**
1720x450mm	843	2876	450W	A, A+, D, E, F, G	41.0285	250.00	**307.50**
1720x600mm	1072	3658	600W	A, A+, D, E, F, G	41.0286	259.00	**318.57**
1720x750mm	1302	4442	750W	A, A+, D, E, F, G	41.0287	278.00	**341.94**

Biava Multirail - Straight Chrome

Size H x W	Watts	BTU	Element Output	Element Type	Code	€ Ex VAT	€ Inc VAT
360x400mm	113	386	N/A	N/A	41.0268	133.00	**163.59**
688x450mm	270	921	150W	A, A+, D, E, F, G	41.0269	276.00	**339.48**
688x600mm	344	1174	150W	A, A+, D, E, F, G	41.0270	308.00	**378.84**
688x750mm	418	1426	150W	A, A+, D, E, F, G	41.0271	343.00	**421.89**
1118x450mm	430	1467	150W	A, A+, D, E, F, G	41.0272	345.00	**424.35**
1118x600mm	546	1863	300W	A, A+, D, E, F, G	41.0273	377.00	**463.71**
1118x750mm	663	2262	300W	A, A+, D, E, F, G	41.0274	408.00	**501.84**
1720x450mm	663	2262	300W	A, A+, D, E, F, G	41.0275	478.00	**587.94**
1720x600mm	843	2876	450W	A, A+, D, E, F, G	41.0276	496.00	**610.08**
1720x750mm	1024	3494	600W	A, A+, D, E, F, G	41.0277	539.00	**662.97**

A high quality contemporary range available in straight and curved designs, and gloss white or chrome finishes. Available with towel hangers or robe hook accessories. This range is the ultimate in simplicity of style and practicality for your bathroom, keeping your towels warm.

FEATURES
- 22mm diameter horizontal round tubes
- Tested to BS EN 442 standards
- 5 Year manufacturer's warranty*
- Can be single or dual fuel, or all electric

* With conditions

Technical Tables & Drawings
Page 746-747

TECHNICAL INFORMATION

All measurements in Height by Width. Heat output based on ▲T60˚C. Radiators that are electric only are restricted to the heat output of the elements. Element size can be increased to full capacity of rail if using element type D, E, F or G. For element types see pages 718-729. For matching valves see pages 731-737. For indirect heating systems only. Tappings are approx. 50mm less than the width of the rail and approx. 75mm off the wall. Price includes radiator and wall fixing sets, valves extra.

Warranty 5 Year

Diameter (Ø) 22 MM Bars

Heating

All Electric

Dual-Fuel

Room Divider Bracket Sets
Page 739



Robe Hooks
Page 738



Round Vent Caps
Page 741

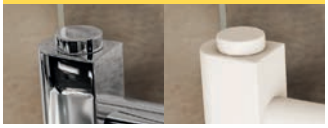

Multi-Rail Hangers
Page 738



Multirail Range

BIAVA MULTIRAIL - CURVED CHROME



Pictured 41.0296 Chrome

BIAVA MULTIRAIL - CURVED GLOSS WHITE



Pictured 41.0303 Gloss White

Biava Multirail - Curved Chrome

Size H x W	Watts	BTU	Element Output	Element Type	Code	€ Ex VAT	€ Inc VAT
360x400mm	114	389	N/A	N/A	41.0288	128.00	**157.44**
688x450mm	273	931	150W	A, A+, D, E, F, G	41.0289	306.00	**376.38**
688x600mm	347	1184	150W	A, A+, D, E, F, G	41.0290	342.00	**420.66**
688x750mm	421	1436	150W	A, A+, D, E, F, G	41.0291	377.00	**463.71**
1118x450mm	433	1477	150W	A, A+, D, E, F, G	41.0292	378.00	**464.94**
1118x600mm	549	1873	300W	A, A+, D, E, F, G	41.0293	411.00	**505.53**
1118x750mm	666	2272	300W	A, A+, D, E, F, G	41.0294	451.00	**554.73**
1720x450mm	668	2279	300W	A, A+, D, E, F, G	41.0295	538.00	**661.74**
1720x600mm	848	2893	450W	A, A+, D, E, F, G	41.0296	546.00	**671.58**
1720x750mm	1029	3511	600W	A, A+, D, E, F, G	41.0297	591.00	**726.93**

Biava Multirail - Curved Gloss White

Size H x W	Watts	BTU	Element Output	Element Type	Code	€ Ex VAT	€ Inc VAT
360x400mm	145	495	100W	A, A+, D, E, F, G	41.0298	84.00	**103.32**
688x450mm	347	1184	150W	A, A+, D, E, F, G	41.0299	170.00	**209.10**
688x600mm	440	1501	150W	A, A+, D, E, F, G	41.0300	174.00	**214.02**
688x750mm	535	1825	300W	A, A+, D, E, F, G	41.0301	175.00	**215.25**
1118x450mm	550	1877	300W	A, A+, D, E, F, G	41.0302	195.00	**239.85**
1118x600mm	699	2385	300W	A, A+, D, E, F, G	41.0303	199.00	**244.77**
1118x750mm	846	2887	450W	A, A+, D, E, F, G	41.0304	216.00	**265.68**
1720x450mm	849	2897	450W	A, A+, D, E, F, G	41.0305	278.00	**341.94**
1720x600mm	1078	3678	600W	A, A+, D, E, F, G	41.0306	286.00	**351.78**
1720x750mm	1307	4459	750W	A, A+, D, E, F, G	41.0307	307.00	**377.61**

A high quality contemporary range available in straight and curved designs, and gloss white or chrome finishes. Available with towel hangers or robe hook accessories. This range is the ultimate in simplicity of style and practicality for your bathroom, keeping your towels warm.

FEATURES

- 22mm diameter horizontal round tubes
- Tested to BS EN 442 standards
- 5 Year manufacturer's warranty*
- Can be single or dual fuel, or all electric

* With conditions

Technical Tables & Drawings
Page 746-747

Warranty 5 Year

Diameter (Ø) 22 MM Bars

Heating

All Electric

Dual-Fuel

TECHNICAL INFORMATION

All measurements in Height by Width. Heat output based on ▲T60˚C. Radiators that are electric only are restricted to the heat output of the elements. Element size can be increased to full capacity of rail if using element type D, E, F or G. For element types see pages 718-729. For matching valves see pages 731-737. For indirect heating systems only. Tappings are approx. 50mm less than the width of the rail and approx. 75mm off the wall. Price includes radiator and wall fixing sets, valves extra.

Round Vent Caps
Page 741



Robe Hooks
Page 738



Multirail Range

BIAVA MULTIRAIL HIDDEN VENT (HV), STRAIGHT

Including new colour

Pictured 61.0082 Chrome



PRICE REDUCTION

Warranty 5 Year

Diameter (Ø) 22 MM Bars

Price reduction due to new automated production facility.

Pictured 61.0088 Gloss White



Biava Multirail HV towel rail rewrites the standards with the air vent hidden at the back of the towel rail and flush finished tops.

FEATURES

- Tested to BS EN 442 standards
- Hidden air vent at the rear
- Tappings only at the bottom
- Flush finished tops
- Can be single, dual fuel or all electric
- 5 Year Manufacturer's Warranty*

* With conditions

Technical Tables & Drawings
Page 746-747

Multirail Range

Including new colour

BIAVA MULTIRAIL HIDDEN VENT (HV), STRAIGHT

Sleek, Minimalistic Tops



Rear Side Hidden Air Vent

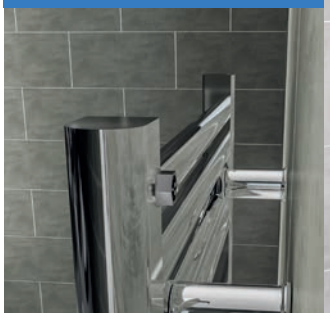

Pictured 61.0079 Chrome



Biava Multirail Hidden Vent (HV) Straight - Chrome

Size H x W	Watts	BTU	Element Output	Element Type	Code	€ Ex VAT	€ Inc VAT
360 x 400mm	113	386	N/A	N/A	61.0074	76.00	**93.48**
688 x 450mm	270	921	150W	A, A+, D, E, F, G	61.0075	114.00	**140.22**
688 x 600mm	344	1174	150W	A, A+, D, E, F, G	61.0076	129.00	**158.67**
688 x 750mm	418	1426	150W	A, A+, D, E, F, G	61.0077	145.00	**178.35**
1118 x 450mm	430	1467	150W	A, A+, D, E, F, G	61.0078	167.00	**205.41**
1118 x 600mm	546	1863	300W	A, A+, D, E, F, G	61.0079	189.00	**232.47**
1118 x 750mm	663	2262	300W	A, A+, D, E, F, G	61.0080	206.00	**253.38**
1720 x 450mm	663	2262	300W	A, A+, D, E, F, G	61.0081	223.00	**274.29**
1720 x 600mm	843	2876	450W	A, A+, D, E, F, G	61.0082	261.00	**321.03**
1720 x 750mm	1024	3494	600W	A, A+, D, E, F, G	61.0083	299.00	**367.77**

Biava Multirail Hidden Vent (HV) Straight - Gloss White

Size H x W	Watts	BTU	Element Output	Element Type	Code	€ Ex VAT	€ Inc VAT
360 x 400mm	145	495	100W	A, A+, D, E, F, G	61.0084	65.00	**79.95**
688 x 450mm	344	1174	150W	A, A+, D, E, F, G	61.0085	89.00	**109.47**
688 x 600mm	438	1494	150W	A, A+, D, E, F, G	61.0086	97.00	**119.31**
688 x 750mm	532	1815	300W	A, A+, D, E, F, G	61.0087	105.00	**129.15**
1118 x 450mm	546	1863	300W	A, A+, D, E, F, G	61.0088	115.00	**141.45**
1118 x 600mm	695	2371	300W	A, A+, D, E, F, G	61.0089	129.00	**158.67**
1118 x 750mm	843	2876	450W	A, A+, D, E, F, G	61.0090	143.00	**175.89**
1720 x 450mm	843	2876	450W	A, A+, D, E, F, G	61.0091	156.00	**191.88**
1720 x 600mm	1072	3658	600W	A, A+, D, E, F, G	61.0092	177.00	**217.71**
1720 x 750mm	1302	4442	750W	A, A+, D, E, F, G	61.0093	198.00	**243.54**

Biava Multirail Hidden Vent (HV) Straight - Matt White *New Colour*

Size H x W	Watts	BTU	Element Output	Element Type	Code	€ Ex VAT	€ Inc VAT
360 x 400mm	145	495	100W	A, A+, D, E, F, G	61.0114	65.00	**79.95**
688 x 450mm	344	1174	150W	A, A+, D, E, F, G	61.0115	89.00	**109.47**
688 x 600mm	438	1494	150W	A, A+, D, E, F, G	61.0116	97.00	**119.31**
688 x 750mm	532	1815	300W	A, A+, D, E, F, G	61.0117	105.00	**129.15**
1118 x 450mm	546	1863	300W	A, A+, D, E, F, G	61.0118	115.00	**141.45**
1118 x 600mm	695	2371	300W	A, A+, D, E, F, G	61.0119	129.00	**158.67**
1118 x 750mm	843	2876	450W	A, A+, D, E, F, G	61.0120	143.00	**175.89**
1720 x 450mm	843	2876	450W	A, A+, D, E, F, G	61.0121	156.00	**191.88**
1720 x 600mm	1072	3658	600W	A, A+, D, E, F, G	61.0122	177.00	**217.71**
1720 x 750mm	1302	4442	750W	A, A+, D, E, F, G	61.0123	198.00	**243.54**

Multi-Rail Hangers
Page 738



Towel Hangers
Page 738



Robe Hooks
Page 738



Room Divider Bracket Sets
Page 739



TECHNICAL INFORMATION

All measurements in Height by Width. Heat output based on ▲T60˚C. Radiators that are electric only are restricted to the heat output of the elements. Element size can be increased to full capacity of rail if using element type D, E, F or G. For element types see pages 718-729. For matching valves see pages 731-737. For indirect heating systems only. Tappings are approx. 50mm less than the width of the rail and approx. 70-85mm off the wall. Price includes radiator and wall fixing sets, valves extra.

360mm High



688mm High



1118mm High



1720mm High



Multirail Range

BIAVA MULTIRAIL HIDDEN VENT (HV), STRAIGHT



Pictured 61.0099 Matt Antracite

PRICE REDUCTION



Pictured 61.0112 Matt Black

Biava Multirail HV towel rail rewrites the standards with the air vent hidden at the back of the towel rail and flush finished tops.

FEATURES

- Tested to BS EN 442 standards
- Hidden air vent at the rear
- Tappings only at the bottom
- Flush finished tops
- Can be single, dual fuel or all electric
- 5 Year Manufacturer's Warranty*

* With conditions

Technical Tables & Drawings
Page 746-747

TECHNICAL INFORMATION

All measurements in Height by Width. Heat output based on ▲T60˚C. Radiators that are electric only are restricted to the heat output of the elements. Element size can be increased to full capacity of rail if using element type D, E, F or G. For element types see pages 718-729. For matching valves see pages 731-737. For indirect heating systems only. Tappings are approx. 50mm less than the width of the rail and approx. 70-85mm off the wall. Price includes radiator and wall fixing sets, valves extra.

Biava Multirail Hidden Vent (HV) Straight - Matt Anthracite

Size H x W	Watts	BTU	Element Output	Element Type	Code	€ Ex VAT	€ Inc VAT
360 x 400mm	145	495	100W	A, A+, D, E, F, G	61.0094	65.00	**79.95**
688 x 450mm	344	1174	150W	A, A+, D, E, F, G	61.0095	89.00	**109.47**
688 x 600mm	438	1494	150W	A, A+, D, E, F, G	61.0096	97.00	**119.31**
688 x 750mm	532	1815	300W	A, A+, D, E, F, G	61.0097	105.00	**129.15**
1118 x 450mm	546	1863	300W	A, A+, D, E, F, G	61.0098	115.00	**141.45**
1118 x 600mm	695	2371	300W	A, A+, D, E, F, G	61.0099	129.00	**158.67**
1118 x 750mm	843	2876	450W	A, A+, D, E, F, G	61.0100	143.00	**175.89**
1720 x 450mm	843	2876	450W	A, A+, D, E, F, G	61.0101	156.00	**191.88**
1720 x 600mm	1072	3658	600W	A, A+, D, E, F, G	61.0102	177.00	**217.71**
1720 x 750mm	1302	4442	750W	A, A+, D, E, F, G	61.0103	198.00	**243.54**

Biava Multirail Hidden Vent (HV) Straight - Matt Black

Size H x W	Watts	BTU	Element Output	Element Type	Code	€ Ex VAT	€ Inc VAT
360 x 400mm	145	495	100W	A, A+, D, E, F, G	61.0104	65.00	**79.95**
688 x 450mm	344	1174	150W	A, A+, D, E, F, G	61.0105	89.00	**109.47**
688 x 600mm	438	1494	150W	A, A+, D, E, F, G	61.0106	97.00	**119.31**
688 x 750mm	532	1815	300W	A, A+, D, E, F, G	61.0107	105.00	**129.15**
1118 x 450mm	546	1863	300W	A, A+, D, E, F, G	61.0108	115.00	**141.45**
1118 x 600mm	695	2371	300W	A, A+, D, E, F, G	61.0109	129.00	**158.67**
1118 x 750mm	843	2876	450W	A, A+, D, E, F, G	61.0110	143.00	**175.89**
1720 x 450mm	843	2876	450W	A, A+, D, E, F, G	61.0111	156.00	**191.88**
1720 x 600mm	1072	3658	600W	A, A+, D, E, F, G	61.0112	177.00	**217.71**
1720 x 750mm	1302	4442	750W	A, A+, D, E, F, G	61.0113	198.00	**243.54**

Multirail Range

TUSCAN - GLOSS WHITE / CHROME



Pictured 41.0317 Gloss White


Pictured 41.0309 Chrome

Warranty 5 Year | Diameter (Ø) 22 MM Bars | Heating | All Electric | Dual-Fuel

A simple design straight ladder rail which is the ideal combination of modern style and practicality. The range includes chrome and gloss white options in a range of sizes.

FEATURES
- 22mm diameter horizontal round tubes
- Rear fixing wall brackets
- Tested to BS EN 442 standards
- 5 Year manufacturer's warranty*
- Can be single or dual fuel, or all electric

* With conditions

Technical Tables & Drawings
Page 746-747

Round Vent Caps
Page 741

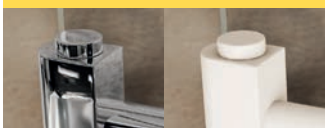

Room Divider Bracket Sets
Page 739



TECHNICAL INFORMATION

All measurements in Height by Width. Heat output based on ▲T60˚C. Radiators that are electric only are restricted to the heat output of the elements. Element size can be increased to full capacity of rail if using element type D, E, F or G. For element types see pages 718-729. For matching valves see pages 731-737. For indirect heating systems only. Tappings are approx. 50mm less than the width of the rail and approx. 75mm off the wall. Price includes radiator and wall fixing sets, valves extra.

Tuscan - Gloss White

Size H x W	Watts	BTU	Element Output	Element Type	Code	€ Ex VAT	€ Inc VAT
650 x 450mm	180	614	100W	A, A+, D, E, F, G	41.0314	84.00	**103.32**
650 x 600mm	212	723	100W	A, A+, D, E, F, G	41.0315	93.00	**114.39**
1200 x 450mm	315	1075	150W	A, A+, D, E, F, G	41.0316	112.00	**137.76**
1200 x 600mm	365	1245	150W	A, A+, D, E, F, G	41.0317	119.00	**146.37**
1750 x 450mm	464	1583	150W	A, A+, D, E, F, G	41.0318	145.00	**178.35**
1750 x 600mm	537	1832	300W	A, A+, D, E, F, G	41.0319	150.00	**184.50**

Tuscan - Chrome

Size H x W	Watts	BTU	Element Output	Element Type	Code	€ Ex VAT	€ Inc VAT
650 x 450mm	142	485	100W	A, A+, D, E, F, G	41.0308	118.00	**145.14**
650 x 600mm	166	566	100W	A, A+, D, E, F, G	41.0309	129.00	**158.67**
1200 x 450mm	247	843	150W	A, A+, D, E, F, G	41.0310	182.00	**223.86**
1200 x 600mm	286	976	150W	A, A+, D, E, F, G	41.0311	198.00	**243.54**
1750 x 450mm	366	1249	150W	A, A+, D, E, F, G	41.0312	250.00	**307.50**
1750 x 600mm	423	1443	150W	A, A+, D, E, F, G	41.0313	269.00	**330.87**

Multirail Range

WESTWARD - STRAIGHT

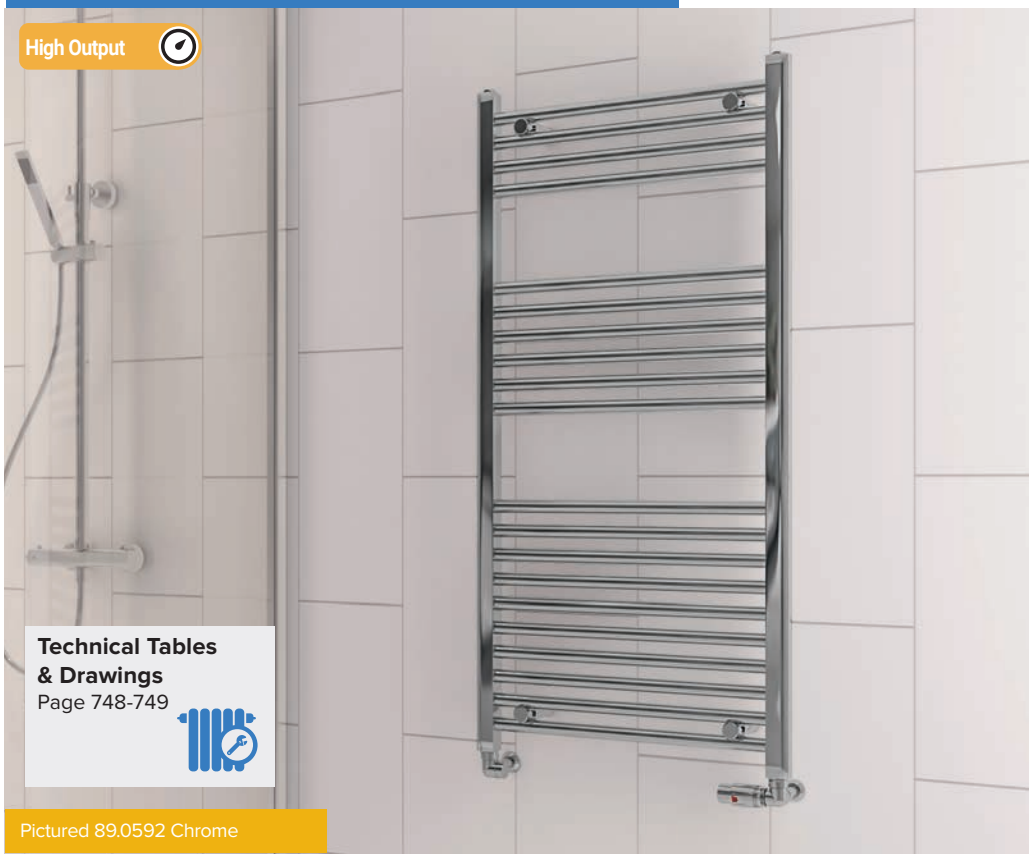



In addition to the Wingrave & Wendover ranges, this straight multirail boasts a higher output for the larger bathrooms. **Each horizontal tube is 25mm diameter, which produces a higher heat output in less space compared to a standard 22mm tube.**

FEATURES
- 25mm diameter horizontal round tubes
- Tested to BS EN 442 standards
- 5 Year manufacturer's warranty*
- Can be single or dual fuel, or all electric

* With conditions

D Shape Vent Caps
Page 741



Towel Hangers
Page 738



Room Divider Bracket Sets
Page 739



Robe Hooks
Page 738



Multi-Rail Hangers
Page 738



Tube Diameter
25mm

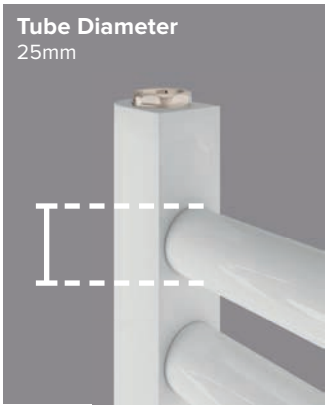

Diameter (Ø) 25 MM Bars

Heating

All Electric

Dual-Fuel

Multirail Range

WESTWARD - STRAIGHT

Gloss White

Westward - Straight Gloss White 600mm Height

Size H x W	Watts	BTU	Element Output	Element Type	Code	€ Ex VAT	€ Inc VAT
600 x 500mm	371	1266	150W	A, A+, D, E, F, G	89.0572	107.00	**131.61**
600 x 600mm	434	1481	150W	A, A+, D, E, F, G	89.0573	114.00	**140.22**
600 x 800mm	560	1911	300W	A, A+, D, E, F, G	89.0574	135.00	**166.05**

Westward - Straight Gloss White 800mm Height

Size H x W	Watts	BTU	Element Output	Element Type	Code	€ Ex VAT	€ Inc VAT
800 x 400mm	399	1361	150W	A, A+, D, E, F, G	89.0575	105.00	**129.15**
800 x 500mm	479	1634	300W	A, A+, D, E, F, G	89.0576	114.00	**140.22**
800 x 600mm	599	1907	300W	A, A+, D, E, F, G	89.0577	118.00	**145.14**

Westward - Straight Gloss White 1200mm Height

Size H x W	Watts	BTU	Element Output	Element Type	Code	€ Ex VAT	€ Inc VAT
1200 x 400mm	550	1877	300W	A, A+, D, E, F, G	89.0578	135.00	**166.05**
1200 x 500mm	660	2252	300W	A, A+, D, E, F, G	89.0579	145.00	**178.35**
1200 x 600mm	768	2621	450W	A, A+, D, E, F, G	89.0580	157.00	**193.11**

Westward - Straight Gloss White 1800mm Height

Size H x W	Watts	BTU	Element Output	Element Type	Code	€ Ex VAT	€ Inc VAT
1800 x 400mm	816	2784	450W	A, A+, D, E, F, G	89.0581	185.00	**227.55**
1800 x 500mm	978	3337	600W	A, A+, D, E, F, G	89.0582	215.00	**264.45**
1800 x 600mm	1140	3890	600W	A, A+, D, E, F, G	89.0583	216.00	**265.68**

Chrome

Westward - Straight Chrome 600mm Height

Size H x W	Watts	BTU	Element Output	Element Type	Code	€ Ex VAT	€ Inc VAT
600 x 500mm	245	836	150W	A, A+, D, E, F, G	89.0584	167.00	**205.41**
600 x 600mm	287	979	150W	A, A+, D, E, F, G	89.0585	182.00	**223.86**
600 x 800mm	371	1266	150W	A, A+, D, E, F, G	89.0586	216.00	**265.68**

Westward - Straight Chrome 800mm Height

Size H x W	Watts	BTU	Element Output	Element Type	Code	€ Ex VAT	€ Inc VAT
800 x 400mm	263	897	150W	A, A+, D, E, F, G	89.0587	157.00	**193.11**
800 x 500mm	316	1078	150W	A, A+, D, E, F, G	89.0588	174.00	**214.02**
800 x 600mm	370	1262	150W	A, A+, D, E, F, G	89.0589	191.00	**234.93**

Westward - Straight Chrome 1200mm Height

Size H x W	Watts	BTU	Element Output	Element Type	Code	€ Ex VAT	€ Inc VAT
1200 x 400mm	375	1280	150W	A, A+, D, E, F, G	89.0590	210.00	**258.30**
1200 x 500mm	450	1535	150W	A, A+, D, E, F, G	89.0591	240.00	**295.20**
1200 x 600mm	524	1788	300W	A, A+, D, E, F, G	89.0592	259.00	**318.57**

Westward - Straight Chrome 1800mm Height

Size H x W	Watts	BTU	Element Output	Element Type	Code	€ Ex VAT	€ Inc VAT
1800 x 400mm	564	1924	300W	A, A+, D, E, F, G	89.0593	315.00	**387.45**
1800 x 500mm	677	2310	300W	A, A+, D, E, F, G	89.0594	345.00	**424.35**
1800 x 600mm	788	2689	450W	A, A+, D, E, F, G	89.0595	373.00	**458.79**

Radiator Valves
Page 731-737



TECHNICAL INFORMATION

All measurements in Height by Width. Heat output based on ▲T60˚C. Radiators that are electric only are restricted to the heat output of the elements. Element size can be increased to full capacity of rail if using element type D, E, F or G. For element types see pages 718-729. For matching valves see pages 731-737. For indirect heating systems only. Tappings are approx. 44mm less than the width of the rail and approx. 65mm off the wall. Price includes radiator and wall fixing sets, valves extra.

600mm High



800mm High



1200mm High



1800mm High



Multirail Range

RION MULTIRAIL

New Product

NEW



Pictured 89.1691 Chrome

Rear fixing metal wall brackets

Bar Dimensions (mm)

Horizontal Bars 20 x 20mm
Vertical Bars D Shape 40 x 30mm

Technical Tables & Drawings
Page 748-749



Pictured 89.1677 Matt Anthracite

D Shaped vertical bars meet square 20x20mm horizontal bars in this modern and elegant designed towel rail. Available in 3 heights and 2 widths with 4 colour options.

FEATURES
- 40x30mm D shape vertical bars with 20x20mm square horizontal bars
- Rear fixing metal wall brackets
- Tested to BS EN 442 standards
- 4 colours available from stock
- 5 Year Manufacturer's Warranty*

*With conditions



SWATCHES AVAILABLE

Round Vent Caps
Page 741



Multirail Range

New Product

RION MULTIRAIL

Rion Multirail - Gloss White

Size H x W	Watts	BTU	Element Output	Element Type	Code	€ Ex VAT	€ Inc VAT
800 x 500mm	419	1430	150W	A, A+, D, E, F, G	89.1671	180.00	**221.40**
800 x 600mm	478	1631	150W	A, A+, D, E, F, G	89.1672	203.00	**249.69**
1200 x 500mm	649	2215	150W	A, A+, D, E, F, G	89.1673	299.00	**367.77**
1200 x 600mm	740	2525	300W	A, A+, D, E, F, G	89.1674	327.00	**402.21**
1800 x 500mm	985	3361	300W	A, A+, D, E, F, G	89.1675	420.00	**516.60**
1800 x 600mm	1122	3829	300W	A, A+, D, E, F, G	89.1676	462.00	**568.26**

Rion Multirail - Matt Black

Size H x W	Watts	BTU	Element Output	Element Type	Code	€ Ex VAT	€ Inc VAT
800 x 500mm	419	1430	150W	A, A+, D, E, F, G	89.1683	180.00	**221.40**
800 x 600mm	478	1631	150W	A, A+, D, E, F, G	89.1684	203.00	**249.69**
1200 x 500mm	649	2215	150W	A, A+, D, E, F, G	89.1685	299.00	**367.77**
1200 x 600mm	740	2525	300W	A, A+, D, E, F, G	89.1686	327.00	**402.21**
1800 x 500mm	985	3361	300W	A, A+, D, E, F, G	89.1687	420.00	**516.60**
1800 x 600mm	1122	3829	300W	A, A+, D, E, F, G	89.1688	462.00	**568.26**

Rion Multirail - Matt Anthracite

Size H x W	Watts	BTU	Element Output	Element Type	Code	€ Ex VAT	€ Inc VAT
800 x 500mm	419	1430	150W	A, A+, D, E, F, G	89.1677	180.00	**221.40**
800 x 600mm	478	1631	150W	A, A+, D, E, F, G	89.1678	203.00	**249.69**
1200 x 500mm	649	2215	150W	A, A+, D, E, F, G	89.1679	299.00	**367.77**
1200 x 600mm	740	2525	300W	A, A+, D, E, F, G	89.1680	327.00	**402.21**
1800 x 500mm	985	3361	300W	A, A+, D, E, F, G	89.1681	420.00	**516.60**
1800 x 600mm	1122	3829	300W	A, A+, D, E, F, G	89.1682	462.00	**568.26**

Rion Multirail - Chrome

Size H x W	Watts	BTU	Element Output	Element Type	Code	€ Ex VAT	€ Inc VAT
800 x 500mm	269	918	100W	A, A+, D, E, F, G	89.1689	262.00	**322.26**
800 x 600mm	304	1038	100W	A, A+, D, E, F, G	89.1690	297.00	**365.31**
1200 x 500mm	420	1434	150W	A, A+, D, E, F, G	89.1691	439.00	**539.97**
1200 x 600mm	475	1621	150W	A, A+, D, E, F, G	89.1692	478.00	**587.94**
1800 x 500mm	653	2229	150W	A, A+, D, E, F, G	89.1693	616.00	**757.68**
1800 x 600mm	738	2519	300W	A, A+, D, E, F, G	89.1694	678.00	**833.94**

TECHNICAL INFORMATION

All measurements in Height by Width. Heat output based on ▲T60˚C. Radiators that are electric only are restricted to the heat output of the elements. Element size can be increased to full capacity of rail if using element type D, E, F or G. For element types see pages 718-729. For matching valves see pages 731-737. For indirect heating systems only. Tappings are approx. 45mm less than the width of the rail and approx. 80mm off the wall. Price includes radiator and wall fixing sets, valves extra.



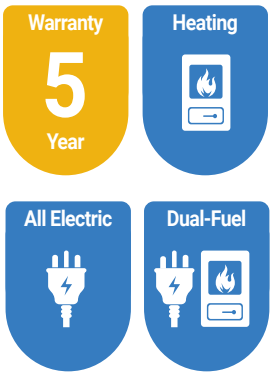













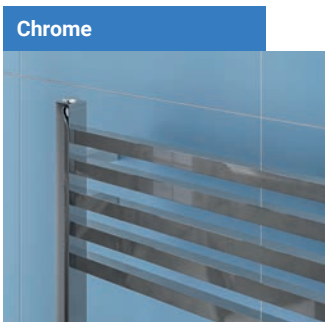

Multirail Range

CORINIUM ROUND



Pictured 89.1571 Chrome

Rear fixing metal wall brackets



Pictured 89.1556 Matt Anthracite

A brand new edition to the Eastbrook Multirail Range. Available in a variety of colours to suit any bathroom. The generous spacing between the horizontal tubes allows for maximum towel drying.

FEATURES

- 22mm diameter horizontal round tubes
- 42mm diameter vertical profiles
- Rear fixing metal wall brackets
- Tested to BS EN 442 standards
- 5 colours available from stock
- State-of-the-Art welding technology
- 5 Year Manufacturer's Warranty*

* With conditions



SWATCHES AVAILABLE

Round Vent Caps
Page 741



Multirail Range

CORINIUM ROUND

Corinium Round - Gloss White

Size H x W	Watts	BTU	Element Output	Element Type	Code	€ Ex VAT	€ Inc VAT
800 x 500mm	392	1338	150W	A, A+, D, E, F, G	89.1542	159.00	**195.57**
800 x 600mm	458	1563	150W	A, A+, D, E, F, G	89.1543	182.00	**223.86**
1200 x 500mm	596	2034	150W	A, A+, D, E, F, G	89.1544	205.00	**252.15**
1200 x 600mm	696	2375	150W	A, A+, D, E, F, G	89.1545	237.00	**291.51**
1800 x 500mm	906	3092	300W	A, A+, D, E, F, G	89.1546	282.00	**346.86**
1800 x 600mm	1058	3610	300W	A, A+, D, E, F, G	89.1547	328.00	**403.44**

Corinium Round - Matt Grey

Size H x W	Watts	BTU	Element Output	Element Type	Code	€ Ex VAT	€ Inc VAT
800 x 500mm	392	1338	150W	A, A+, D, E, F, G	89.1548	159.00	**195.57**
800 x 600mm	458	1563	150W	A, A+, D, E, F, G	89.1549	182.00	**223.86**
1200 x 500mm	596	2034	150W	A, A+, D, E, F, G	89.1550	205.00	**252.15**
1200 x 600mm	696	2375	150W	A, A+, D, E, F, G	89.1551	237.00	**291.51**
1800 x 500mm	906	3092	300W	A, A+, D, E, F, G	89.1552	282.00	**346.86**
1800 x 600mm	1058	3610	300W	A, A+, D, E, F, G	89.1553	328.00	**403.44**

Corinium Round - Chrome

Size H x W	Watts	BTU	Element Output	Element Type	Code	€ Ex VAT	€ Inc VAT
800 x 500mm	261	891	100W	A, A+, D, E, F, G	89.1566	240.00	**295.20**
800 x 600mm	305	1041	100W	A, A+, D, E, F, G	89.1567	276.00	**339.48**
1200 x 500mm	396	1352	150W	A, A+, D, E, F, G	89.1568	339.00	**416.97**
1200 x 600mm	462	1577	150W	A, A+, D, E, F, G	89.1569	394.00	**484.62**
1800 x 500mm	606	2068	300W	A, A+, D, E, F, G	89.1570	453.00	**557.19**
1800 x 600mm	707	2413	300W	A, A+, D, E, F, G	89.1571	527.00	**648.21**

Corinium Round - Matt Anthracite

Size H x W	Watts	BTU	Element Output	Element Type	Code	€ Ex VAT	€ Inc VAT
800 x 500mm	392	1338	150W	A, A+, D, E, F, G	89.1554	159.00	**195.57**
800 x 600mm	458	1563	150W	A, A+, D, E, F, G	89.1555	182.00	**223.86**
1200 x 500mm	596	2034	150W	A, A+, D, E, F, G	89.1556	205.00	**252.15**
1200 x 600mm	696	2375	150W	A, A+, D, E, F, G	89.1557	237.00	**291.51**
1800 x 500mm	906	3092	300W	A, A+, D, E, F, G	89.1558	282.00	**346.86**
1800 x 600mm	1058	3610	300W	A, A+, D, E, F, G	89.1559	328.00	**403.44**

Corinium Round - Matt Black

Size H x W	Watts	BTU	Element Output	Element Type	Code	€ Ex VAT	€ Inc VAT
800 x 500mm	392	1338	150W	A, A+, D, E, F, G	89.1560	159.00	**195.57**
800 x 600mm	458	1563	150W	A, A+, D, E, F, G	89.1561	182.00	**223.86**
1200 x 500mm	596	2034	150W	A, A+, D, E, F, G	89.1562	205.00	**252.15**
1200 x 600mm	696	2375	150W	A, A+, D, E, F, G	89.1563	237.00	**291.51**
1800 x 500mm	906	3092	300W	A, A+, D, E, F, G	89.1564	282.00	**346.86**
1800 x 600mm	1058	3610	300W	A, A+, D, E, F, G	89.1565	328.00	**403.44**

Radiator Valves
Page 731-737



TECHNICAL INFORMATION

All measurements in Height by Width. Heat output based on ▲T60˚C. Radiators that are electric only are restricted to the heat output of the elements. Element size can be increased to full capacity of rail if using element type D, E, F or G. For element types see pages 718-729. For matching valves see pages 731-737. For indirect heating systems only. Tappings are approx. 42mm less than the width of the rail and approx. 85mm off the wall. Price includes radiator and wall fixing sets, valves extra.

Gloss White



Matt Grey



Chrome

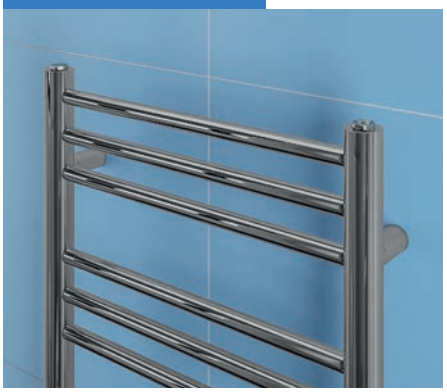

Matt Anthracite



Matt Black



State-of-the-Art welding



Multirail Range

TUSCAN ROUND

Warranty 5 Year

Diameter (Ø) 22 MM Bars

Heating



Pictured 89.1601 Chrome

Rear fixing metal wall brackets

All Electric

Dual-Fuel

Technical Tables & Drawings
Page 748-749



Pictured 89.1574 Gloss White

A popular addition to the Multirail Range. Available in a variety of colours to suit any bathroom. The generous spacing between the horizontal tubes allows for maximum towel drying.

FEATURES
- 22mm diameter horizontal round tubes
- 42mm diameter vertical profiles
- Rear fixing metal wall brackets
- Tested to BS EN 442 standards
- 5 colours available from stock
- State-of-the-Art welding technology
- 5 Year Manufacturer's Warranty*

* With conditions



SWATCHES AVAILABLE

Round Vent Caps
Page 741



Multirail Range

TUSCAN ROUND

Tuscan Round - Gloss White

Size H x W	Watts	BTU	Element Output	Element Type	Code	€ Ex VAT	€ Inc VAT
800 x 500mm	306	1045	100W	A, A+, D, E, F, G	89.1572	149.00	**183.27**
800 x 600mm	352	1202	100W	A, A+, D, E, F, G	89.1573	174.00	**214.02**
1200 x 500mm	459	1567	150W	A, A+, D, E, F, G	89.1574	192.00	**236.16**
1200 x 600mm	529	1805	150W	A, A+, D, E, F, G	89.1575	223.00	**274.29**
1800 x 500mm	688	2348	150W	A, A+, D, E, F, G	89.1576	266.00	**327.18**
1800 x 600mm	794	2710	300W	A, A+, D, E, F, G	89.1577	307.00	**377.61**

Tuscan Round - Matt Grey

Size H x W	Watts	BTU	Element Output	Element Type	Code	€ Ex VAT	€ Inc VAT
800 x 500mm	306	1045	100W	A, A+, D, E, F, G	89.1578	149.00	**183.27**
800 x 600mm	352	1202	100W	A, A+, D, E, F, G	89.1579	174.00	**214.02**
1200 x 500mm	459	1567	150W	A, A+, D, E, F, G	89.1580	192.00	**236.16**
1200 x 600mm	529	1805	150W	A, A+, D, E, F, G	89.1581	223.00	**274.29**
1800 x 500mm	688	2348	150W	A, A+, D, E, F, G	89.1582	266.00	**327.18**
1800 x 600mm	794	2710	300W	A, A+, D, E, F, G	89.1583	307.00	**377.61**

Tuscan Round - Chrome

Size H x W	Watts	BTU	Element Output	Element Type	Code	€ Ex VAT	€ Inc VAT
800 x 500mm	201	686	100W	A, A+, D, E, F, G	89.1596	220.00	**270.60**
800 x 600mm	232	792	100W	A, A+, D, E, F, G	89.1597	254.00	**312.42**
1200 x 500mm	303	1034	100W	A, A+, D, E, F, G	89.1598	318.00	**391.14**
1200 x 600mm	350	1195	100W	A, A+, D, E, F, G	89.1599	370.00	**455.10**
1800 x 500mm	454	1550	150W	A, A+, D, E, F, G	89.1600	426.00	**523.98**
1800 x 600mm	525	1792	150W	A, A+, D, E, F, G	89.1601	493.00	**606.39**

Tuscan Round - Matt Anthracite

Size H x W	Watts	BTU	Element Output	Element Type	Code	€ Ex VAT	€ Inc VAT
800 x 500mm	306	1045	100W	A, A+, D, E, F, G	89.1584	149.00	**183.27**
800 x 600mm	352	1202	100W	A, A+, D, E, F, G	89.1585	174.00	**214.02**
1200 x 500mm	459	1567	150W	A, A+, D, E, F, G	89.1586	192.00	**236.16**
1200 x 600mm	529	1805	150W	A, A+, D, E, F, G	89.1587	223.00	**274.29**
1800 x 500mm	688	2348	150W	A, A+, D, E, F, G	89.1588	266.00	**327.18**
1800 x 600mm	794	2710	300W	A, A+, D, E, F, G	89.1589	307.00	**377.61**

Tuscan Round - Matt Black

Size H x W	Watts	BTU	Element Output	Element Type	Code	€ Ex VAT	€ Inc VAT
800 x 500mm	306	1045	100W	A, A+, D, E, F, G	89.1590	149.00	**183.27**
800 x 600mm	352	1202	100W	A, A+, D, E, F, G	89.1591	174.00	**214.02**
1200 x 500mm	459	1567	150W	A, A+, D, E, F, G	89.1592	192.00	**236.16**
1200 x 600mm	529	1805	150W	A, A+, D, E, F, G	89.1593	223.00	**274.29**
1800 x 500mm	688	2348	150W	A, A+, D, E, F, G	89.1594	266.00	**327.18**
1800 x 600mm	794	2710	300W	A, A+, D, E, F, G	89.1595	307.00	**377.61**

Radiator Valves
Page 731-737



TECHNICAL INFORMATION

All measurements in Height by Width. Heat output based on ▲T60˚C. Radiators that are electric only are restricted to the heat output of the elements. Element size can be increased to full capacity of rail if using element type D, E, F or G. For element types see pages 718-729. For matching valves see pages 731-737. For indirect heating systems only. Tappings are approx. 42mm less than the width of the rail and approx. 85mm off the wall. Price includes radiator and wall fixing sets, valves extra.

Gloss White

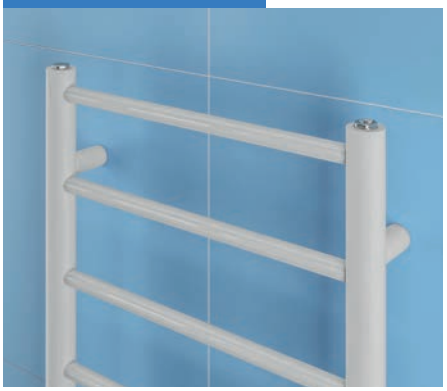

Matt Grey



Chrome



Matt Anthracite



Matt Black



State-of-the-Art welding



Multirail Range

BIAVA ROUND



Pictured 41.0159 Gloss White



Pictured 41.0152 Chrome

Rear fixing wall brackets

A high quality modern, straight towel rail with a durable shiny chrome finish and round rails. A functional radiator with spacing to allow the warming of many towels yet with style that is aesthetically pleasing and will fit into any bathroom.

Biava Round - Gloss White

Size H x W	Watts	BTU	Element Output	Element Type	Code	€ Ex VAT	€ Inc VAT
600 x 400mm	218	744	100W	A, A+, D, E, F, G	41.0154	121.00	**148.83**
600 x 500mm	257	877	150W	A, A+, D, E, F, G	41.0157	128.00	**157.44**
600 x 600mm	296	1010	150W	A, A+, D, E, F, G	41.0160	133.00	**163.59**
1200 x 400mm	412	1406	150W	A, A+, D, E, F, G	41.0155	182.00	**223.86**
1200 x 500mm	482	1645	300W	A, A+, D, E, F, G	41.0158	198.00	**243.54**
1200 x 600mm	552	1883	300W	A, A+, D, E, F, G	41.0161	208.00	**255.84**
1800 x 400mm	618	2109	300W	A, A+, D, E, F, G	41.0156	250.00	**307.50**
1800 x 500mm	723	2467	450W	A, A+, D, E, F, G	41.0159	269.00	**330.87**
1800 x 600mm	827	2822	450W	A, A+, D, E, F, G	41.0162	286.00	**351.78**

Biava Round - Chrome

Size H x W	Watts	BTU	Element Output	Element Type	Code	€ Ex VAT	€ Inc VAT
600 x 400mm	172	587	100W	A, A+, D, E, F, G	41.0145	206.00	**253.38**
600 x 500mm	202	689	100W	A, A+, D, E, F, G	41.0148	215.00	**264.45**
600 x 600mm	234	798	150W	A, A+, D, E, F, G	41.0151	231.00	**284.13**
1200 x 400mm	324	1105	150W	A, A+, D, E, F, G	41.0146	329.00	**404.67**
1200 x 500mm	379	1293	150W	A, A+, D, E, F, G	41.0149	352.00	**432.96**
1200 x 600mm	435	1484	150W	A, A+, D, E, F, G	41.0152	378.00	**464.94**
1800 x 400mm	486	1658	300W	A, A+, D, E, F, G	41.0147	460.00	**565.80**
1800 x 500mm	569	1941	300W	A, A+, D, E, F, G	41.0150	496.00	**610.08**
1800 x 600mm	651	2221	300W	A, A+, D, E, F, G	41.0153	555.00	**682.65**

FEATURES

- 19mm diameter horizontal round tubes
- 38mm diameter vertical profiles
- Rear fixing wall brackets
- Tested to BS EN 442 standards
- 5 Year Manufacturer's Warranty*

* With conditions

Technical Tables & Drawings
Page 750-751

TECHNICAL INFORMATION

All measurements in Height by Width. Heat output based on ▲T60˚C. Radiators that are electric only are restricted to the heat output of the elements. Element size can be increased to full capacity of rail if using element type D, E, F or G. For element types see pages 718-729. For matching valves see pages 731-737. For indirect heating systems only. Tappings are approx. 40mm less than the width of the rail and approx. 63mm off the wall. Price includes radiator and wall fixing sets, valves extra.

Warranty 5 Year | Diameter (Ø) 19 MM Bars | Heating | All Electric | Dual-Fuel

Radiator Valves
Page 731-737



Multirail Range

BIAVA - TUBE ON TUBE, CHROME



Pictured 41.0171 Chrome

Round Vent Caps
Page 741

Multi-Rail Hangers
Page 738

A contemporary tubular design towel rail in a range of sizes and both chrome and white finshes. The tube on tube features produces a higher heat output.

FEATURES
- 19mm diameter horizontal round tubes
- 32mm diameter vertical profiles
- Tested to BS EN 442 standards
- 5 Year Manufacturer's Warranty*

* With conditions

Technical Tables & Drawings
Page 750-751

Biava - Tube on Tube - Chrome							
Size H x W	Watts	BTU	Element Output	Element Type	Code	€ Ex VAT	€ Inc VAT
600 x 400mm	183	624	100W	A, A+, D, E, F, G	41.0163	231.00	**284.13**
600 x 500mm	214	730	100W	A, A+, D, E, F, G	41.0166	243.00	**298.89**
600 x 600mm	245	836	150W	A, A+, D, E, F, G	41.0169	255.00	**313.65**
1200 x 400mm	428	1460	150W	A, A+, D, E, F, G	41.0164	419.00	**515.37**
1200 x 500mm	505	1723	300W	A, A+, D, E, F, G	41.0167	460.00	**565.80**
1200 x 600mm	580	1979	300W	A, A+, D, E, F, G	41.0170	492.00	**605.16**
1800 x 400mm	661	2255	300W	A, A+, D, E, F, G	41.0165	614.00	**755.22**
1800 x 500mm	780	2661	450W	A, A+, D, E, F, G	41.0168	667.00	**820.41**
1800 x 600mm	898	3064	450W	A, A+, D, E, F, G	41.0171	723.00	**889.29**

Warranty 5 Year | Diameter (Ø) 19 MM Bars | Heating | All Electric | Dual-Fuel

TECHNICAL INFORMATION

All measurements in Height by Width. Heat output based on ▲T60˚C. Radiators that are electric only are restricted to the heat output of the elements. Element size can be increased to full capacity of rail if using element type D, E, F or G. For element types see pages 718-729. For matching valves see pages 731-737. For indirect heating systems only. Tappings are approx. 50mm less than the width of the rail and approx. 55mm off the wall. Price includes radiator and wall fixing sets, valves extra.

Radiator Valves
Page 731-737



Robe Hooks
Page 738



Towel Hangers
Page 738



Multirail Range

LAUNTON

Pictured 61.0067 Chrome



Multirail Range



Pictured 61.0065 Matt Anthracite

LAUNTON

Launton towel radiator has built-in shelves that are also heated. This model will be the solution to dry all the towels of a big family.

FEATURES
- Tested to BS EN 442 standards
- Built-in heated shelves
- Can be single, dual fuel or all electric
- 5 Year Manufacturer's Warranty*

* With conditions

Launton - Matt White

Size H x W	Watts	BTU	Element Output	Element Type	Code	€ Ex VAT	€ Inc VAT
1200 x 500mm	439	1496	150W	A, A+, D, E, F, G	61.0062	478.00	**587.94**
1200 x 600mm	489	1670	300W	A, A+, D, E, F, G	61.0063	493.00	**606.39**

Launton - Matt Anthracite

Size H x W	Watts	BTU	Element Output	Element Type	Code	€ Ex VAT	€ Inc VAT
1200 x 500mm	439	1496	150W	A, A+, D, E, F, G	61.0064	478.00	**587.94**
1200 x 600mm	489	1670	300W	A, A+, D, E, F, G	61.0065	493.00	**606.39**

Launton - Chrome

Size H x W	Watts	BTU	Element Output	Element Type	Code	€ Ex VAT	€ Inc VAT
1200 x 500mm	290	991	150W	A, A+, D, E, F, G	61.0066	579.00	**712.17**
1200 x 600mm	324	1106	150W	A, A+, D, E, F, G	61.0067	600.00	**738.00**

TECHNICAL INFORMATION

All measurements in Height by Width. Heat output based on ▲T60˚C. Radiators that are electric only are restricted to the heat output of the elements. Element size can be increased to full capacity of rail if using element type D, E, F or G. For element types see pages 718-729. For matching valves see pages 731-737. For indirect heating systems only. Tappings are approx. 30mm less than the width of the rail and approx. 70-85mm off the wall. Projection from the wall is 255-270mm. Price includes radiator and wall fixing sets, valves extra.

Radiator Valves
Page 731-737



Matt White


Pictured 61.0063

Matt Anthracite


Pictured 61.0065

Matt Chrome


Pictured 61.0067

Round Vent Caps
Page 741



Technical Tables & Drawings
Page 750-751

Multirail Range

HADDENHAM

Pictured 61.0073 Chrome



Multirail Range



Pictured 61.0069 Matt White

HADDENHAM

Haddenham towel radiator is a perfect alternative for standard towel radiators thanks to its heated shelves and big capacity of drying many towels at once.

FEATURES
- 22mm diameter horizontal round tubes
- Tested to BS EN 442 standardss
- Built-in heated shelves
- Can be single, dual fuel or all electric
- 5 Year Manufacturer's Warranty*

* With conditions

Haddenham - Matt White

Size H x W	Watts	BTU	Element Output	Element Type	Code	€ Ex VAT	€ Inc VAT
1200 x 500mm	645	2200	300W	A, A+, D, E, F, G	61.0068	342.00	**420.66**
1200 x 600mm	732	2499	450W	A, A+, D, E, F, G	61.0069	355.00	**436.65**

Haddenham - Matt Anthracite

Size H x W	Watts	BTU	Element Output	Element Type	Code	€ Ex VAT	€ Inc VAT
1200 x 500mm	645	2200	300W	A, A+, D, E, F, G	61.0070	342.00	**420.66**
1200 x 600mm	732	2499	450W	A, A+, D, E, F, G	61.0071	355.00	**436.65**

Haddenham - Chrome

Size H x W	Watts	BTU	Element Output	Element Type	Code	€ Ex VAT	€ Inc VAT
1200 x 500mm	427	1457	150W	A, A+, D, E, F, G	61.0072	416.00	**511.68**
1200 x 600mm	485	1655	300W	A, A+, D, E, F, G	61.0073	446.00	**548.58**

TECHNICAL INFORMATION

All measurements in Height by Width. Heat output based on ▲T60˚C. Radiators that are electric only are restricted to the heat output of the elements. Element size can be increased to full capacity of rail if using element type D, E, F or G. For element types see pages 718-729. For matching valves see pages 731-737. For indirect heating systems only. Tappings are approx. 45mm less than the width of the rail and approx. 70-85mm off the wall. Projection from the wall is approx. 255-270mm. Price includes radiator and wall fixing sets, valves extra.

Robe Hooks
Page 738



Round Vent Caps
Page 741

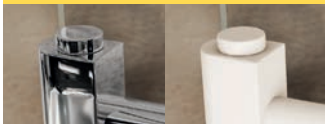

Towel Hangers
Page 738



Multi-Rail Hangers
Page 738



Technical Tables & Drawings
Page 750-751

Matt White


Pictured 61.0069

Matt Anthracite


Pictured 61.0071

Chrome


Pictured 61.0073

Multirail Range

BIAVA SQUARE - CHROME



Pictured 41.0116 Chrome



Technical Tables & Drawings
Page 752-753

Bar Dimensions (mm)

Horizontal Bars 22 x 22mm
Vertical Bars 40 x 40mm

Round Vent Caps
Page 741



A modern style square rail that still allows maximium space for keeping your towels warm.

Biava Square - Chrome

Size H x W	Watts	BTU	Element Output	Element Type	Code	€ Ex VAT	€ Inc VAT
600 x 400mm	221	754	100W	A, A+, D, E, F, G	41.0109	318.00	**391.14**
600 x 500mm	260	887	150W	A, A+, D, E, F, G	41.0112	345.00	**424.35**
600 x 600mm	299	1020	150W	A, A+, D, E, F, G	41.0115	373.00	**458.79**
1200 x 400mm	511	1744	300W	A, A+, D, E, F, G	41.0110	607.00	**746.61**
1200 x 500mm	612	2088	300W	A, A+, D, E, F, G	41.0113	688.00	**846.24**
1200 x 600mm	712	2429	300W	A, A+, D, E, F, G	41.0116	740.00	**910.20**
1800 x 400mm	746	2545	450W	A, A+, D, E, F, G	41.0111	847.00	**1041.81**
1800 x 500mm	889	3033	450W	A, A+, D, E, F, G	41.0114	948.00	**1166.04**
1800 x 600mm	1034	3528	600W	A, A+, D, E, F, G	41.0117	1043.00	**1282.89**

FEATURES
- Tested to BS EN 442 standards
- 5 Year manufacturer's warranty*
- Can be single or dual fuel, or all electric

* With conditions

Warranty 5 Year | Heating | All Electric | Dual-Fuel

TECHNICAL INFORMATION

All measurements in Height by Width. Heat output based on ▲T60˚C. Radiators that are electric only are restricted to the heat output of the elements. Element size can be increased to full capacity of rail if using element type D, E, F or G. For element types see pages 718-729. For matching valves see pages 731-737. For indirect heating systems only. Tappings are approx. 40mm less than the width of the rail and approx. 70mm off the wall. Price includes radiator and wall fixing sets, valves extra.

COMPLETE THE LOOK

Radiator Valves
Page: 731-737

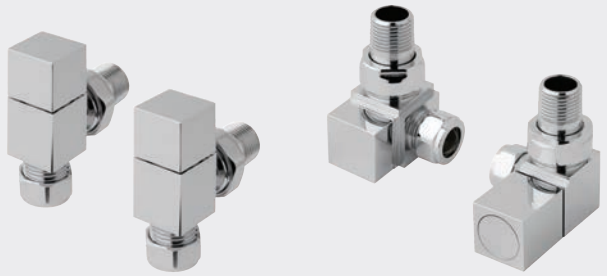

Multirail Range



Pictured 89.1270 Chrome

Bar Dimensions (mm)

Horizontal Bars 20 x 20mm
Vertical Bars 30 x 30mm

Evenly placed square bars of Tuscan Square is the new definition of minimalism.

Tuscan Square - Chrome

Size H x W	Watts	BTU	Element Output	Element Type	Code	€ Ex VAT	€ Inc VAT
800 x 500mm	201	686	100W	A, A+, D, E, F, G	89.1268	212.00	**260.76**
800 x 600mm	231	789	100W	A, A+, D, E, F, G	89.1269	230.00	**282.90**
1200 x 500mm	302	1031	100W	A, A+, D, E, F, G	89.1270	278.00	**341.94**
1200 x 600mm	347	1184	150W	A, A+, D, E, F, G	89.1271	303.00	**372.69**
1800 x 500mm	458	1563	150W	A, A+, D, E, F, G	89.1272	395.00	**485.85**
1800 x 600mm	526	1795	150W	A, A+, D, E, F, G	89.1273	426.00	**523.98**

FEATURES

- Tested to BS EN 442 standards
- Rear fixing metal wall brackets
- 5 Year manufacturer's warranty*
- Can be single or dual fuel, or all electric

* With conditions

Technical Tables & Drawings
Page 752-753

Warranty 5 Year | Heating | All Electric | Dual-Fuel

TUSCAN SQUARE - CHROME



Pictured 89.1273 Chrome

Rear fixing metal wall brackets

TECHNICAL INFORMATION

All measurements in Height by Width. Heat output based on ▲T60˚C. Radiators that are electric only are restricted to the heat output of the elements. Element size can be increased to full capacity of rail if using element type D, E, F or G. For element types see pages 718-729. For matching valves see pages 731-737. For indirect heating systems only. Tappings are approx. 30mm less than the width of the rail and approx. 80mm off the wall. Projection from wall is approx. 95mm. Price includes radiator and wall fixing sets, valves extra.

Round Vent Caps
Page 741



Multirail Range

TUSCAN SQUARE

Gloss White



Pictured 89.1244 Gloss White

Bar Dimensions (mm)

Horizontal Bars 20 x 20mm
Vertical Bars 30 x 30mm

Matt Grey



Pictured 89.1253 Matt Grey

Rear fixing metal wall brackets

FEATURES

- Tested to BS EN 442 standards
- Rear fixing metal wall brackets
- 5 Year manufacturer's warranty*
- Can be single or dual fuel, or all electric

* With conditions

Technical Tables & Drawings
Page 753-753

Tuscan Square - Gloss White

Size H x W	Watts	BTU	Element Output	Element Type	Code	€ Ex VAT	€ Inc VAT
800 x 500mm	305	1041	100W	A, A+, D, E, F, G	89.1244	161.00	**198.03**
800 x 600mm	349	1191	150W	A, A+, D, E, F, G	89.1245	177.00	**217.71**
1200 x 500mm	460	1570	150W	A, A+, D, E, F, G	89.1246	206.00	**253.38**
1200 x 600mm	527	1799	150W	A, A+, D, E, F, G	89.1247	223.00	**274.29**
1800 x 500mm	688	2348	300W	A, A+, D, E, F, G	89.1248	278.00	**341.94**
1800 x 600mm	789	2693	300W	A, A+, D, E, F, G	89.1249	303.00	**372.69**

Tuscan Square - Matt Grey

Size H x W	Watts	BTU	Element Output	Element Type	Code	€ Ex VAT	€ Inc VAT
800 x 500mm	305	1041	100W	A, A+, D, E, F, G	89.1250	161.00	**198.03**
800 x 600mm	349	1191	150W	A, A+, D, E, F, G	89.1251	177.00	**217.71**
1200 x 500mm	460	1570	150W	A, A+, D, E, F, G	89.1252	206.00	**253.38**
1200 x 600mm	527	1799	150W	A, A+, D, E, F, G	89.1253	223.00	**274.29**
1800 x 500mm	688	2348	300W	A, A+, D, E, F, G	89.1254	278.00	**341.94**
1800 x 600mm	789	2693	300W	A, A+, D, E, F, G	89.1255	303.00	**372.69**

Warranty 5 Year | Heating | All Electric | Dual-Fuel

TECHNICAL INFORMATION

All measurements in Height by Width. Heat output based on ▲T60˚C. Radiators that are electric only are restricted to the heat output of the elements. Element size can be increased to full capacity of rail if using element type D, E, F or G. For element types see pages 718-729. For matching valves see pages 731-737. For indirect heating systems only. Tappings are approx. 30mm less than the width of the rail and approx. 80mm off the wall. Projection from wall is approx. 95mm. Price includes radiator and wall fixing sets, valves extra.

Multirail Range

TUSCAN SQUARE

Matt Anthracite

Bar Dimensions (mm)

Horizontal Bars 20 x 20mm
Vertical Bars 30 x 30mm



Pictured 89.1257 Matt Anthracite

Matt Black



Pictured 89.1267 Matt Black

Rear fixing metal wall brackets

FEATURES

- Tested to BS EN 442 standards
- Rear fixing metal wall brackets
- 5 Year manufacturer's warranty*
- Can be single or dual fuel, or all electric

* With conditions

Technical Tables & Drawings

Page 752-753

Tuscan Square - Matt Anthracite

Size H x W	Watts	BTU	Element Output	Element Type	Code	€ Ex VAT	€ Inc VAT
800 x 500mm	305	1041	100W	A, A+, D, E, F, G	89.1256	161.00	**198.03**
800 x 600mm	349	1191	150W	A, A+, D, E, F, G	89.1257	177.00	**217.71**
1200 x 500mm	460	1570	150W	A, A+, D, E, F, G	89.1258	206.00	**253.38**
1200 x 600mm	527	1799	150W	A, A+, D, E, F, G	89.1259	223.00	**274.29**
1800 x 500mm	688	2348	300W	A, A+, D, E, F, G	89.1260	278.00	**341.94**
1800 x 600mm	789	2693	300W	A, A+, D, E, F, G	89.1261	303.00	**372.69**

Tuscan Square - Matt Black

Size H x W	Watts	BTU	Element Output	Element Type	Code	€ Ex VAT	€ Inc VAT
800 x 500mm	305	1041	100W	A, A+, D, E, F, G	89.1262	161.00	**198.03**
800 x 600mm	349	1191	150W	A, A+, D, E, F, G	89.1263	177.00	**217.71**
1200 x 500mm	460	1570	150W	A, A+, D, E, F, G	89.1264	206.00	**253.38**
1200 x 600mm	527	1799	150W	A, A+, D, E, F, G	89.1265	223.00	**274.29**
1800 x 500mm	688	2348	300W	A, A+, D, E, F, G	89.1266	278.00	**341.94**
1800 x 600mm	789	2693	300W	A, A+, D, E, F, G	89.1267	303.00	**372.69**

Warranty 5 Year | Heating | All Electric | Dual-Fuel

TECHNICAL INFORMATION

All measurements in Height by Width. Heat output based on ▲T60˚C. Radiators that are electric only are restricted to the heat output of the elements. Element size can be increased to full capacity of rail if using element type D, E, F or G. For element types see pages 718-729. For matching valves see pages 731-737. For indirect heating systems only. Tappings are approx. 30mm less than the width of the rail and approx. 80mm off the wall. Projection from wall is approx. 95mm. Price includes radiator and wall fixing sets, valves extra.

Multirail Range

TUSCAN SQUARE MULTIRAIL

New Product

NEW



Pictured 89.1667 Chrome



Pictured 89.1648 Gloss White

Technical Tables & Drawings
Page 752-753

Bar Dimensions (mm)

Horizontal Bars 20 x 20mm
Vertical Bars 30 x 30mm

Rear fixing metal wall brackets

The very popular Tuscan Square towel rail is now available as Multirail. Available in 3 heights and 2 widths with 4 colour options.

FEATURES

- 30x30mm square vertical bars with 20x20mm square horizontal bars
- Rear fixing metal wall brackets
- Tested to BS EN 442 standards
- 4 colours available from stock
- 5 Year Manufacturer's Warranty*

*With conditions



SWATCHES AVAILABLE

Round Vent Caps
Page 741



Multirail Range

New Product

TUSCAN SQUARE MULTIRAIL

Tuscan Square Multirail - Gloss White

Size H x W	Watts	BTU	Element Output	Element Type	Code	€ Ex VAT	€ Inc VAT
800 x 500mm	425	1451	150W	A, A+, D, E, F, G	89.1647	180.00	**221.40**
800 x 600mm	497	1696	150W	A, A+, D, E, F, G	89.1648	203.00	**249.69**
1200 x 500mm	662	2259	150W	A, A+, D, E, F, G	89.1649	299.00	**367.77**
1200 x 600mm	775	2645	300W	A, A+, D, E, F, G	89.1650	327.00	**402.21**
1800 x 500mm	980	3344	300W	A, A+, D, E, F, G	89.1651	420.00	**516.60**
1800 x 600mm	1147	3914	300W	A, A+, D, E, F, G	89.1652	462.00	**568.26**

Tuscan Square Multirail - Matt Black

Size H x W	Watts	BTU	Element Output	Element Type	Code	€ Ex VAT	€ Inc VAT
800 x 500mm	425	1451	150W	A, A+, D, E, F, G	89.1659	180.00	**221.40**
800 x 600mm	497	1696	150W	A, A+, D, E, F, G	89.1660	203.00	**249.69**
1200 x 500mm	662	2259	150W	A, A+, D, E, F, G	89.1661	299.00	**367.77**
1200 x 600mm	775	2645	300W	A, A+, D, E, F, G	89.1662	327.00	**402.21**
1800 x 500mm	980	3344	300W	A, A+, D, E, F, G	89.1663	420.00	**516.60**
1800 x 600mm	1147	3914	300W	A, A+, D, E, F, G	89.1664	462.00	**568.26**

Tuscan Square Multirail - Matt Anthracite

Size H x W	Watts	BTU	Element Output	Element Type	Code	€ Ex VAT	€ Inc VAT
800 x 500mm	425	1451	150W	A, A+, D, E, F, G	89.1653	180.00	**221.40**
800 x 600mm	497	1696	150W	A, A+, D, E, F, G	89.1654	203.00	**249.69**
1200 x 500mm	662	2259	150W	A, A+, D, E, F, G	89.1655	299.00	**367.77**
1200 x 600mm	775	2645	300W	A, A+, D, E, F, G	89.1656	327.00	**402.21**
1800 x 500mm	980	3344	300W	A, A+, D, E, F, G	89.1657	420.00	**516.60**
1800 x 600mm	1147	3914	300W	A, A+, D, E, F, G	89.1658	462.00	**568.26**

Tuscan Square Multirail - Chrome

Size H x W	Watts	BTU	Element Output	Element Type	Code	€ Ex VAT	€ Inc VAT
800 x 500mm	274	935	100W	A, A+, D, E, F, G	89.1665	262.00	**322.26**
800 x 600mm	316	1079	100W	A, A+, D, E, F, G	89.1666	297.00	**365.31**
1200 x 500mm	426	1454	150W	A, A+, D, E, F, G	89.1667	439.00	**539.97**
1200 x 600mm	491	1676	150W	A, A+, D, E, F, G	89.1668	478.00	**587.94**
1800 x 500mm	645	2201	150W	A, A+, D, E, F, G	89.1669	616.00	**757.68**
1800 x 600mm	744	2539	300W	A, A+, D, E, F, G	89.1670	678.00	**833.94**

TECHNICAL INFORMATION

All measurements in Height by Width. Heat output based on ▲T60˚C. Radiators that are electric only are restricted to the heat output of the elements. Element size can be increased to full capacity of rail if using element type D, E, F or G. For element types see pages 718-729. For matching valves see pages 731-737. For indirect heating systems only. Tappings are approx. 30mm less than the width of the rail and approx. 80mm off the wall. Price includes radiator and wall fixing sets, valves extra.

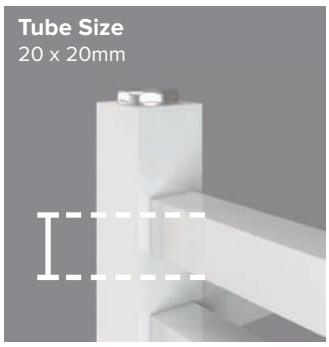

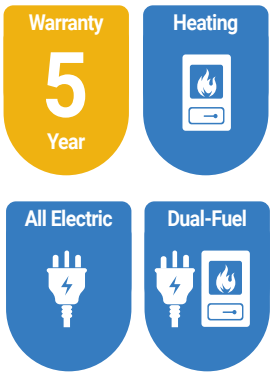

800mm High

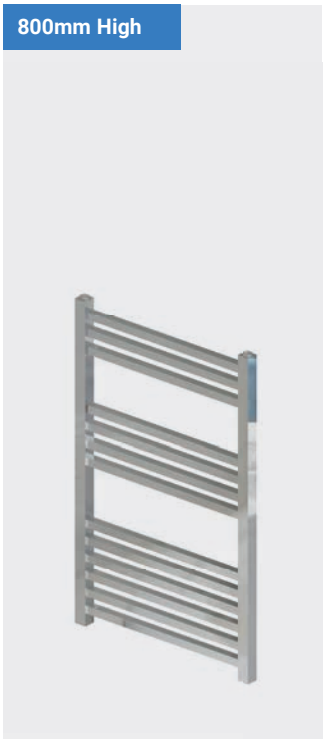

1200mm High



1800mm High



Gloss White



Matt Anthracite



Matt Black



Chrome





Sub Section

Dry Element Range

Using modern technology benefits, the Dry Element Range consists of lighter towel rails and energy efficient daily usage.



Contents

Biava Dry Element Straight, Available in 3 colours	520-521
Loddon Dry Element, Available in 4 colours - **NEW PRODUCT**	522-523
Kennet Dry Element, Matt Anthracite & Chrome - **NEW PRODUCT**	524
Emsbury Dry Element, Polished Stainless Steel - **NEW PRODUCT**	525

Dry Element Range

BIAVA DRY ELEMENT - STRAIGHT



Pictured 47.0001 Chrome with 67.0004 & 67.0005

Integrated On/Off Button



On/Off Button

Pictured 47.0015 Chrome

Biava Dry Element Towel Rail - Chrome [Integrated On/Off Button]

Size H x W	Watts	BTU	Code	€ Ex VAT	€ Inc VAT
1100 x 500mm	400	1365	47.0015	395.00	**485.85**

Biava Dry Element Towel Rail - Chrome

Size H x W	Watts	BTU	Code	€ Ex VAT	€ Inc VAT
700 x 500mm	250	853	47.0001	269.00	**330.87**
700 x 600mm	300	1024	47.0003	296.00	**364.08**
1100 x 500mm	400	1365	47.0002	357.00	**439.11**
1100 x 600mm	500	1706	47.0004	406.00	**499.38**

Biava Dry Element Towel Rail - Gloss White

Size H x W	Watts	BTU	Code	€ Ex VAT	€ Inc VAT
700 x 500mm	250	853	47.0005	205.00	**252.15**
700 x 600mm	300	1024	47.0007	231.00	**284.13**
1100 x 500mm	400	1365	47.0006	280.00	**344.40**
1100 x 600mm	500	1706	47.0008	317.00	**389.91**

Biava Dry Element Towel Rail - Matt Anthracite

Size H x W	Watts	BTU	Code	€ Ex VAT	€ Inc VAT
700 x 500mm	250	853	47.0009	227.00	**279.21**
700 x 600mm	300	1024	47.0011	254.00	**312.42**
1100 x 500mm	400	1365	47.0010	301.00	**370.23**
1100 x 600mm	500	1706	47.0012	349.00	**429.27**

FEATURES

- 19mm diameter horizontal round tubes
- No fluid filling required
- Just Connect and Go
- Material of towel rail: Mild Steel
- IPX4 Certificates (Zone 2 and 3)
- Compatible with the Crafton Temperature Control Plate
- 2 Year Manufacturer's Warranty*

* With conditions

This product is electric only installation and cannot be used on a central heating system.

TECHNICAL INFORMATION

All measurements in Height by Width. Heat output based on ▲T60˚C. This rail is reversible. Can not be fitted upside down.

Warranty 2 Year

Diameter (Ø) 19 MM Bars

All Electric

Technical Tables & Drawings
Page 752-753

Dry Element Range

BIAVA DRY ELEMENT - STRAIGHT

Gloss White



Pictured 47.0007 Gloss White with 67.0004

Chrome



Pictured 47.0004 Chrome with 67.0004 & 67.0005

Matt Anthracite



Pictured 47.0012 Matt Anthracite with 67.0004 & 67.0005



Pictured 67.0004



Pictured 67.0004 & 67.0005

Optional Extra - Crafton Temperature Control Panel

Description	Code	€ Ex VAT	€ Inc VAT
Crafton Temperature Control Panel	67.0004	150.00	**184.50**
Chrome Plate for Crafton Temp Panel	67.0005	51.00	**62.73**

This item is an additional extra, that can be used with all above colours of the Biava Dry Element Towel Rails. Please see page 730 for more product details.

Robe Hooks
Page 738



Towel Hangers
Page 738



Multi-Rail Hangers
Page 738



Dry Element Range

LODDON DRY ELEMENT

New Product



Pictured 47.0042 Chrome



Pictured 47.0035 Matt Black

FEATURES
- No fluid filling required
- Just connect and Go
- Material of Towel Rail : Mild Steel
- IPX4 certificates (Zone 2 and 3)
- 4 colours available from stock
- 2 Year Manufacturer's Warranty*

*With conditions

Technical Tables & Drawings
Page 754-755

Warranty 2 Year

All Electric

This product is electric only installation and cannot be used on a central heating system.

Dry Element Range

New Product

LODDON DRY ELEMENT

Loddon Dry Element Towel Rail - Matt White

Size H x W	Watts	BTU	Code	€ Ex VAT	€ Inc VAT
800 x 500mm*	300	1024	47.0027	563.00	**692.49**
800 x 600mm*	350	1195	47.0028	594.00	**730.62**
1200 x 500mm	450	1536	47.0029	693.00	**852.39**
1200 x 600mm	500	1707	47.0030	731.00	**899.13**

Loddon Dry Element Towel Rail - Matt Black

Size H x W	Watts	BTU	Code	€ Ex VAT	€ Inc VAT
800 x 500mm*	300	1024	47.0035	563.00	**692.49**
800 x 600mm*	350	1195	47.0036	594.00	**730.62**
1200 x 500mm	450	1536	47.0037	693.00	**852.39**
1200 x 600mm	500	1707	47.0038	731.00	**899.13**

Loddon Dry Element Towel Rail - Matt Anthracite

Size H x W	Watts	BTU	Code	€ Ex VAT	€ Inc VAT
800 x 500mm*	300	1024	47.0031	563.00	**692.49**
800 x 600mm*	350	1195	47.0032	594.00	**730.62**
1200 x 500mm	450	1536	47.0033	693.00	**852.39**
1200 x 600mm	500	1707	47.0034	731.00	**899.13**

*The total height of this rail is 780mm

Loddon Dry Element Towel Rail - Chrome

Size H x W	Watts	BTU	Code	€ Ex VAT	€ Inc VAT
800 x 500mm*	300	1024	47.0039	670.00	**824.10**
800 x 600mm*	350	1195	47.0040	748.00	**920.04**
1200 x 500mm	450	1536	47.0041	784.00	**964.32**
1200 x 600mm	500	1707	47.0042	861.00	**1059.03**

*The total height of this rail is 780mm

TECHNICAL INFORMATION

All measurements in Height by Width. Heat output based on ▲T60˚C. Can not be fitted upside down. Comes with an information label in the front that can be removed. Projection from wall 100mm.

Colour Coded Boost Function

The Loddon Dry Element towel rail has a colour coded boost function which allows the length of time the rail runs for to be set.

It can be on standby, 1 hour, 2 hours, 3 hours or continuously running.

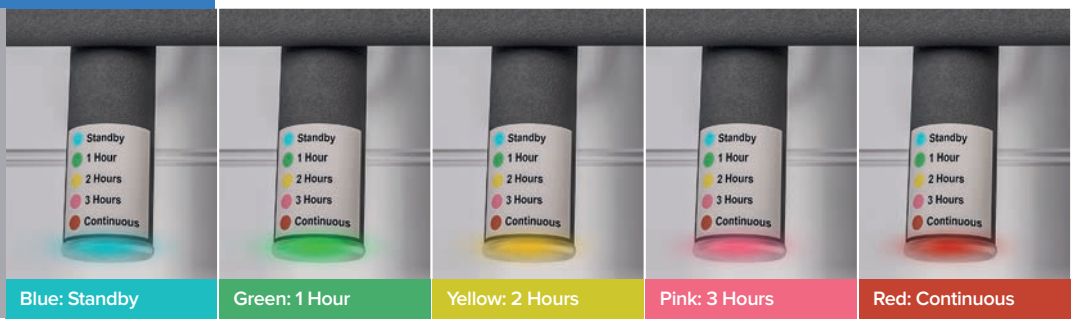

Blue: Standby | Green: 1 Hour | Yellow: 2 Hours | Pink: 3 Hours | Red: Continuous

Concealed or Exposed Wiring Option

The Loddon Dry Element towel rail can be installed with two different wiring options; an exposed wiring installation or concealed wiring installation.

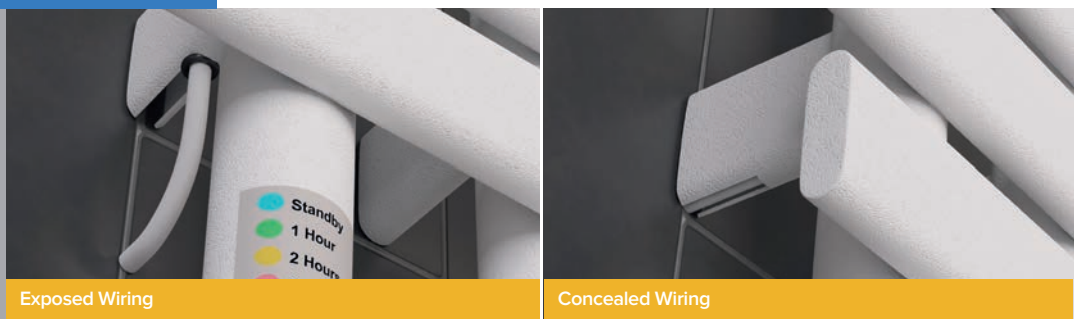

Exposed Wiring | Concealed Wiring

Matt White

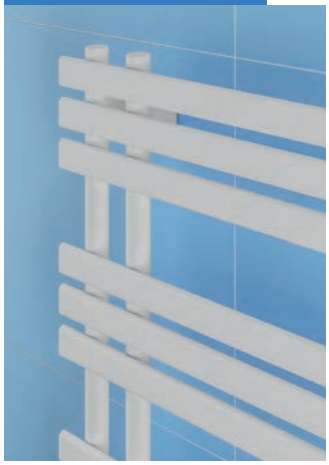

Matt Anthracite



Matt Black



Chrome



Dry Element Range

KENNET DRY ELEMENT

New Product



Pictured 47.0049 Chrome



Pictured 47.0044 Matt Anthracite

FEATURES
- No fluid filling required
- Just connect and Go
- Material of Towel Rail : Mild Steel
- IPX4 certificates (Zone 2 and 3)
- 2 colours available from stock
- 2 Year Manufacturer's Warranty*

*With conditions

Technical Tables & Drawings
Page 754-755

This product is electric only installation and cannot be used on a central heating system.

TECHNICAL INFORMATION

All measurements in Height by Width. Heat output based on ▲T60˚C. Can not be fitted upside down. Comes with an information label in the front that can be removed. Projection from wall 130mm.

Kennet Dry Element Towel Rail - Matt Anthracite

Size H x W	Watts	BTU	Code	€ Ex VAT	€ Inc VAT
700 x 500mm*	120	410	47.0043	527.00	**648.21**
700 x 600mm*	150	512	47.0044	558.00	**686.34**
1200 x 500mm**	200	683	47.0045	625.00	**768.75**
1200 x 600mm**	230	785	47.0046	677.00	**832.71**

Kennet Dry Element Towel Rail - Chrome

Size H x W	Watts	BTU	Code	€ Ex VAT	€ Inc VAT
700 x 500mm*	120	410	47.0047	601.00	**739.23**
700 x 600mm*	150	512	47.0048	626.00	**769.98**
1200 x 500mm**	200	683	47.0049	709.00	**872.07**
1200 x 600mm**	230	785	47.0050	762.00	**937.26**

* Height shown excludes bottom control leg. Total height is 744.5mm
** Height shown excludes bottom control leg. Total height is 1253mm

Colour Coded Boost Function

The Kennet Dry Element towel rail has a colour coded boost function which allows the length of time the rail runs for to be set. It can be on standby, 1 hour, 2 hours, 3 hours or continuously running.

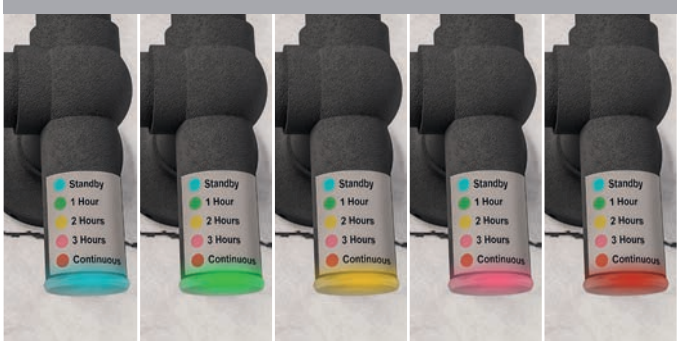

Standby | 1 Hour | 2 Hours | 3 Hours | Continuous

Dry Element Range

New Product

EMSBURY DRY ELEMENT

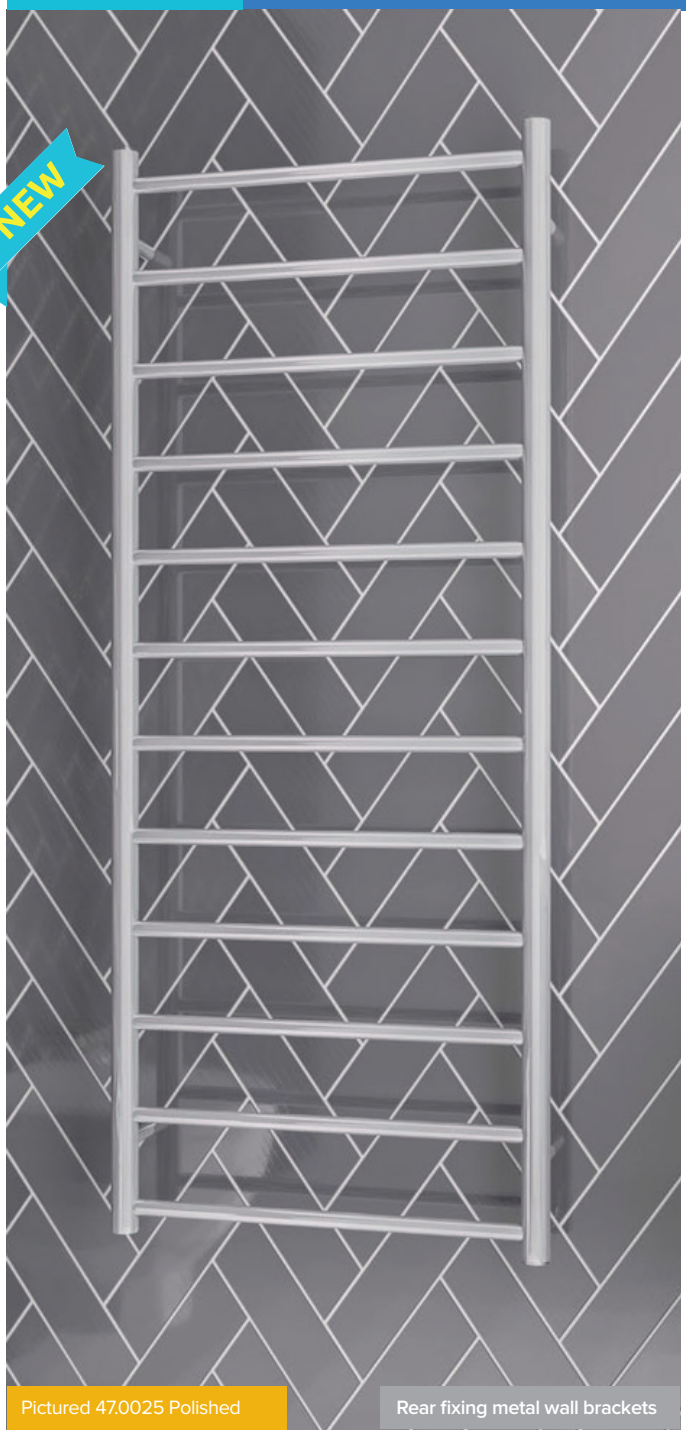



Emsbury Dry Element Towel Rail - Polished

Size H x W	Watts	BTU	Code	€ Ex VAT	€ Inc VAT
800 x 500mm	150	512	47.0023	548.00	**674.04**
800 x 600mm	200	683	47.0024	590.00	**725.70**
1200 x 500mm	250	854	47.0025	628.00	**772.44**
1200 x 600mm	300	1024	47.0026	654.00	**804.42**

FEATURES

- No fluid filling required
- Comes with integrated On/Off button
- Just connect and Go
- Material of Towel Rail : Grade 304 Stainless Steel
- Rear fixing metal wall brackets
- IPX4 certificates (Zone 2 and 3)
- Only available as polished surface finishing
- 2 Year Manufacturer's Warranty*

Technical Tables & Drawings
Page 754-755

This product is electric only installation and cannot be used on a central heating system.

TECHNICAL INFORMATION

All measurements in Height by Width. Heat output based on ▲T60˚C. Can not be fitted upside down. Projection from wall 92mm.

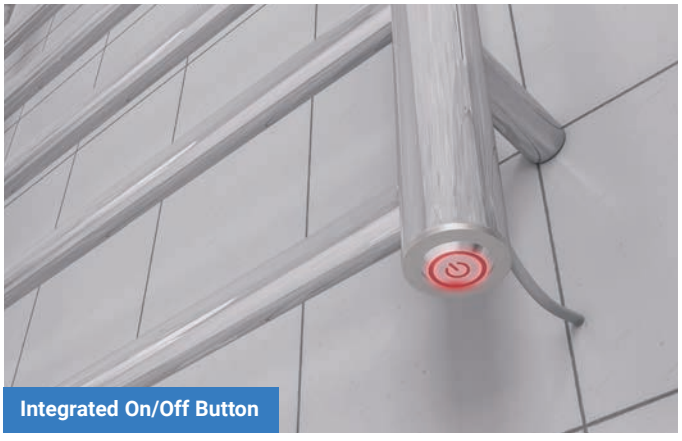

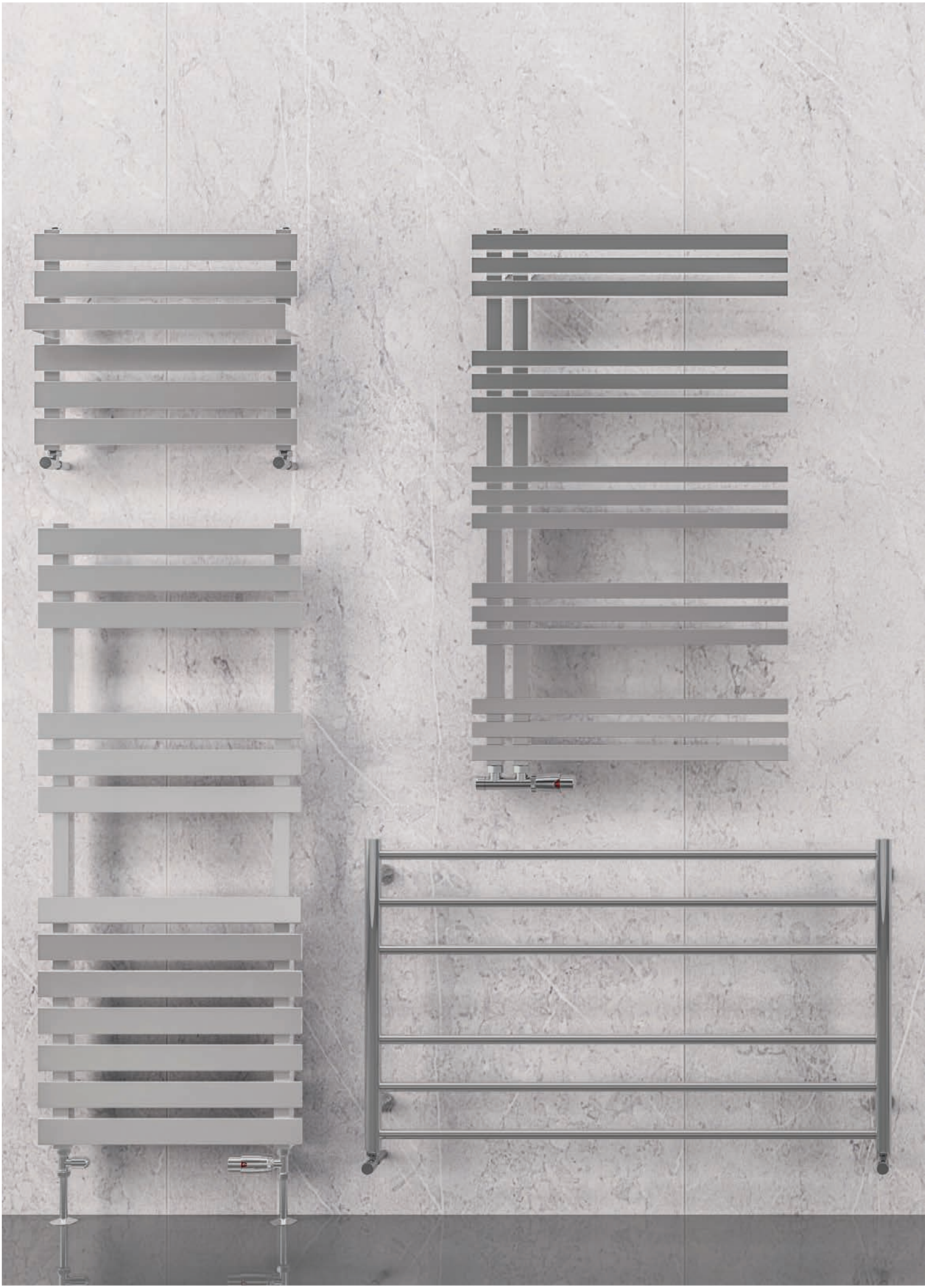

Sub Section

Stainless Steel Range

Whilst retaining the features of a ladder rail, the stainless steel range produces a stylish contemporary look.



Contents

Rizano, Polished	528
Violla, Polished	529
Biava Flat, Polished	530
Ascona, Polished	531

Stainless Steel Range

RIZANO

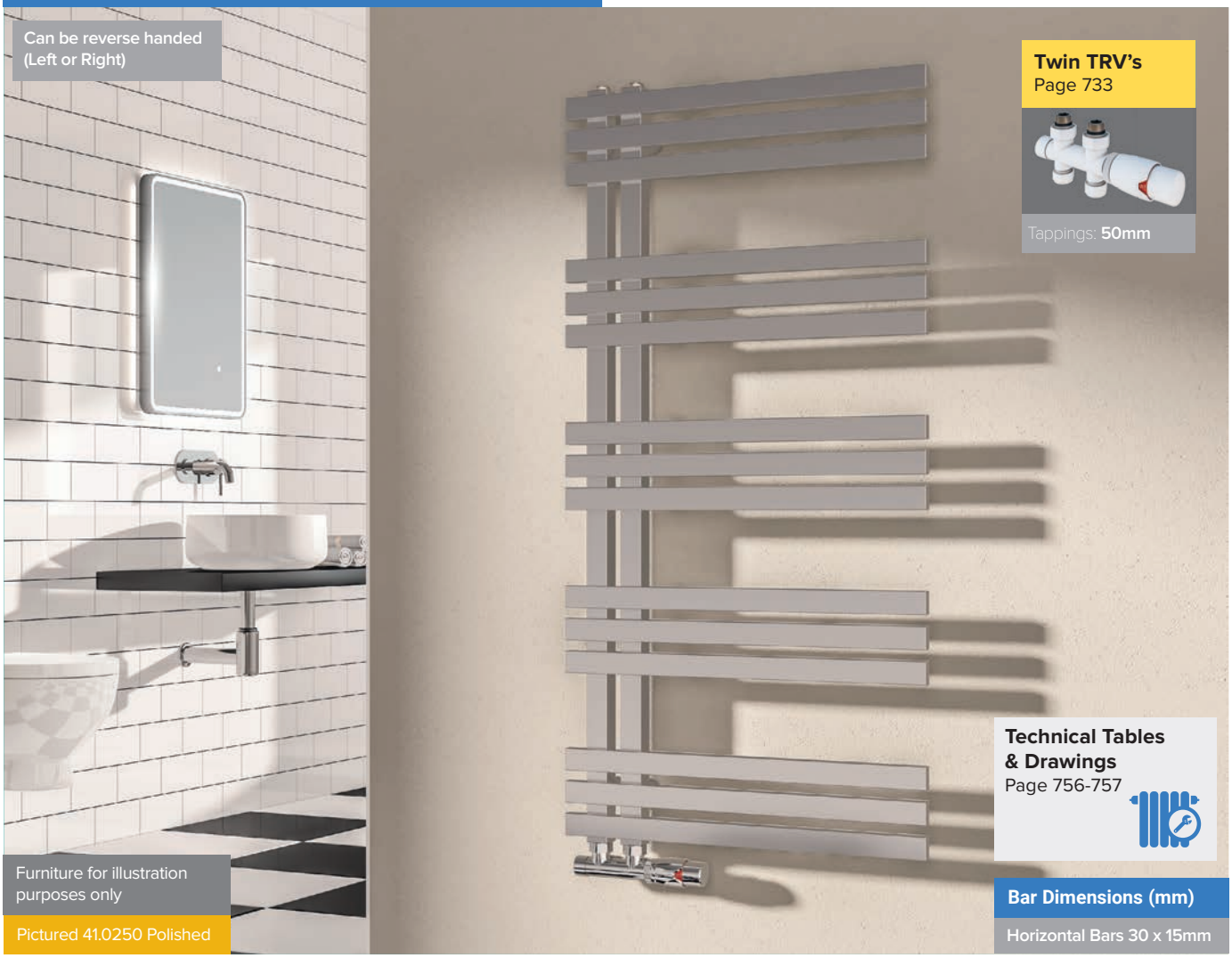

This sophisticated, ultra modern radiator adds a hugely useful feature with its single sided towel bars.

Rizano - Stainless Steel Polished

Size H x W	Watts	BTU	Element Output	Element Type	Code	€ Ex VAT	€ Inc VAT
1000 x 500mm	545	1859	300W	A, A+, D, E	41.0250	853.00	**1049.19**
1000 x 600mm	626	2136	300W	A, A+, D, E	41.0251	1174.00	**1444.02**

FEATURES

- Grade 304 Stainless Steel material
- Mirror polished surface (Chrome effect)
- Can be single, dual fuel or all electric
- Tested to BS EN 442 standards
- Tappings at the top and bottom. Can be reverse handed (left or right)
- Twin valves can be used with this towel rail
- 5 Year Manufacturer's Warranty*

* With conditions

TECHNICAL INFORMATION

All measurements in Height by Width. Heat output based on ▲T60˚C. Radiators that are electric only are restricted to the heat output of the elements. Element size can be increased to full capacity of rail if using element type D or E. For element types see pages 718-729. For matching valves see pages 731-737. For direct & indirect heating systems. Tappings are approx. 50mm and approx. 65mm off the wall. Price includes radiator and wall fixing sets, valves extra. Maximum working pressure: 4 bars.

Warranty 5 Year | Heating | All Electric | Dual-Fuel



Stainless Steel Range

VIOLLA





A take on the simple ladder rail design this radiator is both functional and minimalist. Rail spacing makes it easy to put a towel on all of the bars, making it the perfect family bathroom solution.

Violla - Stainless Steel Polished

Size H x W	Watts	BTU	Element Output	Element Type	Code	€ Ex VAT	€ Inc VAT
590 x 1000mm	231	788	150W	A, A+, D, E, F, G	91.0171	565.00	**694.95**
790 x 500mm	199	679	100W	A, A+, D, E, F, G	91.0172	551.00	**677.73**
790 x 600mm	226	771	150W	A, A+, D, E, F, G	91.0173	588.00	**723.24**
1210 x 500mm	320	1092	150W	A, A+, D, E, F, G	91.0174	623.00	**766.29**
1210 x 600mm	366	1249	150W	A, A+, D, E, F, G	91.0175	653.00	**803.19**
1630 x 500mm	416	1419	150W	A, A+, D, E, F, G	91.0176	814.00	**1001.22**
1630 x 600mm	474	1617	300W	A, A+, D, E, F, G	91.0177	962.00	**1183.26**

FEATURES

- Grade 304 Stainless Steel material
- Mirror polished surface (Chrome effect)
- Can be single, dual fuel or all electric
- Tested to BS EN 442 standards
- Rear fixing wall brackets
- Tappings only at the bottom
- Hidden air vent at the back
- Flush finished tops
- 5 Year Manufacturer's Warranty*

* With conditions

TECHNICAL INFORMATION

All measurements in Height by Width. Heat output based on ▲T60˚C. Radiators that are electric only are restricted to the heat output of the elements. Element size can be increased to full capacity of rail if using element type D, E, F or G. For element types see pages 718-729. For matching valves see pages 731-737. For direct & indirect heating systems. Tappings are approx. 32mm less than the width of the rail and approx. 79mm off the wall. Prices include radiator and wall fixings sets, valves extra. Maximum working pressure: 4 bars.

Stainless Steel Range

BIAVA FLAT

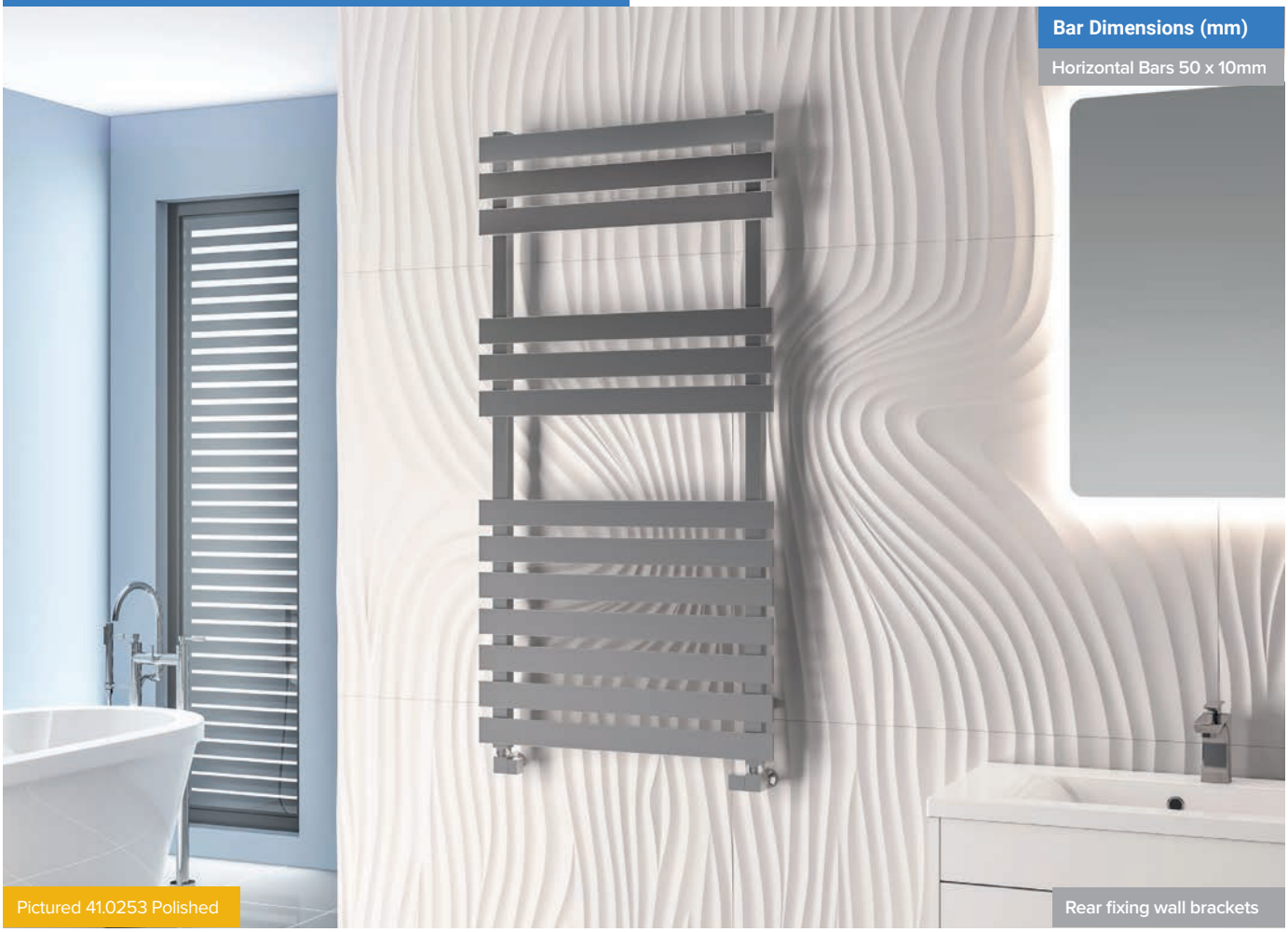

Whilst retaining the features of a ladder rail, this flat panelled radiator produces a stylish and contemporary look. The larger surface area of the flat panels allow for a higher heat output with no compromise on design.

Biava Flat - Stainless Steel Polished

Size H x W	Watts	BTU	Element Output	Element Type	Code	€ Ex VAT	€ Inc VAT
1190 x 500mm	621	2119	300W	A, A+, D, E	41.0252	971.00	**1194.33**
1190 x 600mm	712	2429	300W	A, A+, D, E	41.0253	1057.00	**1300.11**

FEATURES

- Grade 304 Stainless Steel material
- Mirror polished surface (Chrome effect)
- Can be single, dual fuel or all electric
- Tested to BS EN 442 standards
- Rear fixing wall brackets
- Tappings only at the bottom
- Hidden air vent at the back
- Flush finished tops
- 5 Year Manufacturer's Warranty*

* With conditions

Technical Tables & Drawings
Page 756-757



TECHNICAL INFORMATION

All measurements in Height by Width. Heat output based on ▲T60˚C. Radiators that are electric only are restricted to the heat output of the elements. Element size can be increased to full capacity of rail if using element type D or E. For element types see pages 718-729. For matching valves see pages 731-737. For direct & indirect heating systems. Tappings are approx. 80mm less than the width of the rail and approx. 65mm off the wall. Prices include radiator and wall fixings sets, valves extra. Maximum working pressure: 4 bars.

Warranty 5 Year | Heating | All Electric | Dual-Fuel

Stainless Steel Range

ASCONA

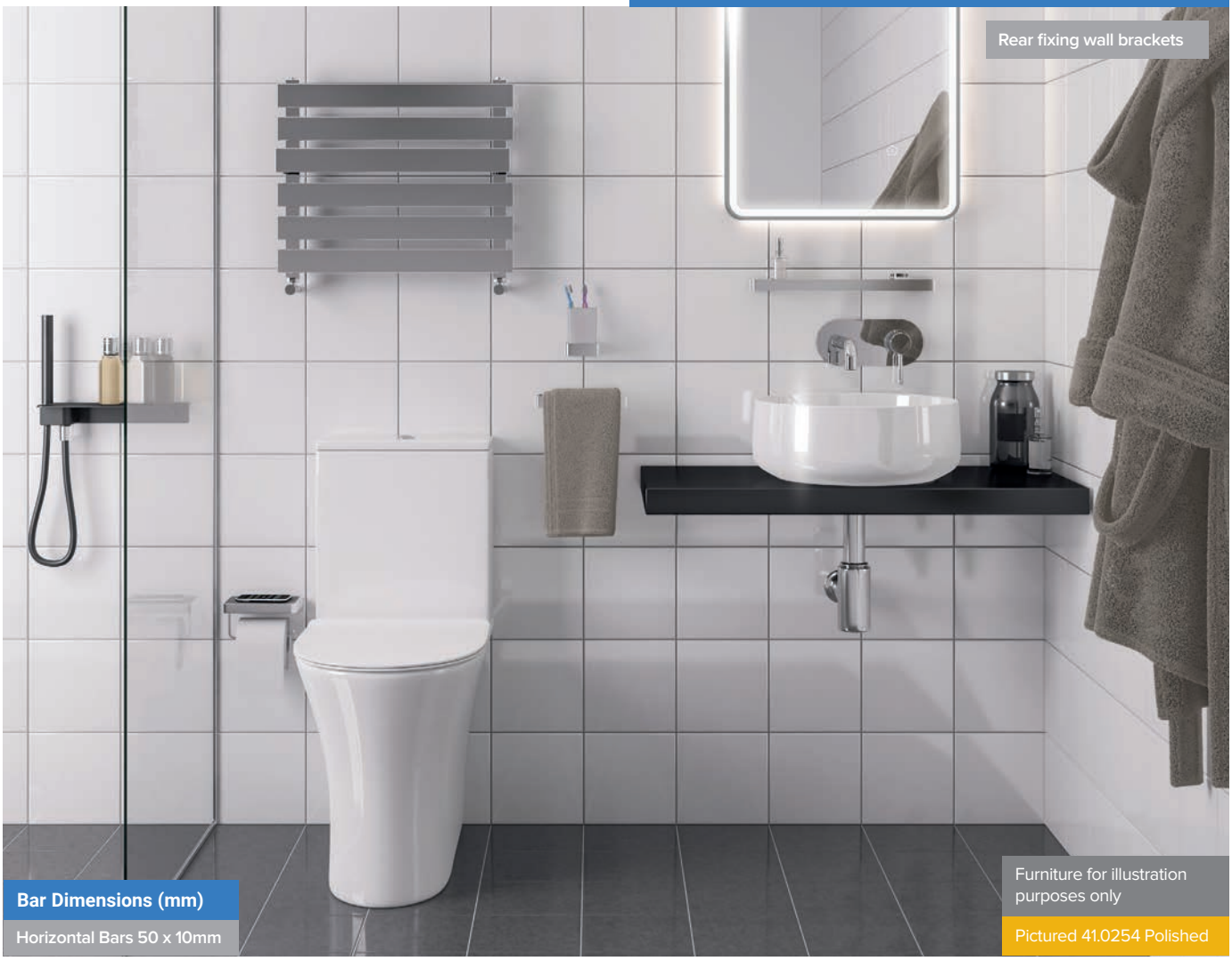



This sophisticated, ultra modern radiator adds a hugely useful feature with its single sided towel bars.

Ascona - Stainless Steel Polished

Size H x W	Watts	BTU	Element Output	Element Type	Code	€ Ex VAT	€ Inc VAT
420 x 500mm	280	955	150W	A, A+, D, E	41.0254	667.00	**820.41**

FEATURES

- Grade 304 Stainless Steel material
- Mirror polished surface (Chrome effect)
- Can be single, dual fuel or all electric
- Tested to BS EN 442 standards
- Rear fixing wall brackets
- Tappings only at the bottom, with hidden air vent at the back
- Flush finished tops
- 5 Year Manufacturer's Warranty*

* With conditions

Technical Tables & Drawings
Page 756-757

TECHNICAL INFORMATION

All measurements in Height by Width. Heat output based on ▲T60˚C. Radiators that are electric only are restricted to the heat output of the elements. Element size can be increased to full capacity of rail if using element type E. For element types see pages 718-729. For matching valves see pages 731-737. For direct & indirect heating systems. Tappings are approx. 60mm less than the width of the rail and approx. 45mm off the wall. Price includes radiator and wall fixing sets, valves extra. Maximum working pressure: 4 bars.

Warranty 5 Year | Heating | All Electric | Dual-Fuel



Sub Section

Designer Range

Our aim is to offer a statement piece radiator that allows maximum space to keep towels warm. In the designer range you can find a huge variety of towel rail styles and radiators using minimalistic, clean designs.

Contents

Leonardo, Chrome & Brushed Brass - **NEW COLOUR**	534
Staverton Tube on Tube Straight, Available in 3 colours - **NEW COLOUR**	535
Staverton Tube on Tube Curved, Chrome	536
Biava Corinium, Chrome	537
Defford, Available in 5 colours	538-539
Staverton, Available in 3 colours - **NEW COLOUR**	540
Mezzo Tondo, Chrome	541
Pesaro, Chrome	541
Santero, Available in 4 colours	542-543
Hurley, Available in 6 colours - **NEW COLOUR & NEW SIZES**	544-545
Helmsley, Available in 4 colours	546-547
Platani, Available in 5 colours	548-549
Reinbach, Available in 5 colours	550-551
Marlow, Available in 5 colours	552-553
Marlow E-Style, Available in 5 colours	554-555
Lambourne, Available in 4 colours - **NEW PRODUCT**	556-557
Murano Vertical & Horizontal, Available in 4 colours	558-559
Ryton, Available in 3 colours	560-561
Kenilworth, Available in 3 colours	562-563
Loxley, Available in 3 colours	564
Eshton, Available in 3 colours	565
Rubano Vertical & Horizontal, Gloss White & Matt Anthracite	566-567
Rowsham Vertical & Horizontal, Matt White & Matt Anthracite	568-570
Rowsham Towel Rail, Matt White & Matt Anthracite	571
Tunstall Vertical, Available in 4 colours - **NEW SIZES**	572-573
Tunstall Horizontal, Available in 3 colours - **NEW SIZES**	574
Tunstall Towel Rail, Available in 4 colours	575
Tunstall Double Vertical, Available in 3 colours - **NEW COLOUR & NEW SIZES**	576
Tunstall Double Horizontal, Available in 3 colours - **NEW COLOUR & NEW SIZES**	577
Tunstall Double Towel Rail, Available in 3 colours - **NEW COLOUR**	578
Tunstall Mirror & Doube Mirror, Available in 3 colours - **NEW COLOUR**	579
Deddington Vertical, Available in 5 colours	580-581
Deddington Horizontal, Available in 5 colours	582-583
Deddington Towel Rail, Available in 5 colours	584-585
Addington Type10, Gloss White & Matt Anthracite	586-589
Addington Type10 Towel Rail, Gloss White & Matt Anthracite	590
Addington Type10 Towel Hangers	591
Addington Type20, Gloss White & Matt Anthracite	592-595
Addington Type21 Horizontal, Gloss White & Matt Anthracite	596
Addington Type22 Horizontal, Gloss White & Matt Anthracite	597
Addington Type20 Towel Rail, Gloss White & Matt Anthracite	598
Addington Type21 Towel Rail, Gloss White & Matt Anthracite	599

Designer Range

LEONARDO

Including new colour



Pictured 41.0261 Chrome

Can be reverse handed (Left or Right)

The single sided pipes on this wonderfully stylish Leonardo rail allows maximium hanging space.

FEATURES
- 42 x 14mm. horizontal bars
- Tested to BS EN 442 standards
- 5 Year manufacturer's warranty*
- Can be reverse handed (left or right)
- Can be single or dual fuel, or all electric

* With conditions

Technical Tables & Drawings
Page 756-757

Bar Dimensions (mm)

Horizontal Bars 42 x 14mm

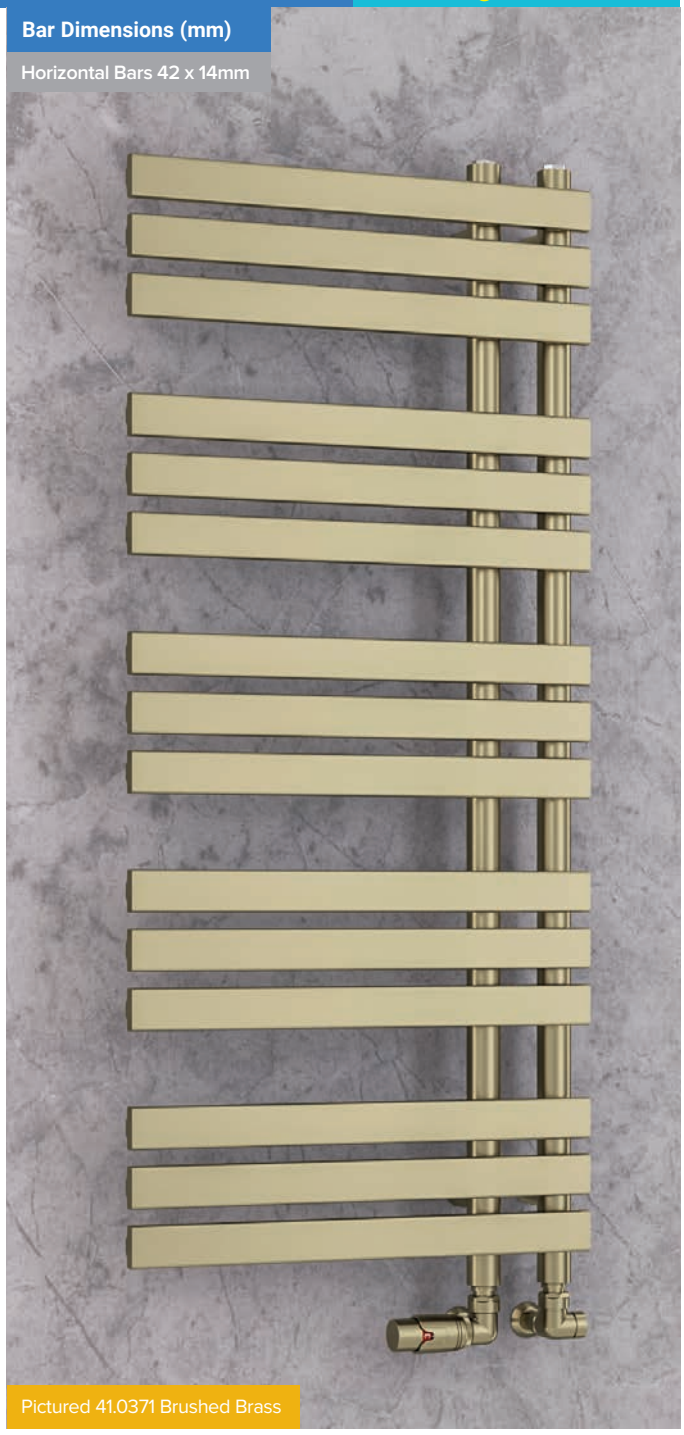

Pictured 41.0371 Brushed Brass

Leonardo - Chrome

Size H x W	Watts	BTU	Element Output	Element Type	Code	€ Ex VAT	€ Inc VAT
600 x 400mm	244	833	150W	A, A+, D, E, F, G	41.0255	381.00	**468.63**
600 x 500mm	288	983	150W	A, A+, D, E, F, G	41.0258	413.00	**507.99**
600 x 600mm	332	1133	150W	A, A+, D, E, F, G	41.0263	451.00	**554.73**
688 x 500mm	324	1105	150W	A, A+, D, E, F, G	41.0261	430.00	**528.90**
1200 x 400mm	465	1587	150W	A, A+, D, E, F, G	41.0256	642.00	**789.66**
1200 x 500mm	548	1870	300W	A, A+, D, E, F, G	41.0259	712.00	**875.76**
1200 x 600mm	631	2153	300W	A, A+, D, E, F, G	41.0264	773.00	**950.79**
1450 x 500mm	658	2245	300W	A, A+, D, E, F, G	41.0262	836.00	**1028.28**
1800 x 400mm	665	2269	300W	A, A+, D, E, F, G	41.0257	894.00	**1099.62**
1800 x 500mm	780	2661	450W	A, A+, D, E, F, G	41.0260	985.00	**1211.55**
1800 x 600mm	896	3057	450W	A, A+, D, E, F, G	41.0265	1076.00	**1323.48**

Leonardo - Brushed Brass *New Colour*

Size H x W	Watts	BTU	Element Output	Element Type	Code	€ Ex VAT	€ Inc VAT
1200 x 500mm*	548	1870	300W	A, A+, D, E, F, G	41.0371	951.00	**1169.73**
1200 x 600mm*	631	2153	300W	A, A+, D, E, F, G	41.0372	1027.00	**1263.21**

* Available February 2023.

TECHNICAL INFORMATION

All measurements in Height by Width. Heat output based on ▲T60˚C. Radiators that are electric only are restricted to the heat output of the elements. Element size can be increased to full capacity of rail if using element type D, E, F or G. For element types see pages 718-729. For matching valves see pages 731-737. For indirect heating systems only. Tappings are approx. 82mm and approx. 65mm off the wall. Price includes radiator and wall fixing sets, valves extra.

Brushed Brass colour shown in images are subject to the limitations of the printing process and may appear different.

Designer Range

Including new colour

STAVERTON - TUBE ON TUBE - STRAIGHT



Pictured 41.0334 Chrome



Pictured 41.0375 Brushed Brass

Bar Dimensions (mm)

Horizontal Bars 68 x 12mm

The Staverton Tube on Tube takes the design one step further with a higher output.

Staverton - Tube on Tube - Straight Gloss White

Size H x W	Watts	BTU	Element Output	Element Type	Code	€ Ex VAT	€ Inc VAT
600 x 400mm	364	1242	150W	A, A+, D, E, F, G	41.0190	308.00	**378.84**
600 x 500mm	432	1474	150W	A, A+, D, E, F, G	41.0193	335.00	**412.05**
600 x 600mm	500	1706	300W	A, A+, D, E, F, G	41.0196	364.00	**447.72**
1200 x 400mm	651	2221	300W	A, A+, D, E, F, G	41.0191	496.00	**610.08**
1200 x 500mm	766	2614	450W	A, A+, D, E, F, G	41.0194	516.00	**634.68**
1200 x 600mm	883	3013	450W	A, A+, D, E, F, G	41.0197	566.00	**696.18**
1800 x 400mm	1014	3460	600W	A, A+, D, E, F, G	41.0192	713.00	**876.99**
1800 x 500mm	1198	4088	600W	A, A+, D, E, F, G	41.0195	749.00	**921.27**
1800 x 600mm	1382	4715	750W	A, A+, D, E, F, G	41.0198	826.00	**1015.98**

Staverton - Tube on Tube - Brushed Brass New Colour

Size H x W	Watts	BTU	Element Output	Element Type	Code	€ Ex VAT	€ Inc VAT
1200 x 500mm*	606	2068	300W	A, A+, D, E, F, G	41.0375	1190.00	**1463.70**
1200 x 600mm*	697	2378	300W	A, A+, D, E, F, G	41.0376	1288.00	**1584.24**

* Available February 2023.

FEATURES

- 68 x 12mm. horizontal bars
- Rear fixing wall brackets
- Tested to BS EN 442 standards
- 5 Year manufacturer's warranty*
- Can be single or dual fuel, or all electric

* With conditions

Technical Tables & Drawings

Page 758-759

Staverton - Tube on Tube - Straight Chrome

Size H x W	Watts	BTU	Element Output	Element Type	Code	€ Ex VAT	€ Inc VAT
600 x 400mm	288	983	150W	A, A+, D, E, F, G	41.0181	534.00	**656.82**
600 x 500mm	340	1160	150W	A, A+, D, E, F, G	41.0184	583.00	**717.09**
600 x 600mm	394	1344	150W	A, A+, D, E, F, G	41.0187	635.00	**781.05**
600 x 1000mm	603	2057	300W	A, A+, D, E, F, G	41.0333	783.00	**963.09**
600 x 1200mm	710	2423	300W	A, A+, D, E, F, G	41.0334	810.00	**996.30**
800 x 1000mm	779	2658	450W	A, A+, D, E, F, G	41.0335	903.00	**1110.69**
800 x 1200mm	916	3125	450W	A, A+, D, E, F, G	41.0336	1021.00	**1255.83**
1200 x 400mm	514	1754	300W	A, A+, D, E, F, G	41.0182	913.00	**1122.99**
1200 x 500mm	606	2068	300W	A, A+, D, E, F, G	41.0185	961.00	**1182.03**
1200 x 600mm	697	2378	300W	A, A+, D, E, F, G	41.0188	1053.00	**1295.19**
1800 x 400mm	802	2736	450W	A, A+, D, E, F, G	41.0183	1277.00	**1570.71**
1800 x 500mm	946	3228	450W	A, A+, D, E, F, G	41.0186	1346.00	**1655.58**
1800 x 600mm	1092	3726	600W	A, A+, D, E, F, G	41.0189	1571.00	**1932.33**

TECHNICAL INFORMATION

All measurements in Height by Width. Heat output based on ▲T60˚C. Radiators that are electric only are restricted to the heat output of the elements. Element size can be increased to full capacity of rail if using element type D, E, F or G. For element types see pages 718-729. For matching valves see pages 731-737. For indirect heating systems only. Tappings are approx. 50mm less than the width of the rail and approx. 65mm off the wall. Price includes radiator and wall fixing sets, valves extra.

Brushed Brass colour shown in images are subject to the limitations of the printing process and may appear different.

Designer Range

STAVERTON - TUBE ON TUBE - CURVED

Bar Dimensions (mm)

Horizontal Bars 42 x 14mm



Pictured 41.0234 Chrome

Rear fixing wall brackets

Staverton - Tube on Tube - Curved Chrome

Size H x W	Watts	BTU	Element Output	Element Type	Code	€ Ex VAT	€ Inc VAT
600 x 500mm	328	1119	150W	A, A+, D, E, F, G	41.0232	516.00	**634.68**
600 x 600mm	378	1290	150W	A, A+, D, E, F, G	41.0233	566.00	**696.18**
1200 x 500mm	628	2143	300W	A, A+, D, E, F, G	41.0234	903.00	**1110.69**
1200 x 600mm	722	2463	450W	A, A+, D, E, F, G	41.0235	990.00	**1217.70**
1800 x 500mm	928	3166	450W	A, A+, D, E, F, G	41.0236	1283.00	**1578.09**
1800 x 600mm	1067	3641	600W	A, A+, D, E, F, G	41.0237	1413.00	**1737.99**

FEATURES

- 42 x 14mm. horizontal bars
- Rear fixing wall brackets
- Tested to BS EN 442 standards
- 5 Year manufacturer's warranty*
- Can be single or dual fuel, or all electric

* With conditions

Technical Tables & Drawings
Page 758-759

TECHNICAL INFORMATION

All measurements in Height by Width. Heat output based on ▲T60˚C. Radiators that are electric only are restricted to the heat output of the elements. Element size can be increased to full capacity of rail if using element type D, E, F or G. For element types see pages 718-729. For matching valves see pages 731-737. For indirect heating systems only. Tappings are approx. 45mm less than the width of the rail and approx. 65mm off the wall. Price includes radiator and wall fixing sets, valves extra.

Warranty 5 Year | Heating | All Electric | Dual-Fuel



Pictured 41.0234 Chrome

Designer Range

BIAVA CORINIUM



Technical Tables & Drawings
Page 758-759

Pictured 41.0224 Chrome



Pictured 41.0224 Chrome

The Corinium rail is a contemporary unique design with a practical built in heated towel rail shelf at the top for stacking those larger towels. It's projection from the wall is 225mm.

Biava Corinium - Chrome

Size H x W	Watts	BTU	Element Output	Element Type	Code	€ Ex VAT	€ Inc VAT
1200 x 500mm	304	1037	150W	A, A+, C, E, H	41.0222	392.00	**482.16**
1200 x 600mm	330	1126	150W	A, A+, C, E, H	41.0224	408.00	**501.84**

FEATURES

- Tested to BS EN 442 standards
- 5 Year manufacturer's warranty*
- Can be single or dual fuel, or all electric

* With conditions

TECHNICAL INFORMATION

All measurements in Height by Width. Heat output based on ▲T60˚C. Radiators that are electric only are restricted to the heat output of the elements. Element size can be increased to full capacity of rail if using element type C, E or H. For element types see pages 718-729. For matching valves see pages 731-737. For indirect heating systems only. Tappings are approx. 100mm less than the width of the rail. Price includes radiator and wall fixing sets, valves extra. Projection from wall 225mm.

Warranty 5 Year | Heating | All Electric | Dual-Fuel

Designer Range

DEFFORD

Chrome



Pictured 89.1303 Chrome

Bar Dimensions (mm)

Horizontal Bars 40 x 10mm
Vertical Bars 40 x 30mm

Matt Black



Pictured 89.1294 Matt Black

Rear fixing metal wall brackets

Defford has been specifically designed to give maximum space for your towels and can produce enough warmth to heat a bathroom.

FEATURES

- 40 x 10mm. horizontal bars with 40 x 30mm. vertical D profile
- Tested to BS EN 442 standards
- Rear fixing metal wall brackets
- 5 colours available from stock
- 5 Year manufacturer's warranty*
- Can be single or dual fuel, or all electric

* With conditions



SWATCHES AVAILABLE

Warranty 5 Year

Heating

All Electric

Dual-Fuel

Designer Range

DEFFORD

Defford Towel Rail - Gloss White

Size H x W	Watts	BTU	Element Output	Element Type	Code	€ Ex VAT	€ Inc VAT
800 x 500mm	405	1382	150W	A, A+, D, E, F, G	89.1274	166.00	**204.18**
800 x 600mm	467	1594	150W	A, A+, D, E, F, G	89.1275	184.00	**226.32**
1200 x 500mm	603	2058	300W	A, A+, D, E, F, G	89.1276	262.00	**322.26**
1200 x 600mm	695	2372	300W	A, A+, D, E, F, G	89.1277	297.00	**365.31**
1800 x 500mm	892	3044	450W	A, A+, D, E, F, G	89.1278	367.00	**451.41**
1800 x 600mm	1029	3511	450W	A, A+, D, E, F, G	89.1279	404.00	**496.92**

Defford Towel Rail - Matt Grey

Size H x W	Watts	BTU	Element Output	Element Type	Code	€ Ex VAT	€ Inc VAT
800 x 500mm	405	1382	150W	A, A+, D, E, F, G	89.1280	166.00	**204.18**
800 x 600mm	467	1594	150W	A, A+, D, E, F, G	89.1281	184.00	**226.32**
1200 x 500mm	603	2058	300W	A, A+, D, E, F, G	89.1282	262.00	**322.26**
1200 x 600mm	695	2372	300W	A, A+, D, E, F, G	89.1283	297.00	**365.31**
1800 x 500mm	892	3044	450W	A, A+, D, E, F, G	89.1284	367.00	**451.41**
1800 x 600mm	1029	3511	450W	A, A+, D, E, F, G	89.1285	404.00	**496.92**

Defford Towel Rail - Chrome

Size H x W	Watts	BTU	Element Output	Element Type	Code	€ Ex VAT	€ Inc VAT
800 x 500mm	250	853	150W	A, A+, D, E, F, G	89.1298	243.00	**298.89**
800 x 600mm	286	976	150W	A, A+, D, E, F, G	89.1299	273.00	**335.79**
1200 x 500mm	371	1266	150W	A, A+, D, E, F, G	89.1300	429.00	**527.67**
1200 x 600mm	424	1447	150W	A, A+, D, E, F, G	89.1301	478.00	**587.94**
1800 x 500mm	555	1894	300W	A, A+, D, E, F, G	89.1302	615.00	**756.45**
1800 x 600mm	636	2171	300W	A, A+, D, E, F, G	89.1303	700.00	**861.00**

Defford Towel Rail - Matt Anthracite

Size H x W	Watts	BTU	Element Output	Element Type	Code	€ Ex VAT	€ Inc VAT
800x500mm	405	1382	150W	A, A+, D, E, F, G	89.1286	166.00	**204.18**
800x600mm	467	1594	150W	A, A+, D, E, F, G	89.1287	184.00	**226.32**
1200x500mm	603	2058	300W	A, A+, D, E, F, G	89.1288	262.00	**322.26**
1200x600mm	695	2372	300W	A, A+, D, E, F, G	89.1289	297.00	**365.31**
1800x500mm	892	3044	450W	A, A+, D, E, F, G	89.1290	367.00	**451.41**
1800x600mm	1029	3511	450W	A, A+, D, E, F, G	89.1291	404.00	**496.92**

Defford Towel Rail - Matt Black

Size H x W	Watts	BTU	Element Output	Element Type	Code	€ Ex VAT	€ Inc VAT
800x500mm	405	1382	150W	A, A+, D, E, F, G	89.1292	166.00	**204.18**
800x600mm	467	1594	150W	A, A+, D, E, F, G	89.1293	184.00	**226.32**
1200x500mm	603	2058	300W	A, A+, D, E, F, G	89.1294	262.00	**322.26**
1200x600mm	695	2372	300W	A, A+, D, E, F, G	89.1295	297.00	**365.31**
1800x500mm	892	3044	450W	A, A+, D, E, F, G	89.1296	367.00	**451.41**
1800x600mm	1029	3511	450W	A, A+, D, E, F, G	89.1297	404.00	**496.92**

D Shape Vent Caps
Page 741



TECHNICAL INFORMATION

All measurements in Height by Width. Heat output based on ▲T60˚C. Radiators that are electric only are restricted to the heat output of the elements. Element size can be increased to full capacity of rail if using element type D, E, F or G. For element types see pages 718-729. For matching valves see pages 731-737. For indirect heating systems only. Tappings are approx. 45mm less than the width of the rail and approx. 80mm off the wall. Price includes radiator and wall fixing sets, valves extra.

Technical Tables & Drawings
Page 758-759

Gloss White



Matt Grey



Chrome



Matt Anthracite



Matt Black





Designer Range

STAVERTON

Including new colour



Pictured 41.0373 Brushed Brass



Pictured 41.0131 Chrome

Bar Dimensions (mm)

Horizontal Bars 42 x 14mm
Vertical Bars 40 x 30mm

A modern style towel rail with horizontal flat bars, that still allows maximum space for keeping your towels warm.

FEATURES
- 42 x 14mm. horizontal bars
- Tested to BS EN 442 standards
- 5 Year manufacturer's warranty*
- Comes in chrome, brushed brass or white finish
- Can be single or dual fuel, or all electric

* With conditions

Technical Tables & Drawings
Page 760-761

Staverton - Brushed Brass *New Colour*

Size H x W	Watts	BTU	Element Output	Element Type	Code	€ Ex VAT	€ Inc VAT
1200 x 500mm*	523	1784	300W	A, A+, D, E, F, G	41.0373	797.00	**980.31**
1200 x 600mm*	611	2085	300W	A, A+, D, E, F, G	41.0374	859.00	**1056.57**

*Available February 2023

Staverton - Gloss White

Size H x W	Watts	BTU	Element Output	Element Type	Code	€ Ex VAT	€ Inc VAT
600 x 400mm	276	942	150W	A, A+, D, E, F, G	41.0136	167.00	**205.41**
600 x 500mm	332	1133	150W	A, A+, D, E, F, G	41.0139	181.00	**222.63**
600 x 600mm	388	1324	150W	A, A+, D, E, F, G	41.0142	195.00	**239.85**
1200 x 400mm	552	1883	300W	A, A+, D, E, F, G	41.0137	271.00	**333.33**
1200 x 500mm	665	2269	300W	A, A+, D, E, F, G	41.0140	289.00	**355.47**
1200 x 600mm	776	2648	450W	A, A+, D, E, F, G	41.0143	318.00	**391.14**
1800 x 400mm	829	2829	450W	A, A+, D, E, F, G	41.0138	373.00	**458.79**
1800 x 500mm	996	3398	600W	A, A+, D, E, F, G	41.0141	406.00	**499.38**
1800 x 600mm	1164	3972	600W	A, A+, D, E, F, G	41.0144	446.00	**548.58**

Staverton - Chrome

Size H x W	Watts	BTU	Element Output	Element Type	Code	€ Ex VAT	€ Inc VAT
600 x 400mm	217	740	100W	A, A+, D, E, F, G	41.0127	286.00	**351.78**
600 x 500mm	261	891	150W	A, A+, D, E, F, G	41.0130	331.00	**407.13**
600 x 600mm	305	1041	150W	A, A+, D, E, F, G	41.0133	343.00	**421.89**
1200 x 400mm	435	1484	150W	A, A+, D, E, F, G	41.0128	496.00	**610.08**
1200 x 500mm	523	1784	300W	A, A+, D, E, F, G	41.0131	549.00	**675.27**
1200 x 600mm	611	2085	300W	A, A+, D, E, F, G	41.0134	601.00	**739.23**
1800 x 400mm	652	2225	300W	A, A+, D, E, F, G	41.0129	705.00	**867.15**
1800 x 500mm	784	2675	450W	A, A+, D, E, F, G	41.0132	780.00	**959.40**
1800 x 600mm	916	3125	450W	A, A+, D, E, F, G	41.0135	866.00	**1065.18**

TECHNICAL INFORMATION

All measurements in Height by Width. Heat output based on ▲T60˚C. Radiators that are electric only are restricted to the heat output of the elements. Element size can be increased to full capacity of rail if using element type D, E, F or G. For element types see pages 718-729. For matching valves see pages 731-737. For indirect heating systems only. Tappings are approx. 45mm less than the width of the rail and approx. 70mm off the wall. Price includes radiator and wall fixing sets, valves extra.

Round Vent Caps
Page 741



Designer Range

MEZZO TONDO



Pictured 41.0248 Chrome

The curves on this rail allow maximum space for the whole family to warm towels easily, without compromising on space in the room due to the slimline design.

Mezzo Tondo - Chrome

Size H x W	Watts	BTU	Element Output	Element Type	Code	€ Ex VAT	€ Inc VAT
1600 x 320mm Chrome	574	1958	N/A	N/A	41.0248	642.00	**789.66**

FEATURES
- Tested to BS EN 442 standards
- 5 Year manufacturer's warranty*
- Can be single or dual fuel, or all electric

* With conditions

TECHNICAL INFORMATION

All measurements in Height by Width. Heat output based on ▲T60˚C. Radiators that are electric only are restricted to the heat output of the elements. Element size can be increased to full capacity of rail if using element type D or E. For element types see pages 718-729. For matching valves see pages 731-737. For indirect heating systems only. Tappings are approx. 286mm and approx. 65mm off the wall. Price includes radiator and wall fixing sets, valves extra.

Round Vent Caps
Page 741



Warranty 5 Year | Heating

Technical Tables & Drawings
Page 760-761

PESARO

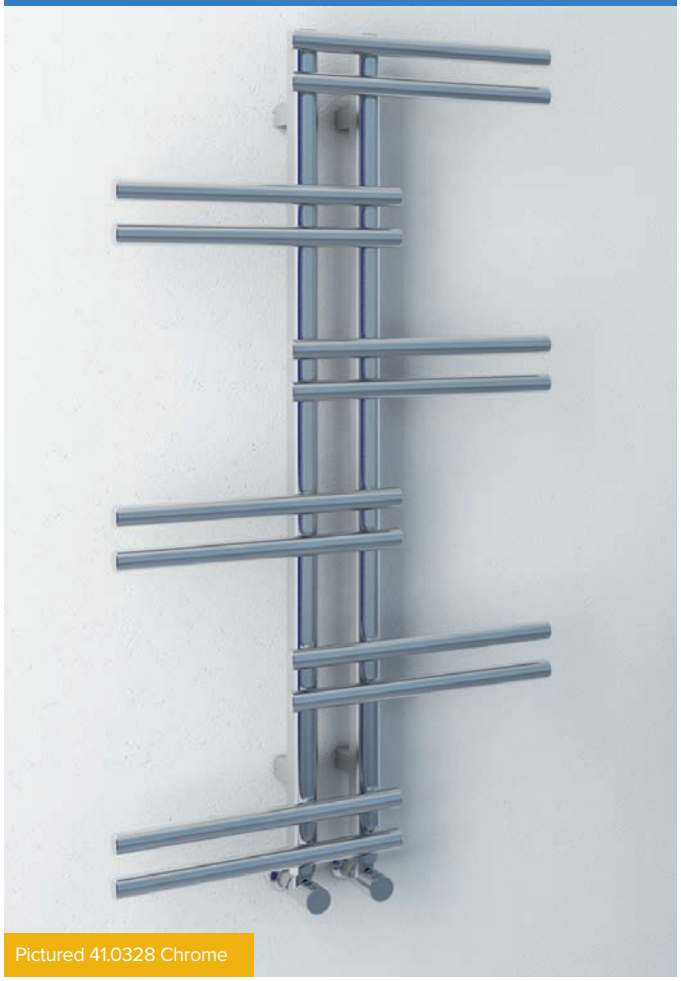

Pictured 41.0328 Chrome

A designer towel rail that allows the hanging of up to six towels at once. This statement piece has a unique design for those who want to make a bold statement.

Pesaro - Chrome

Size H x W	Watts	BTU	Element Output	Element Type	Code	€ Ex VAT	€ Inc VAT
1005 x 550mm	349	1191	150W	A, A+, D, E, F, G	41.0328	637.00	**783.51**

FEATURES
- Tested to BS EN 442 standards
- 5 Year manufacturer's warranty*
- Can be single or dual fuel, or all electric

* With conditions

TECHNICAL INFORMATION

All measurements in Height by Width. Heat output based on▲T60˚C. Radiators that are electric only are restricted to the heat output of the elements. Element size can be increased to full capacity of rail if using element type D, E, F or G. For element types see pages 718-729. For matching valves see pages 731-737. For indirect heating systems only. Tappings are approx. 80mm and approx. 65mm off the wall. Price includes radiator and wall fixing sets, valves extra.

Round Vent Caps
Page 741



Warranty 5 Year | Heating | All Electric | Dual-Fuel

Designer Range

SANTERO



Pictured 89.1327 Chrome

Bar Dimensions (mm)

Horizontal Bars 75 x 15mm
Vertical Bars 40 x 30mm



Pictured 89.1307 Gloss White

Rear fixing metal wall brackets

An admired design in the Designer Range, Santero, has even wider horizontal flat bars than Defford or Staverton. Warmth has never been this easy to achieve. Grab your wet towels and use Santero Towel Rail to feel the constant warmth.

FEATURES

- 75 x 15mm. horizontal bars and 40 x 30mm. vertical D profiles
- Rear fixing metal wall brackets
- Tested to BS EN 442 standards
- 4 colours available from stock
- Can be single, dual fuel or all electric
- 5 Year Manufacturer's Warranty*

* With conditions



SWATCHES AVAILABLE

Technical Tables & Drawings

Page 760-761

Designer Range

SANTERO

Santero Towel Rail - Gloss White							
Size H x W	Watts	BTU	Element Output	Element Type	Code	€ Ex VAT	€ Inc VAT
800 x 500mm	430	1468	150W	A, A+, D, E, F, G	89.1304	321.00	**394.83**
800 x 600mm	509	1737	150W	A, A+, D, E, F, G	89.1305	377.00	**463.71**
1200 x 500mm	633	2160	300W	A, A+, D, E, F, G	89.1306	415.00	**510.45**
1200 x 600mm	749	2556	300W	A, A+, D, E, F, G	89.1307	485.00	**596.55**
1800 x 500mm	932	3180	450W	A, A+, D, E, F, G	89.1308	574.00	**706.02**
1800 x 600mm	1104	3767	450W	A, A+, D, E, F, G	89.1309	671.00	**825.33**

Santero Towel Rail - Matt Black							
Size H x W	Watts	BTU	Element Output	Element Type	Code	€ Ex VAT	€ Inc VAT
800 x 500mm	430	1468	150W	A, A+, D, E, F, G	89.1316	321.00	**394.83**
800 x 600mm	509	1737	150W	A, A+, D, E, F, G	89.1317	377.00	**463.71**
1200 x 500mm	633	2160	300W	A, A+, D, E, F, G	89.1318	415.00	**510.45**
1200 x 600mm	749	2556	300W	A, A+, D, E, F, G	89.1319	485.00	**596.55**
1800 x 500mm	932	3180	450W	A, A+, D, E, F, G	89.1320	574.00	**706.02**
1800 x 600mm	1104	3767	450W	A, A+, D, E, F, G	89.1321	671.00	**825.33**

Santero Towel Rail - Matt Anthracite							
Size H x W	Watts	BTU	Element Output	Element Type	Code	€ Ex VAT	€ Inc VAT
800 x 500mm	430	1468	150W	A, A+, D, E, F, G	89.1310	321.00	**394.83**
800 x 600mm	509	1737	150W	A, A+, D, E, F, G	89.1311	377.00	**463.71**
1200 x 500mm	633	2160	300W	A, A+, D, E, F, G	89.1312	415.00	**510.45**
1200 x 600mm	749	2556	300W	A, A+, D, E, F, G	89.1313	485.00	**596.55**
1800 x 500mm	932	3180	450W	A, A+, D, E, F, G	89.1314	574.00	**706.02**
1800 x 600mm	1104	3767	450W	A, A+, D, E, F, G	89.1315	671.00	**825.33**

Santero Towel Rail - Chrome							
Size H x W	Watts	BTU	Element Output	Element Type	Code	€ Ex VAT	€ Inc VAT
800 x 500mm	249	850	150W	A, A+, D, E, F, G	89.1322	432.00	**531.36**
800 x 600mm	289	987	150W	A, A+, D, E, F, G	89.1323	504.00	**619.92**
1200 x 500mm	373	1273	150W	A, A+, D, E, F, G	89.1324	523.00	**643.29**
1200 x 600mm	434	1481	150W	A, A+, D, E, F, G	89.1325	612.00	**752.76**
1800 x 500mm	551	1881	300W	A, A+, D, E, F, G	89.1326	707.00	**869.61**
1800 x 600mm	641	2188	300W	A, A+, D, E, F, G	89.1327	829.00	**1019.67**

TECHNICAL INFORMATION

All measurements in Height by Width. Heat output based on ▲T60˚C. Radiators that are electric only are restricted to the heat output of the elements. Element size can be increased to full capacity of rail if using element type D, E, F or G. For element types see pages 718-729. For matching valves see pages 731-737. For indirect heating systems only. Tappings are approx. 45mm less than the width of the rail and approx. 80mm off the wall. Price includes radiator and wall fixing sets, valves extra.

Gloss White



Matt Anthracite



Matt Black



Chrome







Radiator Valves
Page 731-737



D Shape Vent Caps
Page 741

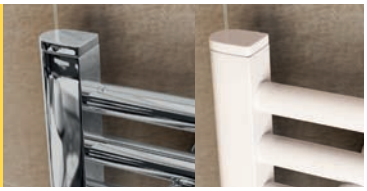

Designer Range

HURLEY

Including new sizes & new colour

Chrome



Pictured 89.0568 Chrome

Bar Dimensions (mm)

Horizontal Bars 40 x 10mm
Vertical Bars 30 x 30mm

Matt Anthracite

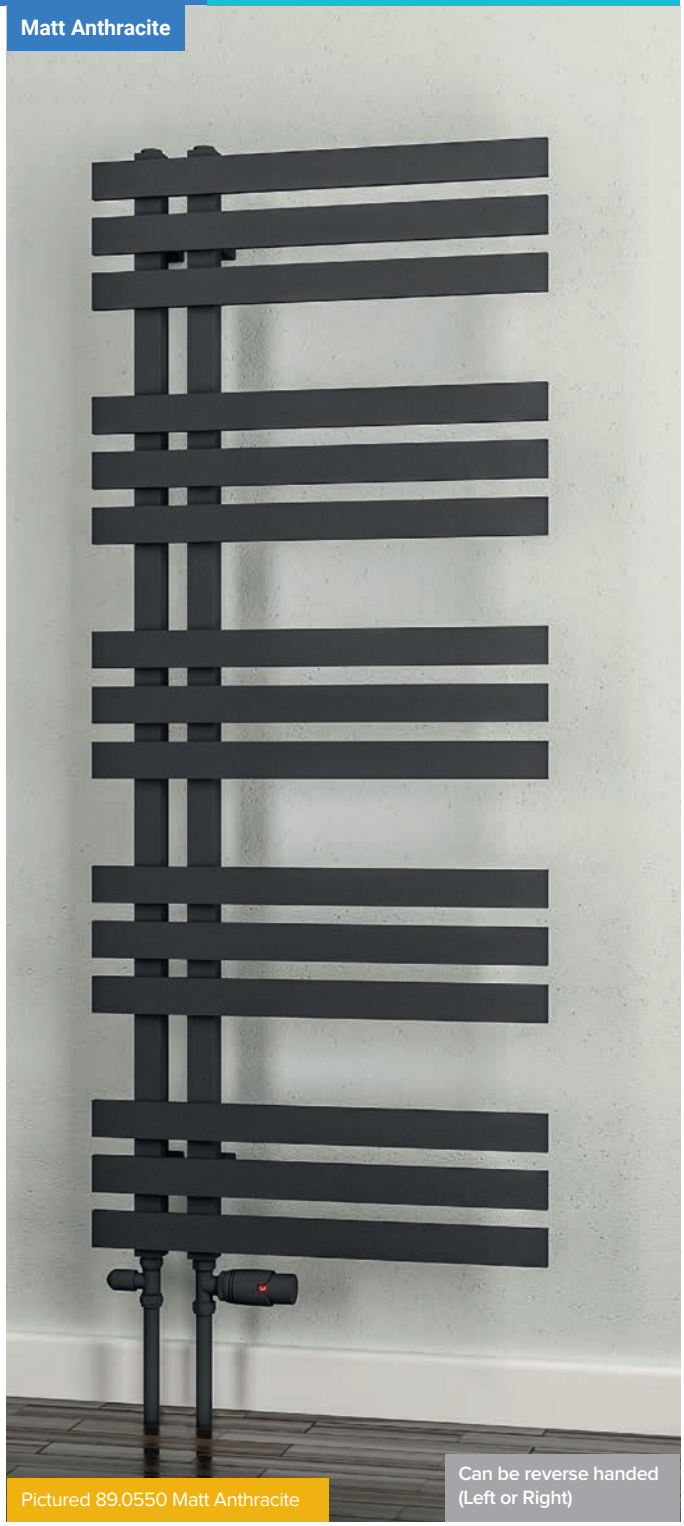

Pictured 89.0550 Matt Anthracite

Can be reverse handed (Left or Right)

A modern, versatile towel rail. Available in 6 colours with reversible installation possibility.

FEATURES

- 40 x 10mm. horizontal bars and 30 x 30mm. vertical profiles
- Rear fixing metal wall brackets
- Tested to BS EN 442 standards
- 6 colours available from stock
- Can be reverse handed (left or right)
- Can be single, dual fuel or all electric
- 5 Year Manufacturer's Warranty*

* With conditions



SWATCHES AVAILABLE

Warranty 5 Year

Heating

All Electric

Dual-Fuel

Designer Range

Including new sizes & new colour

HURLEY

Hurley Towel Rail - Matt White — New Sizes

Size H x W	Watts	BTU	Element Output	Element Type	Code	€ Ex VAT	€ Inc VAT
800 x 500mm	368	1256	150W	A, A+, D, E, F, G	89.0542	343.00	**421.89**
800 x 600mm	414	1413	150W	A, A+, D, E, F, G	89.0543	388.00	**477.24**
1000 x 500mm	460	1570	150W	A, A+, D, E, F, G	89.1717	420.00	**516.60**
1000 x 600mm	517	1765	150W	A, A+, D, E, F, G	89.1718	471.00	**579.33**
1200 x 500mm	551	1881	300W	A, A+, D, E, F, G	89.0544	475.00	**584.25**
1200 x 600mm	619	2113	300W	A, A+, D, E, F, G	89.0545	531.00	**653.13**
1500 x 500mm	684	2334	300W	A, A+, D, E, F, G	89.1729	551.00	**677.73**
1500 x 600mm	768	2621	300W	A, A+, D, E, F, G	89.1730	615.00	**756.45**
1800 x 500mm	813	2774	450W	A, A+, D, E, F, G	89.0546	604.00	**742.92**
1800 x 600mm	913	3116	450W	A, A+, D, E, F, G	89.0547	675.00	**830.25**

Hurley Towel Rail - Matt Grey — New Sizes

Size H x W	Watts	BTU	Element Output	Element Type	Code	€ Ex VAT	€ Inc VAT
800 x 500mm	368	1256	150W	A, A+, D, E, F, G	89.0554	343.00	**421.89**
800 x 600mm	414	1413	150W	A, A+, D, E, F, G	89.0555	388.00	**477.24**
1000 x 500mm	460	1570	150W	A, A+, D, E, F, G	89.1719	420.00	**516.60**
1000 x 600mm	517	1765	150W	A, A+, D, E, F, G	89.1720	471.00	**579.33**
1200 x 500mm	551	1881	300W	A, A+, D, E, F, G	89.0556	475.00	**584.25**
1200 x 600mm	619	2113	300W	A, A+, D, E, F, G	89.0557	531.00	**653.13**
1500 x 500mm	684	2334	300W	A, A+, D, E, F, G	89.1731	551.00	**677.73**
1500 x 600mm	768	2621	300W	A, A+, D, E, F, G	89.1732	615.00	**756.45**
1800 x 500mm	813	2774	450W	A, A+, D, E, F, G	89.0558	604.00	**742.92**
1800 x 600mm	913	3116	450W	A, A+, D, E, F, G	89.0559	675.00	**830.25**

Hurley Towel Rail - Matt Black — New Colour

Size H x W	Watts	BTU	Element Output	Element Type	Code	€ Ex VAT	€ Inc VAT
800 x 500mm	368	1256	150W	A, A+, D, E, F, G	89.1711	343.00	**421.89**
800 x 600mm	414	1413	150W	A, A+, D, E, F, G	89.1712	388.00	**477.24**
1000 x 500mm	460	1570	150W	A, A+, D, E, F, G	89.1725	420.00	**516.60**
1000 x 600mm	517	1765	150W	A, A+, D, E, F, G	89.1726	471.00	**579.33**
1200 x 500mm	551	1881	300W	A, A+, D, E, F, G	89.1713	475.00	**584.25**
1200 x 600mm	619	2113	300W	A, A+, D, E, F, G	89.1714	531.00	**653.13**
1500 x 500mm	684	2334	300W	A, A+, D, E, F, G	89.1737	551.00	**677.73**
1500 x 600mm	768	2621	300W	A, A+, D, E, F, G	89.1738	615.00	**756.45**
1800 x 500mm	813	2774	450W	A, A+, D, E, F, G	89.1715	604.00	**742.92**
1800 x 600mm	913	3116	450W	A, A+, D, E, F, G	89.1716	675.00	**830.25**

Hurley Towel Rail - Matt Anthracite — New Sizes

Size H x W	Watts	BTU	Element Output	Element Type	Code	€ Ex VAT	€ Inc VAT
800x500mm	368	1256	150W	A, A+, D, E, F, G	89.0548	343.00	**421.89**
800x600mm	414	1413	150W	A, A+, D, E, F, G	89.0549	388.00	**477.24**
1000 x 500mm	460	1570	150W	A, A+, D, E, F, G	89.1723	420.00	**516.60**
1000 x 600mm	517	1765	150W	A, A+, D, E, F, G	89.1724	471.00	**579.33**
1200x500mm	551	1881	300W	A, A+, D, E, F, G	89.0550	475.00	**584.25**
1200x600mm	619	2113	300W	A, A+, D, E, F, G	89.0551	531.00	**653.13**
1500 x 500mm	684	2334	300W	A, A+, D, E, F, G	89.1735	551.00	**677.73**
1500 x 600mm	768	2621	300W	A, A+, D, E, F, G	89.1736	615.00	**756.45**
1800x500mm	813	2774	450W	A, A+, D, E, F, G	89.0552	604.00	**742.92**
1800x600mm	913	3116	450W	A, A+, D, E, F, G	89.0553	675.00	**830.25**

Hurley Towel Rail - Matt Cappucino — New Sizes

Size H x W	Watts	BTU	Element Output	Element Type	Code	€ Ex VAT	€ Inc VAT
800x500mm	368	1256	150W	A, A+, D, E, F, G	89.0560	378.00	**464.94**
800x600mm	414	1413	150W	A, A+, D, E, F, G	89.0561	422.00	**519.06**
1000 x 500mm	460	1570	150W	A, A+, D, E, F, G	89.1721	420.00	**516.60**
1000 x 600mm	517	1765	150W	A, A+, D, E, F, G	89.1722	471.00	**579.33**
1200x500mm	551	1881	300W	A, A+, D, E, F, G	89.0562	518.00	**637.14**
1200x600mm	619	2113	300W	A, A+, D, E, F, G	89.0563	581.00	**714.63**
1500 x 500mm	684	2334	300W	A, A+, D, E, F, G	89.1733	551.00	**677.73**
1500 x 600mm	768	2621	300W	A, A+, D, E, F, G	89.1734	615.00	**756.45**
1800x500mm	813	2774	450W	A, A+, D, E, F, G	89.0564	661.00	**813.03**
1800x600mm	913	3116	450W	A, A+, D, E, F, G	89.0565	740.00	**910.20**

Hurley Towel Rail - Chrome — New Sizes

Size H x W	Watts	BTU	Element Output	Element Type	Code	€ Ex VAT	€ Inc VAT
800 x 500mm	239	816	150W	A, A+, D, E, F, G	89.0566	436.00	**536.28**
800 x 600mm	268	915	150W	A, A+, D, E, F, G	89.0567	489.00	**601.47**
1000 x 500mm	298	1017	100W	A, A+, D, E, F, G	89.1727	527.00	**648.21**
1000 x 600mm	334	1140	100W	A, A+, D, E, F, G	89.1728	590.00	**725.70**
1200 x 500mm	356	1215	150W	A, A+, D, E, F, G	89.0568	604.00	**742.92**
1200 x 600mm	399	1362	150W	A, A+, D, E, F, G	89.0569	675.00	**830.25**
1500 x 500mm	441	1505	150W	A, A+, D, E, F, G	89.1739	730.00	**897.90**
1500 x 600mm	494	1686	150W	A, A+, D, E, F, G	89.1740	815.00	**1002.45**
1800 x 500mm	522	1782	300W	A, A+, D, E, F, G	89.0570	835.00	**1027.05**
1800 x 600mm	585	1997	300W	A, A+, D, E, F, G	89.0571	931.00	**1145.13**

TECHNICAL INFORMATION

All measurements in Height by Width. Heat output based on ▲T60˚C. Radiators that are electric only are restricted to the heat output of the elements. Element size can be increased to full capacity of rail if using element type D, E, F or G. For element types see pages 718-729. For matching valves see pages 731-737. For indirect heating systems only. Tappings are approx. 60mm and approx. 79mm off the wall. Price includes radiator and wall fixing sets, valves extra.

Technical Tables & Drawings
Page 762-763



Matt White



Matt Grey

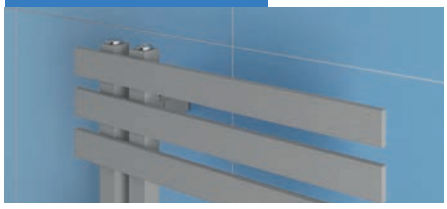

Matt Black



Matt Anthracite



Matt Cappuccino



Chrome

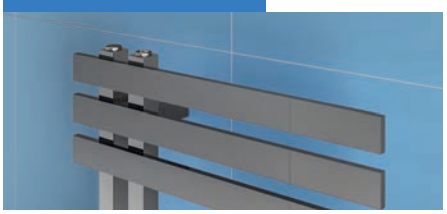

Designer Range

HELMSLEY



Pictured 89.0637 Matt Anthracite

Bar Dimensions (mm)

Horizontal Bars 70 x 11mm
Vertical Bars 30 x 30mm

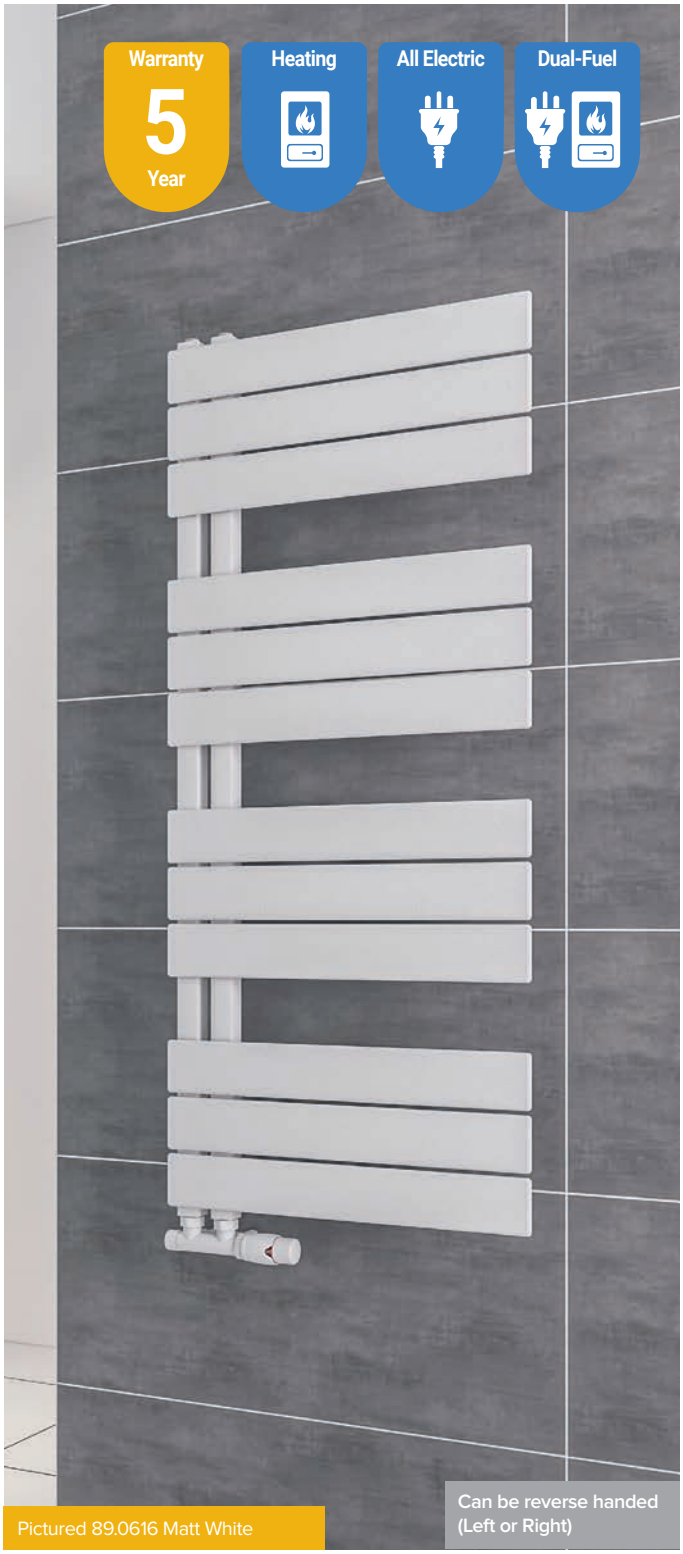

Pictured 89.0616 Matt White

Can be reverse handed (Left or Right)

One of the most popular models in the Designer Range. Available in a variety of colours to suit any bathroom. The generous surface area of the horizontal bars will let you experience the warmth. Helmsley is also reversible whilst fitting on the wall.

FEATURES

- 72 x 11mm. horizontal bars and 30 x 30mm. vertical profiles
- Rear fixing metal wall brackets
- Tested to BS EN 442 standards
- 4 colours available from stock
- Can be reverse handed (left or right)
- Can be single, dual fuel or all electric
- State-of-the-Art welding technology
- 5 Year Manufacturer's Warranty*

* With conditions



SWATCHES AVAILABLE

Round Vent Caps

Page 741



Designer Range

HELMSLEY

Helmsley Towel Rail - Matt White

Size H x W	Watts	BTU	Element Output	Element Type	Code	€ Ex VAT	€ Inc VAT
800 x 500mm	437	1492	300W	A, A+, D, E, F, G	89.0614	378.00	**464.94**
800 x 600mm	506	1727	300W	A, A+, D, E, F, G	89.0615	419.00	**649.44**
1150 x 500mm	607	2072	300W	A, A+, D, E, F, G	89.0616	523.00	**643.29**
1150 x 600mm	703	2399	450W	A, A+, D, E, F, G	89.0617	581.00	**714.63**
1400 x 500mm	736	2512	450W	A, A+, D, E, F, G	89.0618	567.00	**697.41**
1400 x 600mm	853	2911	600W	A, A+, D, E, F, G	89.0619	632.00	**777.36**
1640 x 500mm	869	2966	600W	A, A+, D, E, F, G	89.0620	614.00	**755.22**
1640 x 600mm	1007	3436	600W	A, A+, D, E, F, G	89.0621	688.00	**846.24**

Helmsley Towel Rail - Matt Grey

Size H x W	Watts	BTU	Element Output	Element Type	Code	€ Ex VAT	€ Inc VAT
800 x 500mm	437	1492	300W	A, A+, D, E, F, G	89.0622	378.00	**464.94**
800 x 600mm	506	1727	300W	A, A+, D, E, F, G	89.0623	419.00	**515.37**
1150 x 500mm	607	2072	300W	A, A+, D, E, F, G	89.0624	523.00	**643.29**
1150 x 600mm	703	2399	450W	A, A+, D, E, F, G	89.0625	581.00	**714.63**
1400 x 500mm	736	2512	450W	A, A+, D, E, F, G	89.0626	567.00	**697.41**
1400 x 600mm	853	2911	600W	A, A+, D, E, F, G	89.0627	632.00	**777.36**
1640 x 500mm	869	2966	600W	A, A+, D, E, F, G	89.0628	614.00	**755.22**
1640 x 600mm	1007	3436	600W	A, A+, D, E, F, G	89.0629	688.00	**846.24**

Helmsley Towel Rail - Matt Anthracite

Size H x W	Watts	BTU	Element Output	Element Type	Code	€ Ex VAT	€ Inc VAT
800 x 500mm	437	1492	300W	A, A+, D, E, F, G	89.0630	378.00	**464.94**
800 x 600mm	506	1727	300W	A, A+, D, E, F, G	89.0631	419.00	**515.37**
1150 x 500mm	607	2072	300W	A, A+, D, E, F, G	89.0632	523.00	**643.29**
1150 x 600mm	703	2399	450W	A, A+, D, E, F, G	89.0633	581.00	**714.63**
1400 x 500mm	736	2512	450W	A, A+, D, E, F, G	89.0634	567.00	**697.41**
1400 x 600mm	853	2911	600W	A, A+, D, E, F, G	89.0635	632.00	**777.36**
1640 x 500mm	869	2966	600W	A, A+, D, E, F, G	89.0636	614.00	**755.22**
1640 x 600mm	1007	3436	600W	A, A+, D, E, F, G	89.0637	688.00	**846.24**

Helmsley Towel Rail - Matt Black

Size H x W	Watts	BTU	Element Output	Element Type	Code	€ Ex VAT	€ Inc VAT
800 x 500mm	437	1492	300W	A, A+, D, E, F, G	89.0638	378.00	**464.94**
800 x 600mm	506	1727	300W	A, A+, D, E, F, G	89.0639	419.00	**515.37**
1150 x 500mm	607	2072	300W	A, A+, D, E, F, G	89.0640	523.00	**643.29**
1150 x 600mm	703	2399	450W	A, A+, D, E, F, G	89.0641	581.00	**714.63**
1400 x 500mm	736	2512	450W	A, A+, D, E, F, G	89.0642	567.00	**697.41**
1400 x 600mm	853	2911	600W	A, A+, D, E, F, G	89.0643	632.00	**777.36**
1640 x 500mm	869	2966	600W	A, A+, D, E, F, G	89.0644	614.00	**755.22**
1640 x 600mm	1007	3436	600W	A, A+, D, E, F, G	89.0645	688.00	**846.24**

TECHNICAL INFORMATION

All measurements in Height by Width. Heat output based on ▲T60˚C. Radiators that are electric only are restricted to the heat output of the elements. Element size can be increased to full capacity of rail if using element type D, E, F or G. For element types see pages 718-729. For matching valves see pages 731-737. For indirect heating systems only. Tappings are approx. 50mm and approx. 79mm off the wall. Price includes radiator and wall fixing sets, valves extra.

Technical Tables & Drawings
Page 762-763

Matt White



Matt Grey



Matt Anthracite



Matt Black



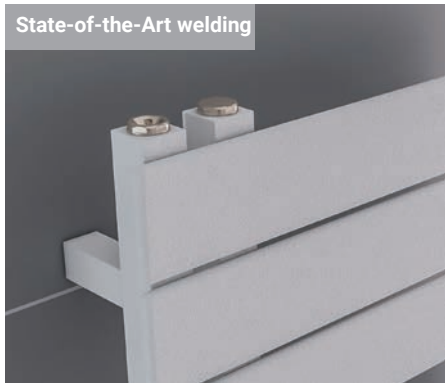

Radiator Valves
Page 731-737



Designer Range

PLATANI

Warranty 5 Year | Heating | All Electric | Dual-Fuel



Pictured 89.1355 Chrome

Bar Dimensions (mm)

Horizontal Bars 40 x 20mm
Vertical Bars 30 x 30mm



Pictured 89.1344 Matt Anthracite

Can be reverse handed (Left or Right)

A stunning reversible style towel rail with evenly spaced horizontal bars. Available in 5 colours from stock including high qualiy chrome finish.

FEATURES

- 40 x 20mm. horizontal bars and 30 x 30mm. vertical profiles
- Rear fixing metal wall brackets
- Tested to BS EN 442 standards
- 5 colours available from stock
- Can be reverse handed (left or right)
- Can be single, dual fuel or all electric
- State-of-the-Art welding technology
- 5 Year Manufacturer's Warranty*

* With conditions



SWATCHES AVAILABLE

Round Vent Caps
Page 741



Designer Range

PLATANI

Platani Towel Rail - Matt White

Size H x W	Watts	BTU	Element Output	Element Type	Code	€ Ex VAT	€ Inc VAT
800 x 500mm	339	1157	150W	A, A+, D, E, F, G	89.1328	276.00	**339.48**
800 x 600mm	389	1328	150W	A, A+, D, E, F, G	89.1329	308.00	**378.84**
1150 x 500mm	467	1594	150W	A, A+, D, E, F, G	89.1330	380.00	**467.40**
1150 x 600mm	535	1826	150W	A, A+, D, E, F, G	89.1331	427.00	**525.21**
1800 x 500mm	703	2399	300W	A, A+, D, E, F, G	89.1332	481.00	**591.63**
1800 x 600mm	806	2751	300W	A, A+, D, E, F, G	89.1333	538.00	**661.74**

Platani Towel Rail - Matt Grey

Size H x W	Watts	BTU	Element Output	Element Type	Code	€ Ex VAT	€ Inc VAT
800 x 500mm	339	1157	150W	A, A+, D, E, F, G	89.1334	276.00	**339.48**
800 x 600mm	389	1328	150W	A, A+, D, E, F, G	89.1335	308.00	**378.84**
1150 x 500mm	467	1594	150W	A, A+, D, E, F, G	89.1336	380.00	**467.40**
1150 x 600mm	535	1826	150W	A, A+, D, E, F, G	89.1337	427.00	**525.21**
1800 x 500mm	703	2399	300W	A, A+, D, E, F, G	89.1338	481.00	**591.63**
1800 x 600mm	806	2751	300W	A, A+, D, E, F, G	89.1339	538.00	**661.74**

Platani Towel Rail - Chrome

Size H x W	Watts	BTU	Element Output	Element Type	Code	€ Ex VAT	€ Inc VAT
800 x 500mm	216	737	100W	A, A+, D, E, F, G	89.1352	352.00	**432.96**
800 x 600mm	247	843	100W	A, A+, D, E, F, G	89.1353	395.00	**485.85**
1150 x 500mm	299	1021	150W	A, A+, D, E, F, G	89.1354	485.00	**596.55**
1150 x 600mm	342	1167	150W	A, A+, D, E, F, G	89.1355	545.00	**670.35**
1800 x 500mm	455	1553	150W	A, A+, D, E, F, G	89.1356	675.00	**830.25**
1800 x 600mm	520	1775	150W	A, A+, D, E, F, G	89.1357	755.00	**928.65**

Platani Towel Rail - Matt Anthracite

Size H x W	Watts	BTU	Element Output	Element Type	Code	€ Ex VAT	€ Inc VAT
800 x 500mm	339	1157	150W	A, A+, D, E, F, G	89.1340	276.00	**339.48**
800 x 600mm	389	1328	150W	A, A+, D, E, F, G	89.1341	308.00	**378.84**
1150 x 500mm	467	1594	150W	A, A+, D, E, F, G	89.1342	380.00	**467.40**
1150 x 600mm	535	1826	150W	A, A+, D, E, F, G	89.1343	427.00	**525.21**
1800 x 500mm	703	2399	300W	A, A+, D, E, F, G	89.1344	481.00	**591.63**
1800 x 600mm	806	2751	300W	A, A+, D, E, F, G	89.1345	538.00	**661.74**

Platani Towel Rail - Matt Black

Size H x W	Watts	BTU	Element Output	Element Type	Code	€ Ex VAT	€ Inc VAT
800 x 500mm	339	1157	150W	A, A+, D, E, F, G	89.1346	276.00	**339.48**
800 x 600mm	389	1328	150W	A, A+, D, E, F, G	89.1347	308.00	**378.84**
1150 x 500mm	467	1594	150W	A, A+, D, E, F, G	89.1348	380.00	**467.40**
1150 x 600mm	535	1826	150W	A, A+, D, E, F, G	89.1349	427.00	**525.21**
1800 x 500mm	703	2399	300W	A, A+, D, E, F, G	89.1350	481.00	**591.63**
1800 x 600mm	806	2751	300W	A, A+, D, E, F, G	89.1351	538.00	**661.74**

Radiator Valves
Page 731-737



TECHNICAL INFORMATION

All measurements in Height by Width. Heat output based on ▲T60˚C. Radiators that are electric only are restricted to the heat output of the elements. Element size can be increased to full capacity of rail if using element type D, E, F or G. For element types see pages 718-729. For matching valves see pages 731-737. For indirect heating systems only. Tappings are approx. 50mm and approx. 80mm off the wall. Projection from wall is 115mm. Price includes radiator and wall fixing sets, valves extra.

Technical Tables & Drawings
Page 762-763

Matt White



Matt Grey



Chrome



Matt Anthracite



Matt Black



Reversible Design



Designer Range

REINBACH

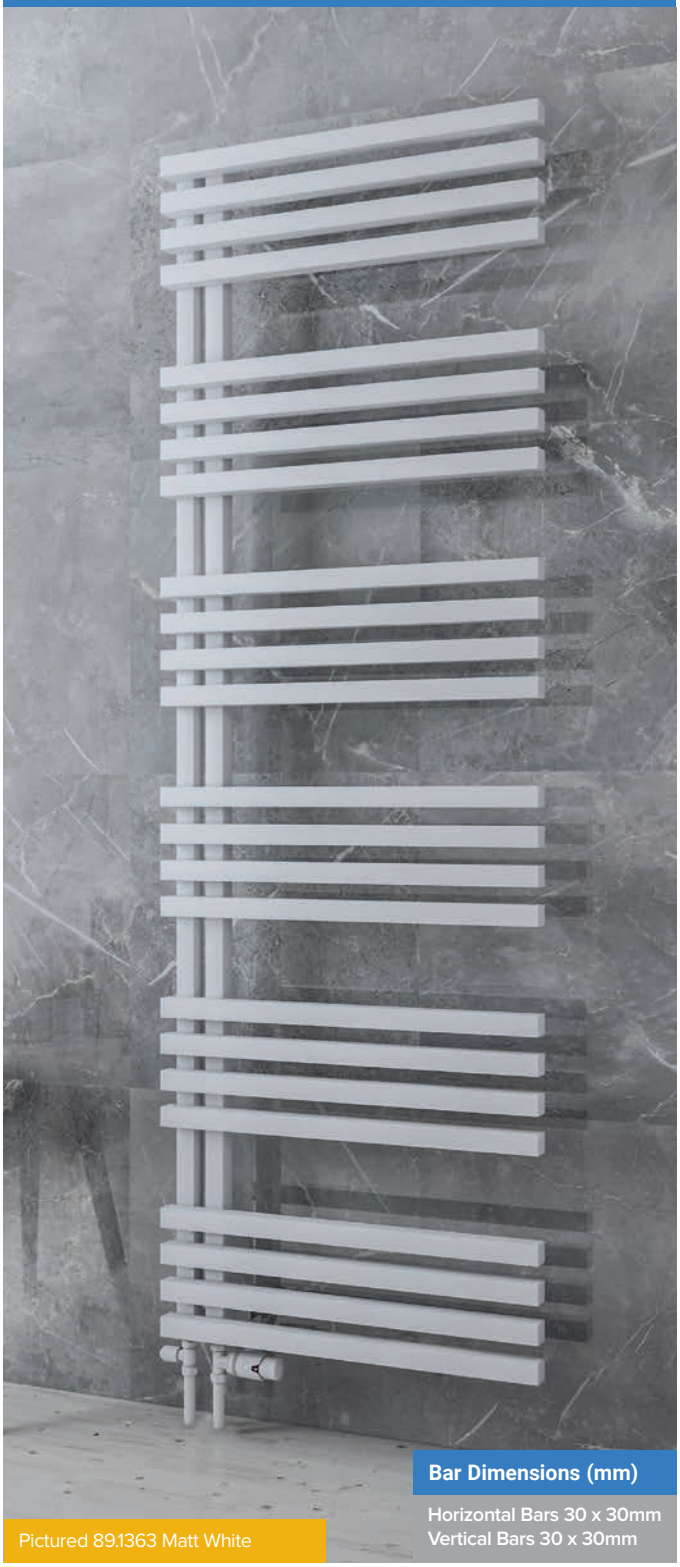

Pictured 89.1363 Matt White

Bar Dimensions (mm)

Horizontal Bars 30 x 30mm
Vertical Bars 30 x 30mm



Pictured 89.1384 Matt Black

Can be reverse handed (Left or Right)

Another reversible style design, Reinbach reaches the top levels of design with bulky horizontal bars that are capable of drying your largest towels.

FEATURES

- 30 x 30mm. horizontal bars and 30 x 30mm. vertical profiles
- Rear fixing metal wall brackets
- Tested to BS EN 442 standards
- 5 colours available from stock
- Can be reverse handed (left or right)
- Can be single, dual fuel or all electric
- State-of-the-Art welding technology
- 5 Year Manufacturer's Warranty*

* With conditions



Round Vent Caps
Page 741



Designer Range

REINBACH

Reinbach Towel Rail - Matt White

Size H x W	Watts	BTU	Element Output	Element Type	Code	€ Ex VAT	€ Inc VAT
800 x 500mm	466	1590	150W	A, A+, D, E, F, G	89.1358	328.00	**403.44**
800 x 600mm	556	1898	300W	A, A+, D, E, F, G	89.1359	364.00	**447.72**
1200 x 500mm	671	2290	300W	A, A+, D, E, F, G	89.1360	447.00	**549.81**
1200 x 600mm	802	2737	300W	A, A+, D, E, F, G	89.1361	503.00	**618.69**
1800 x 500mm	976	3331	450W	A, A+, D, E, F, G	89.1362	574.00	**706.02**
1800 x 600mm	1166	3979	600W	A, A+, D, E, F, G	89.1363	640.00	**787.20**

Reinbach Towel Rail - Matt Cappuccino

Size H x W	Watts	BTU	Element Output	Element Type	Code	€ Ex VAT	€ Inc VAT
800 x 500mm	466	1590	150W	A, A+, D, E, F, G	89.1364	328.00	**403.44**
800 x 600mm	556	1898	300W	A, A+, D, E, F, G	89.1365	364.00	**447.72**
1200 x 500mm	671	2290	300W	A, A+, D, E, F, G	89.1366	447.00	**549.81**
1200 x 600mm	802	2737	300W	A, A+, D, E, F, G	89.1367	503.00	**618.69**
1800 x 500mm	976	3331	450W	A, A+, D, E, F, G	89.1368	574.00	**706.02**
1800 x 600mm	1166	3979	600W	A, A+, D, E, F, G	89.1369	640.00	**787.20**

Reinbach Towel Rail - Matt Black

Size H x W	Watts	BTU	Element Output	Element Type	Code	€ Ex VAT	€ Inc VAT
800 x 500mm	466	1590	150W	A, A+, D, E, F, G	89.1382	328.00	**403.44**
800 x 600mm	556	1898	300W	A, A+, D, E, F, G	89.1383	364.00	**447.72**
1200 x 500mm	671	2290	300W	A, A+, D, E, F, G	89.1384	447.00	**549.81**
1200 x 600mm	802	2737	300W	A, A+, D, E, F, G	89.1385	503.00	**618.69**
1800 x 500mm	976	3331	450W	A, A+, D, E, F, G	89.1386	574.00	**706.02**
1800 x 600mm	1166	3979	600W	A, A+, D, E, F, G	89.1387	640.00	**787.20**

Reinbach Towel Rail - Matt Grey

Size H x W	Watts	BTU	Element Output	Element Type	Code	€ Ex VAT	€ Inc VAT
800 x 500mm	466	1590	150W	A, A+, D, E, F, G	89.1370	328.00	**403.44**
800 x 600mm	556	1898	300W	A, A+, D, E, F, G	89.1371	364.00	**447.72**
1200 x 500mm	671	2290	300W	A, A+, D, E, F, G	89.1372	447.00	**549.81**
1200 x 600mm	802	2737	300W	A, A+, D, E, F, G	89.1373	503.00	**618.69**
1800 x 500mm	976	3331	450W	A, A+, D, E, F, G	89.1374	574.00	**706.02**
1800 x 600mm	1166	3979	600W	A, A+, D, E, F, G	89.1375	640.00	**787.20**

Reinbach Towel Rail - Matt Anthracite

Size H x W	Watts	BTU	Element Output	Element Type	Code	€ Ex VAT	€ Inc VAT
800 x 500mm	466	1590	150W	A, A+, D, E, F, G	89.1376	328.00	**403.44**
800 x 600mm	556	1898	300W	A, A+, D, E, F, G	89.1377	364.00	**447.72**
1200 x 500mm	671	2290	300W	A, A+, D, E, F, G	89.1378	447.00	**549.81**
1200 x 600mm	802	2737	300W	A, A+, D, E, F, G	89.1379	503.00	**618.69**
1800 x 500mm	976	3331	450W	A, A+, D, E, F, G	89.1380	574.00	**706.02**
1800 x 600mm	1166	3979	600W	A, A+, D, E, F, G	89.1381	640.00	**787.20**

Radiator Valves
Page 731-737



TECHNICAL INFORMATION

All measurements in Height by Width. Heat output based on ▲T60˚C. Radiators that are electric only are restricted to the heat output of the elements. Element size can be increased to full capacity of rail if using element type D, E, F or G. For element types see pages 718-729. For matching valves see pages 731-737. For indirect heating systems only. Tappings are approx. 50mm and approx. 80mm off the wall. Projection from wall is 125mm. Price includes radiator and wall fixing sets, valves extra.

Technical Tables & Drawings
Page 762-763

Matt White



Matt Cappuccino

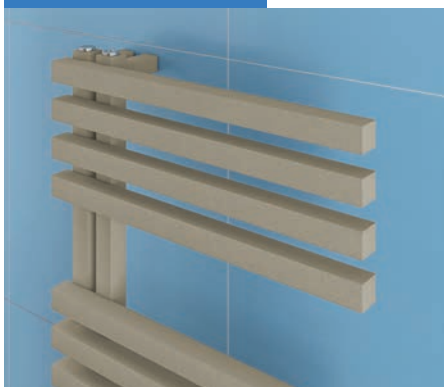

Matt Grey

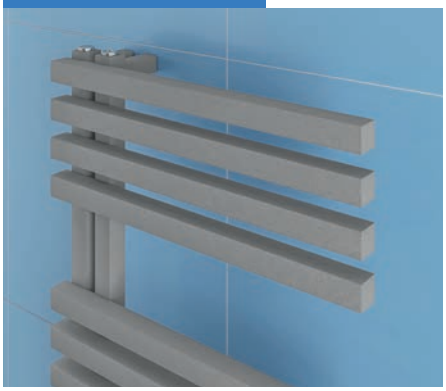

Matt Anthracite



Matt Black





Designer Range

MARLOW

Warranty 5 Year

Diameter (Ø) 42 MM Bars

Heating



Pictured 89.0526 Chrome



Pictured 89.0516 Matt Grey

Rear fixing metal wall brackets

State-of-the-Art welding meets large vertical and horizontal tubes in this model. Available in a variety of colours to suit any bathroom. The generous spacing between the horizontal tubes allows for maximum towel drying.

FEATURES

- 42mm diameter horizontal bars
- 42mm diameter vertical profiles
- Rear fixing metal wall brackets
- Tested to BS EN 442 standards
- 5 colours available from stock
- State-of-the-Art welding technology
- 5 Year Manufacturer's Warranty*

* With conditions



SWATCHES AVAILABLE

Round Vent Caps

Page 741



Designer Range

MARLOW

Marlow Towel Rail - Matt White

Size H x W	Watts	BTU	Element Output	Element Type	Code	€ Ex VAT	€ Inc VAT
850 x 500mm	399	1362	N/A	N/A	89.0500	496.00	**610.08**
850 x 600mm	452	1543	N/A	N/A	89.0501	528.00	**649.44**
1150 x 500mm	534	1823	N/A	N/A	89.0502	612.00	**752.76**
1150 x 600mm	606	2068	N/A	N/A	89.0503	647.00	**795.81**
1750 x 500mm	804	2744	N/A	N/A	89.0504	810.00	**996.30**
1750 x 600mm	912	3112	N/A	N/A	89.0505	857.00	**1054.11**

Marlow Towel Rail - Matt Grey

Size H x W	Watts	BTU	Element Output	Element Type	Code	€ Ex VAT	€ Inc VAT
850 x 500mm	399	1362	N/A	N/A	89.0512	496.00	**610.08**
850 x 600mm	452	1543	N/A	N/A	89.0513	528.00	**649.44**
1150 x 500mm	534	1823	N/A	N/A	89.0514	612.00	**752.76**
1150 x 600mm	606	2068	N/A	N/A	89.0515	647.00	**795.81**
1750 x 500mm	804	2744	N/A	N/A	89.0516	810.00	**996.30**
1750 x 600mm	912	3112	N/A	N/A	89.0517	857.00	**1054.11**

Marlow Towel Rail - Chrome

Size H x W	Watts	BTU	Element Output	Element Type	Code	€ Ex VAT	€ Inc VAT
850 x 500mm	257	877	N/A	N/A	89.0524	688.00	**846.24**
850 x 600mm	293	1000	N/A	N/A	89.0525	728.00	**895.44**
1150 x 500mm	344	1174	N/A	N/A	89.0526	847.00	**1041.81**
1150 x 600mm	392	1338	N/A	N/A	89.0527	899.00	**1105.77**
1750 x 500mm	520	1775	N/A	N/A	89.0528	1123.00	**1381.29**
1750 x 600mm	594	2027	N/A	N/A	89.0529	1190.00	**1463.70**

Marlow Towel Rail - Matt Anthracite

Size H x W	Watts	BTU	Element Output	Element Type	Code	€ Ex VAT	€ Inc VAT
850 x 500mm	399	1362	N/A	N/A	89.0506	496.00	**610.08**
850 x 600mm	452	1543	N/A	N/A	89.0507	528.00	**649.44**
1150 x 500mm	534	1823	N/A	N/A	89.0508	612.00	**752.76**
1150 x 600mm	606	2068	N/A	N/A	89.0509	647.00	**795.81**
1750 x 500mm	804	2744	N/A	N/A	89.0510	810.00	**996.30**
1750 x 600mm	912	3112	N/A	N/A	89.0511	857.00	**1054.11**

Marlow Towel Rail - Matt Cappuccino

Size H x W	Watts	BTU	Element Output	Element Type	Code	€ Ex VAT	€ Inc VAT
850 x 500mm	399	1362	N/A	N/A	89.0518	545.00	**670.35**
850 x 600mm	452	1543	N/A	N/A	89.0519	579.00	**712.17**
1150 x 500mm	534	1823	N/A	N/A	89.0520	674.00	**829.02**
1150 x 600mm	606	2068	N/A	N/A	89.0521	712.00	**875.76**
1750 x 500mm	804	2744	N/A	N/A	89.0522	892.00	**1097.16**
1750 x 600mm	912	3112	N/A	N/A	89.0523	947.00	**1164.81**

Radiator Valves
Page 731-737



TECHNICAL INFORMATION

All measurements in Height by Width. Heat output based on ▲T60˚C. Not suitable for elements. For matching valves see pages 731-737. For indirect heating systems only. Tappings are approx. 82mm less than the width of the rail and approx. 85mm off the wall. Price includes radiator and wall fixing sets, valves extra.

Technical Tables & Drawings
Page 764-765

Matt White



Matt Grey



Chrome



Matt Anthracite



Matt Cappuccino





Designer Range

MARLOW E-STYLE

Warranty 5 Year

Diameter (Ø) 42 MM Bars

Heating

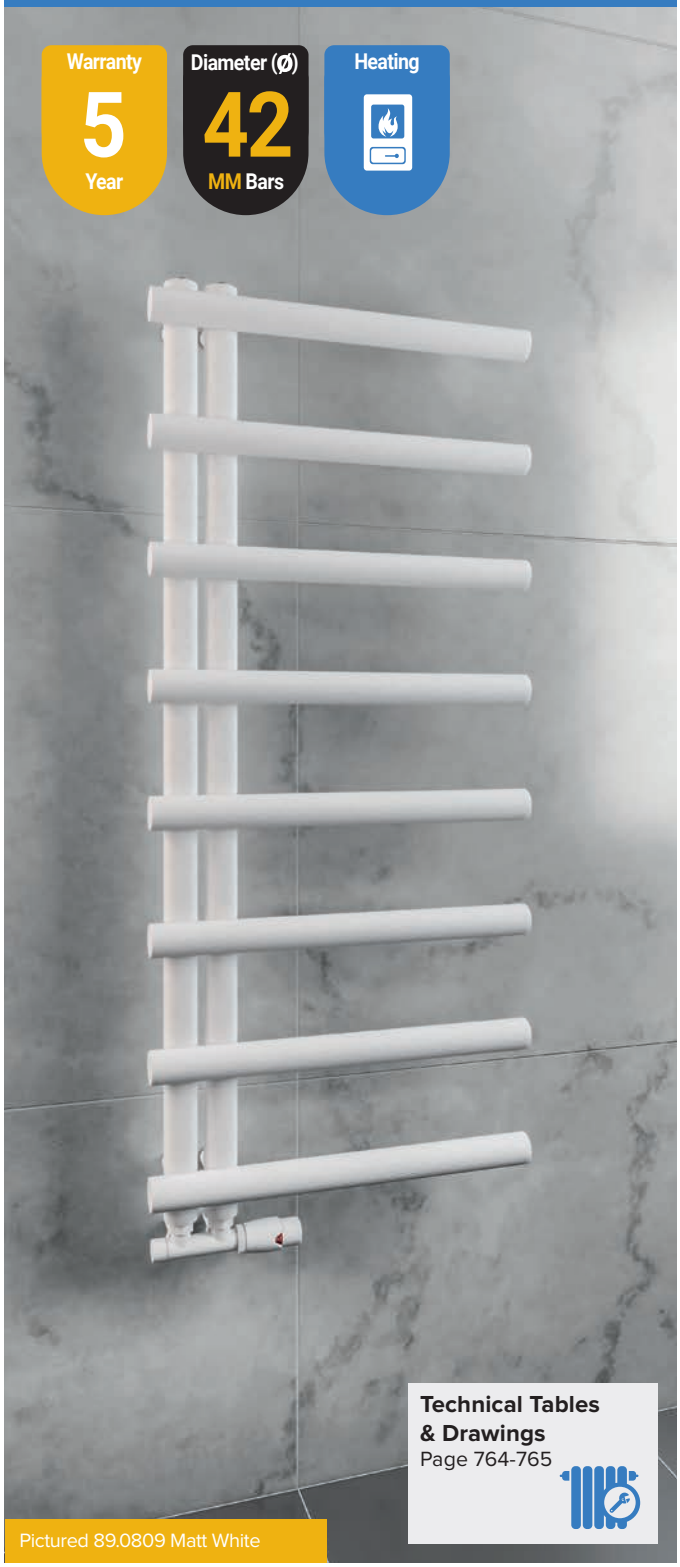

Pictured 89.0809 Matt White

Technical Tables & Drawings
Page 764-765



Pictured 89.0835 Chrome

Can be reverse handed (Left or Right)

State-of-the-Art welding meets large vertical and horizontal tubes in this model. Available in a variety of colours to suit any bathroom. The generous spacing between the horizontal tubes allows for maximum towel drying.

FEATURES
- 42mm diameter horizontal bars
- 42mm diameter vertical profiles
- Rear fixing metal wall brackets
- Tested to BS EN 442 standards
- 5 colours available from stock
- Can be reverse handed (left or right)
- State-of-the-Art welding technology
- 5 Year Manufacturer's Warranty*

* With conditions



SWATCHES AVAILABLE

Round Vent Caps
Page 741



Designer Range

MARLOW E-STYLE

Marlow E-Style Towel Rail - Matt White

Size H x W	Watts	BTU	Element Output	Element Type	Code	€ Ex VAT	€ Inc VAT
850 x 500mm	371	1266	N/A	N/A	89.0807	362.00	**445.26**
850 x 600mm	422	1440	N/A	N/A	89.0808	405.00	**498.15**
1150 x 500mm	497	1696	N/A	N/A	89.0809	497.00	**611.31**
1150 x 600mm	566	1932	N/A	N/A	89.0810	555.00	**682.65**
1750 x 500mm	756	2580	N/A	N/A	89.0811	635.00	**781.05**
1750 x 600mm	861	2938	N/A	N/A	89.0812	707.00	**869.61**

Marlow E-Style Towel Rail - Matt Grey

Size H x W	Watts	BTU	Element Output	Element Type	Code	€ Ex VAT	€ Inc VAT
850 x 500mm	371	1266	N/A	N/A	89.0819	362.00	**445.26**
850 x 600mm	422	1440	N/A	N/A	89.0820	405.00	**498.15**
1150 x 500mm	497	1696	N/A	N/A	89.0821	497.00	**611.31**
1150 x 600mm	566	1932	N/A	N/A	89.0822	555.00	**682.65**
1750 x 500mm	756	2580	N/A	N/A	89.0823	635.00	**781.05**
1750 x 600mm	861	2938	N/A	N/A	89.0824	707.00	**869.61**

Marlow E-Style Towel Rail - Chrome

Size H x W	Watts	BTU	Element Output	Element Type	Code	€ Ex VAT	€ Inc VAT
850 x 500mm	242	826	N/A	N/A	89.0831	460.00	**565.80**
850 x 600mm	274	935	N/A	N/A	89.0832	514.00	**632.22**
1150 x 500mm	325	1109	N/A	N/A	89.0833	635.00	**781.05**
1150 x 600mm	368	1256	N/A	N/A	89.0834	707.00	**869.61**
1750 x 500mm	491	1676	N/A	N/A	89.0835	878.00	**1079.94**
1750 x 600mm	555	1894	N/A	N/A	89.0836	985.00	**1211.55**

Marlow E-Style Towel Rail - Matt Anthracite

Size H x W	Watts	BTU	Element Output	Element Type	Code	€ Ex VAT	€ Inc VAT
850 x 500mm	371	1266	N/A	N/A	89.0813	362.00	**445.26**
850 x 600mm	422	1440	N/A	N/A	89.0814	405.00	**498.15**
1150 x 500mm	497	1696	N/A	N/A	89.0815	497.00	**611.31**
1150 x 600mm	566	1932	N/A	N/A	89.0816	555.00	**682.65**
1750 x 500mm	756	2580	N/A	N/A	89.0817	635.00	**781.05**
1750 x 600mm	861	2938	N/A	N/A	89.0818	707.00	**869.61**

Marlow E-Style Towel Rail- Matt Cappuccino

Size H x W	Watts	BTU	Element Output	Element Type	Code	€ Ex VAT	€ Inc VAT
850 x 500mm	371	1266	N/A	N/A	89.0825	362.00	**445.26**
850 x 600mm	422	1440	N/A	N/A	89.0826	405.00	**498.15**
1150 x 500mm	497	1696	N/A	N/A	89.0827	497.00	**611.31**
1150 x 600mm	566	1932	N/A	N/A	89.0828	555.00	**682.65**
1750 x 500mm	756	2580	N/A	N/A	89.0829	635.00	**781.05**
1750 x 600mm	861	2938	N/A	N/A	89.0830	707.00	**869.61**

Twin TRV's
Page 733



Tappings: **50mm**

TECHNICAL INFORMATION

All measurements in Height by Width. Heat output based on ▲T60˚C. Not suitable for elements. For matching valves see pages 731-737. For indirect heating systems only. Tappings are 50mm and approx. 85mm off the wall. Price includes radiator and wall fixing sets, valves extra.

Matt White



Matt Grey



Chrome



Matt Anthracite



Matt Cappuccino



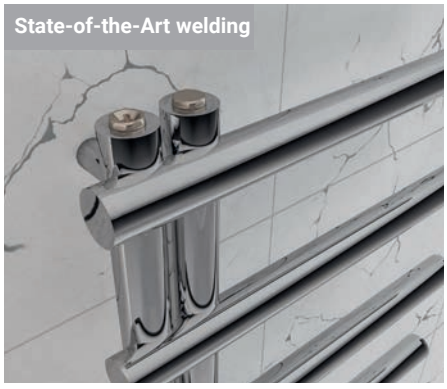

Designer Range

LAMBOURNE

New Product



Pictured 89.1701 Chrome (side connection valves shown)

A masterpiece for your bathroom or any other room. The vertical bars at the ends can be used as towel / bathrobe hangers, middle section at the top can be used to dry your towels too. This exceptional design is available in 2 heights and 2 widths with 4 colour options.

FEATURES

- 42mm diameter horizontal bars
- 42mm diameter vertical profiles
- Rear fixing metal wall brackets
- Tested to BS EN 442 standards
- State-of-the-Art welding technology
- Can have either side or bottom connections
- 4 colours available from stock
- 5 Year Manufacturer's Warranty*

*With conditions

Technical Tables & Drawings
Page 764-765

TECHNICAL INFORMATION

All measurements in Height by Width. Heat output based on ▲T60˚C. Radiators that are electric only are restricted to the heat output of the elements. Element size can be increased to full capacity of rail if using element type D, E, F or G. For element types see pages 718-729. For matching valves see pages 731-737. For indirect heating systems only. **For side connection**, tappings are the width of the rail and approx. 85mm off the wall. **For bottom connection**, tappings are approx. 180mm less than the width of the rail and approx. 106mm off the wall. Projection from wall 127mm. Price includes radiator and wall fixing sets, valves extra.

Designer Range

New Product

LAMBOURNE

Lambourne Designer Radiator - Matt White

Size H x W	Watts	BTU	Element Output	Element Type	Code	€ Ex VAT	€ Inc VAT
1200 x 420mm	649	2215	150W	A, A+, D, E, F, G	89.1703	427.00	**525.21**
1200 x 540mm	837	2856	300W	A, A+, D, E, F, G	89.1704	534.00	**656.82**
1800 x 420mm	888	3030	300W	A, A+, D, E, F, G	89.1695	532.00	**654.36**
1800 x 540mm	1146	3911	450W	A, A+, D, E, F, G	89.1696	665.00	**817.95**

Lambourne Designer Radiator - Matt Anthracite

Size H x W	Watts	BTU	Element Output	Element Type	Code	€ Ex VAT	€ Inc VAT
1200 x 420mm	649	2215	150W	A, A+, D, E, F, G	89.1705	427.00	**525.21**
1200 x 540mm	837	2856	300W	A, A+, D, E, F, G	89.1706	534.00	**656.82**
1800 x 420mm	888	3030	300W	A, A+, D, E, F, G	89.1697	532.00	**654.36**
1800 x 540mm	1146	3911	450W	A, A+, D, E, F, G	89.1698	665.00	**817.95**

Lambourne Designer Radiator - Matt Black

Size H x W	Watts	BTU	Element Output	Element Type	Code	€ Ex VAT	€ Inc VAT
1200 x 420mm	649	2215	150W	A, A+, D, E, F, G	89.1707	427.00	**525.21**
1200 x 540mm	837	2856	300W	A, A+, D, E, F, G	89.1708	534.00	**656.82**
1800 x 420mm	888	3030	300W	A, A+, D, E, F, G	89.1699	532.00	**654.36**
1800 x 540mm	1146	3911	450W	A, A+, D, E, F, G	89.1700	665.00	**817.95**

Lambourne Designer Radiator - Chrome

Size H x W	Watts	BTU	Element Output	Element Type	Code	€ Ex VAT	€ Inc VAT
1200 x 420mm	426	1454	150W	A, A+, D, E, F, G	89.1709	569.00	**699.87**
1200 x 540mm	549	1874	150W	A, A+, D, E, F, G	89.1710	709.00	**872.07**
1800 x 420mm	652	2225	150W	A, A+, D, E, F, G	89.1701	709.00	**872.07**
1800 x 540mm	842	2873	300W	A, A+, D, E, F, G	89.1702	887.00	**1091.01**



Pictured 89.1706 Matt Anthracite (bottom connection valves shown)



Side Connection shown: For dual fuel installation element can only be fitted vertically from the bottom inside left or right hand profile. (T piece not required)



Bottom Connection shown: Valves can also be fitted from the bottom inlets. For electric only installation element can be fitted to the left or right hand side.



Matt White



Matt Anthracite



Matt Black



Chrome

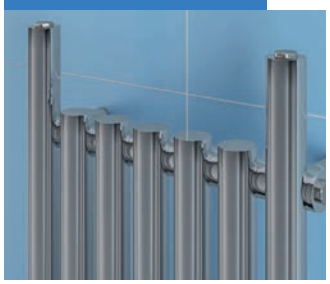

Designer Range

MURANO VERTICAL

Pictured 89.0908 Matt Grey



Pictured 89.0916 Matt Anthracite



Double profile construction

Murano Vertical Radiator - Gloss White

Size H x W	Watts	BTU	Element Output	Element Type	Code	€ Ex VAT	€ Inc VAT
1800 x 310mm	947	3232	N/A	N/A	89.0901	601.00	**739.23**
1800 x 410mm	1301	4440	N/A	N/A	89.0902	800.00	**984.00**
1800 x 510mm	1667	5688	N/A	N/A	89.0903	999.00	**1228.77**

Murano Vertical Radiator - Matt Grey

Size H x W	Watts	BTU	Element Output	Element Type	Code	€ Ex VAT	€ Inc VAT
1800 x 310mm	947	3232	N/A	N/A	89.0908	601.00	**739.23**
1800 x 410mm	1301	4440	N/A	N/A	89.0909	800.00	**984.00**
1800 x 510mm	1667	5688	N/A	N/A	89.0910	999.00	**1228.77**

Murano Vertical Radiator - Matt Anthracite

Size H x W	Watts	BTU	Element Output	Element Type	Code	€ Ex VAT	€ Inc VAT
1800 x 310mm	947	3232	N/A	N/A	89.0915	601.00	**739.23**
1800 x 410mm	1301	4440	N/A	N/A	89.0916	800.00	**984.00**
1800 x 510mm	1667	5688	N/A	N/A	89.0917	999.00	**1228.77**

Murano Vertical Radiator - Matt Black

Size H x W	Watts	BTU	Element Output	Element Type	Code	€ Ex VAT	€ Inc VAT
1800 x 310mm	947	3232	N/A	N/A	89.0922	601.00	**739.23**
1800 x 410mm	1301	4440	N/A	N/A	89.0923	800.00	**984.00**
1800 x 510mm	1667	5688	N/A	N/A	89.0924	999.00	**1228.77**

Double vertical round bars and double horizontal bars create this eye catching radiator; Murano. Available in vertical horizontal styles with 4 finishes.

FEATURES

- 22mm diameter vertical bars
- Double tube on tube construction
- Tested to BS EN 442 standards
- 4 colours available from stock
- State-of-the-Art welding technology
- 5 Year Manufacturer's Warranty*

* With conditions

Technical Tables & Drawings
Page 764-765

TECHNICAL INFORMATION

All measurements in Height by Width. Heat output based on ▲T60˚C. Not suitable for elements. For matching valves see pages 731-737. For indirect heating systems only. Comes with built-in flow diverter. Tappings are width of the rail and approx. 50mm off the wall. Projection from wall is 86mm. Price includes radiator and wall fixing sets, valves extra.

Round Vent Caps
Page 741

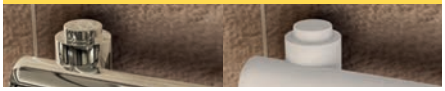

Designer Range

MURANO HORIZONTAL





Murano Horizontal Radiator - Gloss White

Size H x W	Watts	BTU	Element Output	Element Type	Code	€ Ex VAT	€ Inc VAT
600 x 800mm	864	2948	300W	A, A+, D, F, G	89.0897	446.00	**548.58**
600 x 1000mm	1103	3764	450W	A, A+, D, F, G	89.0898	558.00	**686.34**
600 x 1200mm	1348	4600	450W	A, A+, D, F, G	89.0899	668.00	**821.64**
600 x 1400mm	1596	5446	600W	A+, D, F, G	89.0900	780.00	**959.40**

Murano Horizontal Radiator - Matt Grey

Size H x W	Watts	BTU	Element Output	Element Type	Code	€ Ex VAT	€ Inc VAT
600 x 800mm	864	2948	300W	A, A+, D, F, G	89.0904	446.00	**548.58**
600 x 1000mm	1103	3764	450W	A, A+, D, F, G	89.0905	558.00	**686.34**
600 x 1200mm	1348	4600	450W	A, A+, D, F, G	89.0906	668.00	**821.64**
600 x 1400mm	1596	5446	600W	A+, D, F, G	89.0907	780.00	**959.40**

Murano Horizontal Radiator - Matt Anthracite

Size H x W	Watts	BTU	Element Output	Element Type	Code	€ Ex VAT	€ Inc VAT
600 x 800mm	864	2948	300W	A, A+, D, F, G	89.0911	446.00	**548.58**
600 x 1000mm	1103	3764	450W	A, A+, D, F, G	89.0912	558.00	**686.34**
600 x 1200mm	1348	4600	450W	A, A+, D, F, G	89.0913	668.00	**821.64**
600 x 1400mm	1596	5446	600W	A+, D, F, G	89.0914	780.00	**959.40**

Murano Horizontal Radiator - Matt Black

Size H x W	Watts	BTU	Element Output	Element Type	Code	€ Ex VAT	€ Inc VAT
600 x 800mm	864	2948	300W	A, A+, D, F, G	89.0918	446.00	**548.58**
600 x 1000mm	1103	3764	450W	A, A+, D, F, G	89.0919	558.00	**686.34**
600 x 1200mm	1348	4600	450W	A, A+, D, F, G	89.0920	668.00	**821.64**
600 x 1400mm	1596	5446	600W	A+, D, F, G	89.0921	780.00	**959.40**

FEATURES

- 22mm diameter horizontal bars
- Double tube on tube construction
- Tested to BS EN 442 standards
- 4 colours available from stock
- State-of-the-Art welding technology
- Can be single, dual fuel or all electric
- 5 Year Manufacturer's Warranty*

* With conditions

Technical Tables & Drawings
Page 766-767

TECHNICAL INFORMATION

All measurements in Height by Width. Heat output based on ▲T60˚C. Radiators that are electric only are restricted to the heat output of the elements. Element size can be increased to full capacity of rail if using element type D, F or G. For element types see pages 718-729. For matching valves see pages 731-737. For indirect heating systems only. Tappings are approx. 45mm less than the width of the rail and approx. 81mm off the wall. Projection from wall is 117mm. Price includes radiator and wall fixing sets, valves extra.

Designer Range

RYTON



Pictured 61.0017 Chrome



Framed rectangular designer towel rail available in a variety of finishes to create a stylish focal point in any bathroom.

FEATURES
- Tested to BS EN 442 standards
- A brave alternative for a basic towel radiator
- Can be single, dual fuel or all electric (element can only be fitted on the right hand side)
- 5 Year Manufacturer's Warranty*

* With conditions

Technical Tables & Drawings
Page 766-767

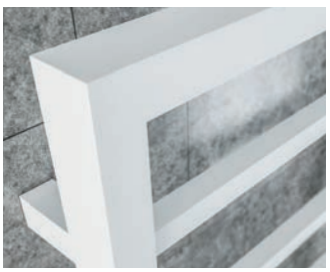

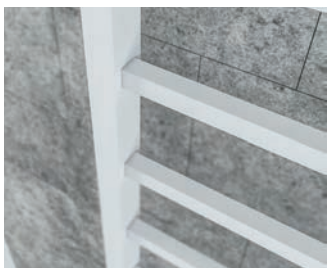

TECHNICAL INFORMATION

All measurements in Height by Width. Heat output based on ▲T60˚C. Radiators that are electric only are restricted to the heat output of the elements. Element size can be increased to full capacity of rail if using element type D, E, F or G. Element can only be fitted on the right hand side. For element types see pages 718-729. For matching valves see pages 731-737. For indirect heating systems only. Tappings are approx. 30mm less than the width of the rail and approx. 75-90mm off the wall. Price includes radiator and wall fixing sets, valves extra.

Warranty 5 Year | Heating | All Electric | Dual-Fuel

Designer Range

RYTON

Ryton Towel Rail - Matt White

Size H x W	Watts	BTU	Element Output	Element Type	Code	€ Ex VAT	€ Inc VAT
800 x 500mm	253	863	150W	A, A+, D, E, F, G	61.0002	388.00	**477.24**
800 x 600mm	279	951	150W	A, A+, D, E, F, G	61.0003	423.00	**520.29**
1200 x 500mm	379	1293	150W	A, A+, D, E, F, G	61.0004	483.00	**594.09**
1200 x 600mm	418	1425	150W	A, A+, D, E, F, G	61.0005	524.00	**644.52**
1600 x 500mm	505	1722	300W	A, A+, D, E, F, G	61.0006	614.00	**755.22**
1600 x 600mm	556	1898	300W	A, A+, D, E, F, G	61.0007	670.00	**824.10**

Ryton Towel Rail - Matt Anthracite

Size H x W	Watts	BTU	Element Output	Element Type	Code	€ Ex VAT	€ Inc VAT
800 x 500mm	253	863	150W	A, A+, D, E, F, G	61.0008	388.00	**477.24**
800 x 600mm	279	951	150W	A, A+, D, E, F, G	61.0009	423.00	**520.29**
1200 x 500mm	379	1293	150W	A, A+, D, E, F, G	61.0010	483.00	**594.09**
1200 x 600mm	418	1425	150W	A, A+, D, E, F, G	61.0011	524.00	**644.52**
1600 x 500mm	505	1722	300W	A, A+, D, E, F, G	61.0012	614.00	**755.22**
1600 x 600mm	556	1898	300W	A, A+, D, E, F, G	61.0013	670.00	**824.10**

Ryton Towel Rail - Chrome

Size H x W	Watts	BTU	Element Output	Element Type	Code	€ Ex VAT	€ Inc VAT
800 x 500mm	168	572	100W	A, A+, D, E, F, G	61.0014	579.00	**712.17**
800 x 600mm	185	630	100W	A, A+, D, E, F, G	61.0015	650.00	**799.50**
1200 x 500mm	251	856	150W	A, A+, D, E, F, G	61.0016	730.00	**897.90**
1200 x 600mm	277	944	150W	A, A+, D, E, F, G	61.0017	814.00	**1001.22**
1600 x 500mm	334	1141	150W	A, A+, D, E, F, G	61.0018	884.00	**1087.32**
1600 x 600mm	368	1257	150W	A, A+, D, E, F, G	61.0019	990.00	**1217.70**

Radiator Valves
Page 731-737



Matt White
800mm High



Matt Anthracite
800mm High



Chrome
800mm High



Matt White
1200mm High



Matt Anthracite
1200mm High



Chrome
1200mm High



Matt White
1600mm High



Matt Anthracite
1600mm High



Chrome
1600mm High



Designer Range

KENILWORTH



Pictured 61.0032 Chrome

A contemporary take on a traditional towel rail. This round edged framed design available in a variety of colours will be sure to suit any bathroom.

FEATURES
- Tested to BS EN 442 standards
- A brave alternative for a basic towel radiator
- Can be single, dual fuel or all electric (element can only be fitted on the right hand side)
- 5 Year Manufacturer's Warranty*

* With conditions

Technical Tables & Drawings
Page 766-767

Warranty 5 Year | Heating | All Electric | Dual-Fuel





TECHNICAL INFORMATION

All measurements in Height by Width. Heat output based on ▲T60˚C. Radiators that are electric only are restricted to the heat output of the elements. Element size can be increased to full capacity of rail if using element type D, E, F or G. Element can only be fitted on the right hand side. For element types see pages 718-729. For matching valves see pages 731-737. For indirect heating systems only. Tappings are approx. 32mm less than the width of the rail and approx. 76-91mm off the wall. Price includes radiator and wall fixing sets, valves extra.

Designer Range

KENILWORTH

Kenilworth Towel Rail - Matt White

Size H x W	Watts	BTU	Element Output	Element Type	Code	€ Ex VAT	€ Inc VAT
800 x 500mm	252	860	150W	A, A+, D, E, F, G	61.0020	369.00	**453.87**
800 x 600mm	280	956	150W	A, A+, D, E, F, G	61.0021	406.00	**499.38**
1200 x 500mm	378	1289	150W	A, A+, D, E, F, G	61.0022	467.00	**574.41**
1200 x 600mm	420	1432	150W	A, A+, D, E, F, G	61.0023	506.00	**622.38**
1600 x 500mm	503	1717	300W	A, A+, D, E, F, G	61.0024	595.00	**731.85**
1600 x 600mm	559	1908	300W	A, A+, D, E, F, G	61.0025	653.00	**803.19**

Kenilworth Towel Rail - Matt Anthracite

Size H x W	Watts	BTU	Element Output	Element Type	Code	€ Ex VAT	€ Inc VAT
800 x 500mm	252	863	150W	A, A+, D, E, F, G	61.0026	369.00	**453.87**
800 x 600mm	280	956	150W	A, A+, D, E, F, G	61.0027	406.00	**499.38**
1200 x 500mm	378	1289	150W	A, A+, D, E, F, G	61.0028	467.00	**574.41**
1200 x 600mm	420	1432	150W	A, A+, D, E, F, G	61.0029	506.00	**622.38**
1600 x 500mm	503	1717	300W	A, A+, D, E, F, G	61.0030	595.00	**731.85**
1600 x 600mm	559	1908	300W	A, A+, D, E, F, G	61.0031	653.00	**803.19**

Kenilworth Towel Rail - Chrome

Size H x W	Watts	BTU	Element Output	Element Type	Code	€ Ex VAT	€ Inc VAT
800 x 500mm	167	570	100W	A, A+, D, E, F, G	61.0032	555.00	**682.65**
800 x 600mm	186	633	100W	A, A+, D, E, F, G	61.0033	619.00	**761.37**
1200 x 500mm	250	854	150W	A, A+, D, E, F, G	61.0034	703.00	**864.69**
1200 x 600mm	278	948	150W	A, A+, D, E, F, G	61.0035	789.00	**970.47**
1600 x 500mm	333	1137	150W	A, A+, D, E, F, G	61.0036	847.00	**1041.81**
1600 x 600mm	370	1264	150W	A, A+, D, E, F, G	61.0037	948.00	**1166.04**

Radiator Valves
Page 731-737



Matt White
800mm High



Matt Anthracite
800mm High



Chrome
800mm High



Matt White
1200mm High



Matt Anthracite
1200mm High



Chrome
1200mm High



Matt White
1600mm High



Matt Anthracite
1600mm High



Chrome
1600mm High



Designer Range

LOXLEY

The Loxley range features contemporary clean lines. The square tubes and profiles gives this towel rail an ultra-modern look.

FEATURES
- Tested to BS EN 442 standards
- Modern adaption of a traditional design
- Concealed wall brackets
- Can be single, dual fuel** or all electric** (element can only be fitted on the right hand side)
- 5 Year Manufacturer's Warranty*

* With conditions
** Only certain sizes, see table

Technical Tables & Drawings
Page 766-767

Warranty 5 Year

Heating

All Electric

Dual-Fuel



Pictured 61.0047 Chrome

Loxley Towel Rail - Matt White

Size H x W	Watts	BTU	Element Output	Element Type	Code	€ Ex VAT	€ Inc VAT
800 x 500mm	194	663	100W	A, A+, D, F, G	61.0038	611.00	**751.53**
800 x 600mm	216	736	100W	A, A+, D, F, G	61.0039	665.00	**817.95**
1200 x 500mm	291	993	150W	A, A+, D, E, F, G	61.0040	671.00	**825.33**
1200 x 600mm	323	1102	150W	A, A+, D, E, F, G	61.0041	733.00	**901.59**

Loxley Towel Rail - Matt Anthracite

Size H x W	Watts	BTU	Element Output	Element Type	Code	€ Ex VAT	€ Inc VAT
800 x 500mm	194	663	100W	A, A+, D, F, G	61.0042	611.00	**751.53**
800 x 600mm	216	736	100W	A, A+, D, F, G	61.0043	665.00	**817.95**
1200 x 500mm	291	993	150W	A, A+, D, E, F, G	61.0044	671.00	**825.33**
1200 x 600mm	323	1102	150W	A, A+, D, E, F, G	61.0045	733.00	**901.59**

Loxley Towel Rail - Chrome

Size H x W	Watts	BTU	Element Output	Element Type	Code	€ Ex VAT	€ Inc VAT
800 x 500mm	129	439	N/A	N/A	61.0046	738.00	**907.74**
800 x 600mm	143	487	N/A	N/A	61.0047	831.00	**1022.13**
1200 x 500mm	193	658	100W	A, A+, D, F, G	61.0048	832.00	**1023.36**
1200 x 600mm	214	730	100W	A, A+, D, F, G	61.0049	930.00	**1143.90**

TECHNICAL INFORMATION

All measurements in Height by Width. Heat output based on ▲T60˚C. Radiators that are electric only are restricted to the heat output of the elements. Element size can be increased to full capacity of rail if using element type D, E, F or G. Element can only be fitted on the right hand side. For element types see pages 718-729. For matching valves see pages 731-737. For indirect heating systems only. Tappings are approx. 59mm less than the width of the rail and approx. 76mm off the wall. Price includes radiator and wall fixing sets, valves extra.

Chrome
800mm High



Chrome
1200mm High



Concealed Wall Brackets



Concealed Wall Brackets



Designer Range


Pictured 61.0056 Matt Anthracite

ESHTON

A fresh take on the traditional towel rail. The Eshton range features both round tubes and profiles for a complete contemporary look.

FEATURES
- Tested to BS EN 442 standards
- Modern adaption of a traditional design
- Concealed wall brackets
- Can be single, dual fuel or all electric (element can only be fitted on the right hand side)
- 5 Year Manufacturer's Warranty*

* With conditions

Technical Tables & Drawings
Page 768-769

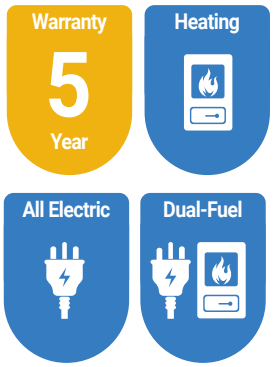

Eshton Towel Rail - Matt White

Size H x W	Watts	BTU	Element Output	Element Type	Code	€ Ex VAT	€ Inc VAT
800 x 500mm	248	848	150W	A, A+, D, E, F, G	61.0050	555.00	**682.65**
800 x 600mm	276	942	150W	A, A+, D, E, F, G	61.0051	607.00	**746.61**
1200 x 500mm	372	1270	150W	A, A+, D, E, F, G	61.0052	619.00	**761.37**
1200 x 600mm	413	1411	150W	A, A+, D, E, F, G	61.0053	619.00	**761.37**

Eshton Towel Rail - Matt Anthracite

Size H x W	Watts	BTU	Element Output	Element Type	Code	€ Ex VAT	€ Inc VAT
800 x 500mm	248	848	150W	A, A+, D, E, F, G	61.0054	555.00	**682.65**
800 x 600mm	276	942	150W	A, A+, D, E, F, G	61.0055	607.00	**746.61**
1200 x 500mm	372	1270	150W	A, A+, D, E, F, G	61.0056	619.00	**761.37**
1200 x 600mm	413	1411	150W	A, A+, D, E, F, G	61.0057	672.00	**826.56**

Eshton Towel Rail - Chrome

Size H x W	Watts	BTU	Element Output	Element Type	Code	€ Ex VAT	€ Inc VAT
800 x 500mm	165	561	100W	A, A+, D, F, G	61.0058	684.00	**841.32**
800 x 600mm	183	624	100W	A, A+, D, F, G	61.0059	766.00	**942.18**
1200 x 500mm	246	841	150W	A, A+, D, E, F, G	61.0060	779.00	**958.17**
1200 x 600mm	274	934	150W	A, A+, D, E, F, G	61.0061	856.00	**1052.88**

TECHNICAL INFORMATION

All measurements in Height by Width. Heat output based on ▲T60˚C. Radiators that are electric only are restricted to the heat output of the elements. Element size can be increased to full capacity of rail if using element type D, E, F or G. Element can only be fitted on the right hand side. For element types see pages 718-729. For matching valves see pages 731-737. For indirect heating systems only. Tappings are approx. 59mm less than the width of the rail and approx. 77mm off the wall. Price includes radiator and wall fixing sets, valves extra.

Chrome
800mm High



Chrome
1200mm High



Concealed Wall Brackets



Concealed Wall Brackets



Designer Range

RUBANO VERTICAL

Pictured 81.0058 Gloss White

Warranty 5 Year

Heating

All Electric

Dual-Fuel

Technical Tables & Drawings
Page 768-769

HEATING NOTE: Radiators that are electric only are restricted to the heat output of the elements.



Close-up without vent caps

A modern take on the traditional radiator. The range features larger profiles for a more contemporary look. Available in gloss white, matt anthracite and a range of sizes makes the Rubano an ideal radiator for any household room.

Rubano Vertical - Gloss White

Size H x W	Watts	BTU	Element Output	Element Type	Code	€ Ex VAT	€ Inc VAT
1800 x 383mm	1658	5654	300W	A, A+, C*, H*	81.0058	570.00	**701.10**
1800 x 503mm	2210	7536	600W	A+, C**, H**	81.0059	758.00	**932.34**

Rubano Vertical - Matt Anthracite

Size H x W	Watts	BTU	Element Output	Element Type	Code	€ Ex VAT	€ Inc VAT
1800 x 383mm	1658	5654	300W	A, A+, C*, H*	81.0064	581.00	**714.63**
1800 x 503mm	2210	7536	600W	A+, C**, H**	81.0065	773.00	**950.79**

*Element Type C and H 300W can be used. ** Element Type C and H 900W can be used.

Rubano Radiator Feet

Description	Code	€ Ex VAT	€ Inc VAT
Rubano Radiator Feet (pair) White	81.0066	49.00	**60.27**
Rubano Radiator Feet (pair) Matt Anthracite	81.0067	49.00	**60.27**

Round Vent Caps
Page 741



Designer Range

RUBANO HORIZONTAL



Pictured 81.0062 Matt Anthracite

Technical Tables & Drawings
Page 768-769

HEATING NOTE: Radiators that are electric only are restricted to the heat output of the elements.

A modern take on the traditional radiator. The range features larger profiles for a more contemporary look. Available in gloss white, matt anthracite and a range of sizes makes the Rubano an ideal radiator for any household room.

Rubano Horizontal Radiators - Gloss White

Size H x W	Watts	BTU	Element Output	Element Type	Code	€ Ex VAT	€ Inc VAT
600 x 383mm	553	1886	300W	A, A+, C*, H*	81.0054	231.00	**284.13**
600 x 623mm	921	3141	450W	A, A+, C, E**, H	81.0055	378.00	**464.94**
600 x 803mm	1197	4082	600W	A, A+, C, E, H	81.0056	489.00	**601.47**
600 x 1103mm	1658	5654	900W	A, A+, C, H	81.0057	674.00	**829.02**

*Element Type C and H only 300W can be used. **Element Type E only 300W can be used.

Rubano Horizontal Radiators - Matt Anthracite

Size H x W	Watts	BTU	Element Output	Element Type	Code	€ Ex VAT	€ Inc VAT
600 x 383mm	553	1886	300W	A, A+, C*, H*	81.0060	236.00	**290.28**
600 x 623mm	921	3141	450W	A, A+, C, E**, H	81.0061	383.00	**471.09**
600 x 803mm	1197	4082	600W	A, A+, C, E, H	81.0062	500.00	**615.00**
600 x 1103mm	1658	5654	900W	A, A+, C, H	81.0063	688.00	**846.24**

*Element Type C and H only 300W can be used. **Element Type E only 300W can be used.

Rubano Radiator Feet

Description	Code	€ Ex VAT	€ Inc VAT
Rubano Radiator Feet (pair) White	81.0066	49.00	**60.27**
Rubano Radiator Feet (pair) Matt Anthracite	81.0067	49.00	**60.27**

Warranty 5 Year | Heating | All Electric | Dual-Fuel

FEATURES

- Tested to BS EN 442 standards
- Modern style column radiator
- Radiator feet option available to get the modern look
- Does not require flow diverter
- Can be single, dual fuel or all electric
- 5 Year Manufacturer's Warranty*

* With conditions

TECHNICAL INFORMATION

All measurements in Height by Width. Heat output based on ▲T60˚C. Radiators that are electric only are restricted to the heat output of the elements. Element size can be increased to full capacity of rail if using element type C, E or H. For element types see pages 718-729. For matching valves see pages 731-737. For indirect heating systems only. Tappings are approx. the width of the rail and 74mm off the wall. Price includes radiator and wall fixing sets, valves extra.

Optional Extra: Rubano Radiator Feet

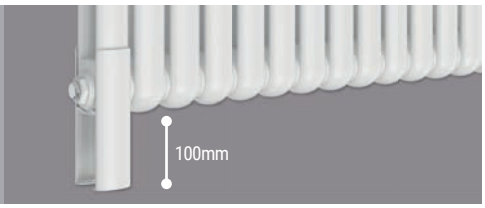

Round Vent Caps
Page 741



Designer Range

ROWSHAM VERTICAL

Pictured 89.0103 Matt White



Bar Dimensions (mm)

Vertical Bars 40 x 20mm

Pictured 89.0109 Matt Anthracite
with 89.0112 Chrome Towel Hanger



The Rowsham Vertical is a designer radiator with stunning clean lines that complement any room.

FEATURES
- 40 x 20mm vertical bars
- Comes with pre-fitted flow diverter
- Tested to BS EN 442 standards
- 5 Year manufacturer's warranty*
- Not suitable for elements

* With conditions

Technical Tables & Drawings
Page 768-769

Rowsham Vertical - Matt White

Size H x W	Watts	BTU	Code	€ Ex VAT	€ Inc VAT
1800 x 300mm	1045	3566	89.0102	467.00	**574.41**
1800 x 380mm	1360	4641	89.0103	597.00	**734.31**
1800 x 500mm	1846	6299	89.0104	615.00	**756.45**

Rowsham Vertical - Matt Anthracite

Size H x W	Watts	BTU	Code	€ Ex VAT	€ Inc VAT
1800 x 300mm	1045	3566	89.0109	467.00	**574.41**
1800 x 380mm	1360	4641	89.0110	597.00	**734.31**
1800 x 500mm	1846	6299	89.0111	615.00	**756.45**

Designer Range

ROWSHAM VERTICAL



Pictured 89.0111 Matt Anthracite

Bar Dimensions (mm)

Vertical Bars 40 x 20mm

COMPLETE THE LOOK

Angled Thermostatic Valves
Page: 732-737



Round Vent Caps
Page 741



TECHNICAL INFORMATION

All measurements in Height by Width. Heat output based on ▲T60˚C. For matching valves see pages 731-737. For indirect heating systems only. Tappings are the width of the rail and approx. 54mm off the wall. Price includes radiator and wall fixing sets, valves extra.

Warranty 5 Year

Heating



Optional Extra - Towel Hanger - Chrome

Description	Code	€ Ex VAT	€ Inc VAT
Towel Hanger 300mm	89.0112	98.00	**120.54**

Compatible with Vertical and Horizontal Radiators. Can be fitted after installation (vertical radiators only).

Designer Range

ROWSHAM HORIZONTAL

Pictured 89.0098 Matt White



Bar Dimensions (mm)

Vertical Bars 40 x 20mm



Pictured 89.0107 Matt Anthracite

Technical Tables & Drawings
Page 768-769

The Rowsham Horizontal is a designer radiator with stunning clean lines that complement any room.

Rowsham Horizontal - Matt White

Size H x W	Watts	BTU	Code	€ Ex VAT	€ Inc VAT
600 x 580mm	636	2171	89.0098	432.00	**531.36**
600 x 780mm	884	3017	89.0099	483.00	**594.09**
600 x 980mm	1140	3890	89.0100	553.00	**680.19**
600 x 1180mm	1401	4781	89.0101	643.00	**790.89**

Rowsham Horizontal - Matt Anthracite

Size H x W	Watts	BTU	Code	€ Ex VAT	€ Inc VAT
600 x 580mm	636	2171	89.0105	432.00	**531.36**
600 x 780mm	884	3017	89.0106	483.00	**594.09**
600 x 980mm	1140	3890	89.0107	553.00	**680.19**
600 x 1180mm	1401	4781	89.0108	643.00	**790.89**

FEATURES
- 40 x 20mm vertical bars
- Comes with pre-fitted flow diverter
- Tested to BS EN 442 standards
- 5 Year manufacturer's warranty*
- Not suitable for elements

* With conditions

Round Vent Caps
Page 741



TECHNICAL INFORMATION

All measurements in Height by Width. Heat output based on ▲T60˚C. For matching valves see pages 731-737. For indirect heating systems only. Tappings are the width of the rail and approx. 54mm off the wall. Price includes radiator and wall fixing sets, valves extra.

Warranty 5 Year

Heating



Optional Extra - Towel Hanger - Chrome

Description	Code	€ Ex VAT	€ Inc VAT
Towel Hanger 300mm	89.0112	98.00	**120.54**

Compatible with Vertical and Horizontal Radiators. Must be fitted before installation (horizontal radiators only).

Designer Range

ROWSHAM TOWEL RAIL



Pictured 89.1393 Matt White

Rear fixing metal wall brackets



Pictured 89.1396 Matt Anthracite

Bar Dimensions (mm)

Horizontal Bars 40 x 20mm

The Rowsham Towel Rail is a designer towel rail with stunning clean lines that has also high heat output.

Rowsham Towel Rail - Matt White

Size H x W	Watts	BTU	Element Output	Element Type	Code	€ Ex VAT	€ Inc VAT
800 x 500mm	581	1983	300W	A, A+, D, E, F, G	89.1388	304.00	**373.92**
800 x 600mm	627	2140	300W	A, A+, D, E, F, G	89.1389	350.00	**430.50**
1200 x 500mm	869	2966	450W	A, A+, D, E, F, G	89.1390	500.00	**615.00**
1200 x 600mm	938	3201	600W	A, A+, D, E, F, G	89.1391	579.00	**712.17**
1800 x 500mm	1331	4542	600W	A, A+, D, E, F, G	89.1392	692.00	**851.16**
1800 x 600mm	1437	4904	750W	A, A+, D, E, F, G	89.1393	801.00	**985.23**

Rowsham Towel Rail - Matt Anthracite

Size H x W	Watts	BTU	Element Output	Element Type	Code	€ Ex VAT	€ Inc VAT
800 x 500mm	581	1983	300W	A, A+, D, E, F, G	89.1394	304.00	**373.92**
800 x 600mm	627	2140	300W	A, A+, D, E, F, G	89.1395	350.00	**430.50**
1200 x 500mm	869	2966	450W	A, A+, D, E, F, G	89.1396	500.00	**615.00**
1200 x 600mm	938	3201	600W	A, A+, D, E, F, G	89.1397	579.00	**712.17**
1800 x 500mm	1331	4542	600W	A, A+, D, E, F, G	89.1398	692.00	**851.16**
1800 x 600mm	1437	4904	750W	A, A+, D, E, F, G	89.1399	801.00	**985.23**

Warranty 5 Year | Heating | All Electric | Dual-Fuel

TECHNICAL INFORMATION

All measurements in Height by Width. Heat output based on ▲T60˚C. Radiators that are electric only are restricted to the heat output of the elements. Element size can be increased to full capacity of rail if using element type D, E, F or G. For element types see pages 718-729. For matching valves see pages 731-737. For indirect heating systems only. Tappings are approx. 32mm less than the width of the rail and 83mm off the wall. Projection from wall is 139mm. Price includes radiator and wall fixing sets, valves extra.

Round Vent Caps
Page 741



Designer Range

TUNSTALL VERTICAL

Including new sizes



Bar Dimensions (mm)

Vertical Bars 50 x 25mm

Pictured 89.0008 Chrome & 101.0035 Towel Hanger

Warranty 5 Year

Heating

Create a fresh new look with this elegant designer radiator which will suit any room in the house. Available in four colour finishes.

FEATURES

- 50 x 25mm vertical bars
- Comes with pre-fitted flow diverter
- Tested to BS EN 442 standards
- 5 Year manufacturer's warranty*
- Not suitable for elements

* With conditions

Technical Tables & Drawings
Page 770-771

Round Vent Caps
Page 741



Robe Hooks
Page 738



Designer Range

Including new sizes

TUNSTALL VERTICAL

Matt White



Matt Anthracite

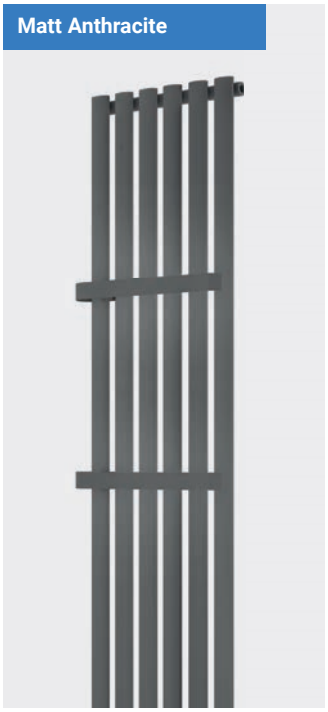

Matt Black

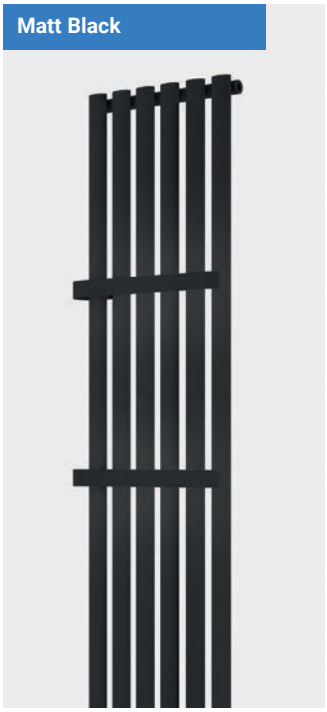

Chrome



Tunstall Vertical Radiators - Matt White

New Sizes

Size H x W	Watts	BTU	Element Output	Element Type	Code	€ Ex VAT	€ Inc VAT
1800 x 280mm	583	1990	N/A	N/A	89.0001	223.00	**274.29**
1800 x 350mm	750	2559	N/A	N/A	89.1620	265.00	**325.95**
1800 x 420mm	926	3160	N/A	N/A	89.0005	306.00	**376.38**
1800 x 490mm	1099	3750	N/A	N/A	89.1624	370.00	**455.10**
1800 x 560mm	1280	4368	N/A	N/A	89.1628	430.00	**528.90**
1800 x 630mm	1471	5020	N/A	N/A	89.0009	478.00	**587.94**

Tunstall Vertical Radiators - Matt Black

New Sizes

Size H x W	Watts	BTU	Element Output	Element Type	Code	€ Ex VAT	€ Inc VAT
1800 x 280mm	583	1990	N/A	N/A	89.0003	223.00	**274.29**
1800 x 350mm	750	2559	N/A	N/A	89.1622	265.00	**325.95**
1800 x 420mm	926	3160	N/A	N/A	89.0007	306.00	**376.38**
1800 x 490mm	1099	3750	N/A	N/A	89.1626	370.00	**455.10**
1800 x 560mm	1280	4368	N/A	N/A	89.1630	430.00	**528.90**
1800 x 630mm	1471	5020	N/A	N/A	89.0011	478.00	**587.94**

Tunstall Vertical Radiators - Matt Anthracite

New Sizes

Size H x W	Watts	BTU	Element Output	Element Type	Code	€ Ex VAT	€ Inc VAT
1800 x 280mm	583	1990	N/A	N/A	89.0002	223.00	**274.29**
1800 x 350mm	750	2559	N/A	N/A	89.1621	265.00	**325.95**
1800 x 420mm	926	3160	N/A	N/A	89.0006	306.00	**376.38**
1800 x 490mm	1099	3750	N/A	N/A	89.1625	370.00	**455.10**
1800 x 560mm	1280	4368	N/A	N/A	89.1629	430.00	**528.90**
1800 x 630mm	1471	5020	N/A	N/A	89.0010	478.00	**587.94**

Tunstall Vertical Radiators - Chrome

New Sizes

Size H x W	Watts	BTU	Element Output	Element Type	Code	€ Ex VAT	€ Inc VAT
1800 x 280mm	320	1092	N/A	N/A	89.0004	516.00	**634.68**
1800 x 350mm	423	1444	N/A	N/A	89.1623	558.00	**686.34**
1800 x 420mm	533	1819	N/A	N/A	89.0008	597.00	**734.31**
1800 x 490mm	644	2198	N/A	N/A	89.1627	663.00	**815.49**
1800 x 560mm	760	2594	N/A	N/A	89.1631	730.00	**897.90**
1800 x 630mm	890	3037	N/A	N/A	89.0012	789.00	**970.47**

TECHNICAL INFORMATION

All measurements in Height by Width. Heat output based on ▲T60˚C. For matching valves see pages 731-737. For indirect heating systems only. Tappings are the width of the rail and approx. 52mm off the wall. Price includes radiator and wall fixing sets, valves extra.

Vertical Tunstall Towel Hangers

New Sizes



Towel Hanger - Matt White

Size	Code	€ Ex VAT	€ Inc VAT
280mm	101.0028	80.00	**98.40**
350mm	89.1741	86.00	**105.78**
420mm	101.0032	97.00	**119.31**
490mm	89.1742	103.00	**126.69**
560mm	89.1743	107.00	**131.61**
630mm	101.0036	112.00	**137.76**



Towel Hanger - Matt Anthracite

Size	Code	€ Ex VAT	€ Inc VAT
280mm	101.0029	80.00	**98.40**
350mm	89.1744	86.00	**105.78**
420mm	101.0033	97.00	**119.31**
490mm	89.1745	103.00	**126.69**
560mm	89.1746	107.00	**131.61**
630mm	101.0037	112.00	**137.76**



Towel Hanger - Matt Black

Size	Code	€ Ex VAT	€ Inc VAT
280mm	101.0030	80.00	**98.40**
350mm	89.1747	86.00	**105.78**
420mm	101.0034	97.00	**119.31**
490mm	89.1748	103.00	**126.69**
560mm	89.1749	107.00	**131.61**
630mm	101.0038	112.00	**137.76**



Towel Hanger - Chrome

Size	Code	€ Ex VAT	€ Inc VAT
280mm	101.0031	86.00	**105.78**
350mm	89.1750	96.00	**118.08**
420mm	101.0035	105.00	**129.15**
490mm	89.1751	112.00	**137.76**
560mm	89.1752	115.00	**141.45**
630mm	101.0039	119.00	**146.37**

The Vertical Tunstall Towel Hangers can be fitted on both sides of the radiator (as left hand or right hand). Remember, these towel hangers must be fitted before installing on the wall. Must be fitted before installation!

Designer Range

TUNSTALL HORIZONTAL

Including new sizes



Pictured 89.0020 Matt Anthracite

Bar Dimensions (mm)

Vertical Bars 50 x 25mm

The eliptical shape of these tubes will provide a stylish focus to any room. Available in three colours.

FEATURES
- 50 x 25mm vertical bars
- Comes with pre-fitted flow diverter
- Tested to BS EN 442 standards
- 5 Year manufacturer's warranty*
- Not suitable for elements

* With conditions

Technical Tables & Drawings
Page 770-771

TECHNICAL INFORMATION

All measurements in Height by Width. Heat output based on ▲T60˚C. For matching valves see pages 731-737. For indirect heating systems only. Tappings are the width of the rail and approx. 52mm off the wall. Price includes radiator and wall fixing sets, valves extra.

Tunstall Horizontal Radiators - Matt White *New Sizes*

Size H x W	Watts	BTU	Element Output	Element Type	Code	€ Ex VAT	€ Inc VAT
600 x 471mm	399	1362	N/A	N/A	89.1632	182.00	**223.86**
600 x 589mm	509	1737	N/A	N/A	89.0013	203.00	**249.69**
600 x 648mm	565	1928	N/A	N/A	89.1635	223.00	**274.29**
600 x 825mm	742	2532	N/A	N/A	89.0016	276.00	**339.48**
600 x 1002mm	928	3167	N/A	N/A	89.0019	336.00	**413.28**
600 x 1061mm	1003	3423	N/A	N/A	89.1638	362.00	**445.26**
600 x 1179mm	1123	3832	N/A	N/A	89.0022	394.00	**484.62**

Tunstall Horizontal Radiators - Matt Anthracite *New Sizes*

Size H x W	Watts	BTU	Element Output	Element Type	Code	€ Ex VAT	€ Inc VAT
600 x 471mm	399	1362	N/A	N/A	89.1633	182.00	**223.86**
600 x 589mm	509	1737	N/A	N/A	89.0014	203.00	**249.69**
600 x 648mm	565	1928	N/A	N/A	89.1636	223.00	**274.29**
600 x 825mm	742	2532	N/A	N/A	89.0017	276.00	**339.48**
600 x 1002mm	928	3167	N/A	N/A	89.0020	336.00	**413.28**
600 x 1061mm	1003	3423	N/A	N/A	89.1639	362.00	**445.26**
600 x 1179mm	1123	3832	N/A	N/A	89.0023	394.00	**484.62**

Tunstall Horizontal Radiators - Matt Black *New Sizes*

Size H x W	Watts	BTU	Element Output	Element Type	Code	€ Ex VAT	€ Inc VAT
600 x 471mm	399	1362	N/A	N/A	89.1634	182.00	**223.86**
600 x 589mm	509	1737	N/A	N/A	89.0015	203.00	**249.69**
600 x 648mm	565	1928	N/A	N/A	89.1637	223.00	**274.29**
600 x 825mm	742	2532	N/A	N/A	89.0018	276.00	**339.48**
600 x 1002mm	928	3167	N/A	N/A	89.0021	336.00	**413.28**
600 x 1061mm	1003	3423	N/A	N/A	89.1640	362.00	**445.26**
600 x 1179mm	1123	3832	N/A	N/A	89.0024	394.00	**484.62**

Warranty 5 Year

Heating

Round Vent Caps
Page 741



Horizontal Tunstall Towel Hangers

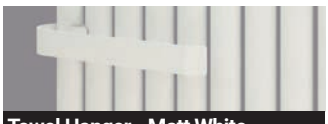

Towel Hanger - Matt White

Size	Code	€ Ex VAT	€ Inc VAT
330mm	101.0040	93.00	**114.39**
589mm	101.0044	112.00	**137.76**



Towel Hanger - Matt Anthracite

Size	Code	€ Ex VAT	€ Inc VAT
330mm	101.0041	93.00	**114.39**
589mm	101.0045	112.00	**137.76**



Towel Hanger - Matt Black

Size	Code	€ Ex VAT	€ Inc VAT
330mm	101.0042	93.00	**114.39**
589mm	101.0046	112.00	**137.76**

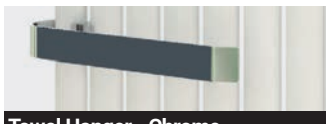

Towel Hanger - Chrome

Size	Code	€ Ex VAT	€ Inc VAT
330mm	101.0043	93.00	**114.39**
589mm	101.0047	119.00	**146.37**

The Horizontal Tunstall Towel Hangers can be fitted on both sides of the radiator (as left hand or right hand). Remember, these towel hangers must be fitted before installing on the wall. Must be fitted before installation!

Designer Range

Tunstall Towel Rails - Matt White

Size H x W	Watts	BTU	Element Output	Element Type	Code	€ Ex VAT	€ Inc VAT
560 x 1000mm	690	2355	300W	A, A+, D, E, F, G	89.0025	342.00	**420.66**
800 x 500mm	454	1550	150W	A, A+, D, E, F, G	89.0029	237.00	**291.51**
800 x 600mm	524	1788	300W	A, A+, D, E, F, G	89.0041	259.00	**318.57**
1200 x 500mm	663	2263	300W	A, A+, D, E, F, G	89.0033	357.00	**439.11**
1200 x 600mm	766	2614	450W	A, A+, D, E, F, G	89.0045	394.00	**484.62**
1600 x 500mm	879	3000	450W	A, A+, D, E, F, G	89.0037	440.00	**541.20**
1600 x 600mm	1015	3464	600W	A, A+, D, E, F, G	89.0049	497.00	**611.31**

Tunstall Towel Rails - Matt Anthracite

Size H x W	Watts	BTU	Element Output	Element Type	Code	€ Ex VAT	€ Inc VAT
560 x 1000mm	690	2355	300W	A, A+, D, E, F, G	89.0026	342.00	**420.66**
800 x 500mm	454	1550	150W	A, A+, D, E, F, G	89.0030	237.00	**291.51**
800 x 600mm	524	1788	300W	A, A+, D, E, F, G	89.0042	259.00	**318.57**
1200 x 500mm	663	2263	300W	A, A+, D, E, F, G	89.0034	357.00	**439.11**
1200 x 600mm	766	2614	450W	A, A+, D, E, F, G	89.0046	394.00	**484.62**
1600 x 500mm	879	3000	450W	A, A+, D, E, F, G	89.0038	440.00	**541.20**
1600 x 600mm	1015	3464	600W	A, A+, D, E, F, G	89.0050	497.00	**611.31**

Tunstall Towel Rails - Matt Black

Size H x W	Watts	BTU	Element Output	Element Type	Code	€ Ex VAT	€ Inc VAT
560 x 1000mm	690	2355	300W	A, A+, D, E, F, G	89.0027	342.00	**420.66**
800 x 500mm	454	1550	150W	A, A+, D, E, F, G	89.0031	237.00	**291.51**
800 x 600mm	524	1788	300W	A, A+, D, E, F, G	89.0043	259.00	**318.57**
1200 x 500mm	663	2263	300W	A, A+, D, E, F, G	89.0035	357.00	**439.11**
1200 x 600mm	766	2614	450W	A, A+, D, E, F, G	89.0047	394.00	**484.62**
1600 x 500mm	879	3000	450W	A, A+, D, E, F, G	89.0039	440.00	**541.20**
1600 x 600mm	1015	3464	600W	A, A+, D, E, F, G	89.0051	497.00	**611.31**

Tunstall Towel Rails - Chrome

Size H x W	Watts	BTU	Element Output	Element Type	Code	€ Ex VAT	€ Inc VAT
560 x 1000mm	431	1471	150W	A, A+, D, E, F, G	89.0028	502.00	**617.46**
800 x 500mm	284	970	150W	A, A+, D, E, F, G	89.0032	430.00	**528.90**
800 x 600mm	326	1113	150W	A, A+, D, E, F, G	89.0044	475.00	**584.25**
1200 x 500mm	431	1471	150W	A, A+, D, E, F, G	89.0036	514.00	**632.22**
1200 x 600mm	493	1683	300W	A, A+, D, E, F, G	89.0048	563.00	**692.49**
1600 x 500mm	579	1976	300W	A, A+, D, E, F, G	89.0040	647.00	**795.81**
1600 x 600mm	661	2256	300W	A, A+, D, E, F, G	89.0052	712.00	**875.76**

TECHNICAL INFORMATION

All measurements in Height by Width. Heat output based on ▲T60˚C. Radiators that are electric only are restricted to the heat output of the elements. Element size can be increased to full capacity of rail if using element type D, E, F or G. For element types see pages 718-729. For matching valves see pages 731-737. For indirect heating systems only. Tappings are approx. 46mm less than the width of the rail and approx. 83mm off the wall. Price includes radiator and wall fixing sets, valves extra.

Robe Hooks
Page 738



Round Vent Caps
Page 741



Warranty 5 Year

Heating

All Electric

Dual-Fuel



Pictured 89.0025 Matt White

560x1000mm size is the only horizontal Tunstall Towel Rail

TUNSTALL TOWEL RAILS



Pictured 89.0048 Chrome

Bar Dimensions (mm)
Horizontal Bars 50 x 25mm

FEATURES
- 50 x 25mm horizontal bars
- Tested to BS EN 442 standards
- 5 Year manufacturer's warranty*
- Stunning chrome finish option available

* With conditions

Technical Tables & Drawings
Page 770-771

Matt White



Matt Anthracite



Matt Black



Chrome



Designer Range

TUNSTALL DOUBLE VERTICAL

Including new sizes & new colour



Pictured 81.0142 Matt White

Bar Dimensions (mm)

Vertical Bars 50 x 25mm



Pictured 81.0159 Matt Anthracite

With its double vertical profile construction, Tunstall Double will create a fresh new look for any room in the house. Available in two colour finishes.

FEATURES
- 50 x 25mm vertical bars
- Double vertical profile construction
- Tested to BS EN 442 standards
- 5 Year manufacturer's warranty*
- Not suitable for elements

* With conditions

Technical Tables & Drawings
Page 770-771

TECHNICAL INFORMATION

All measurements in Height by Width. Heat output based on ▲T60˚C. For matching valves see pages 731-737. For indirect heating systems only. Tappings are the width of the rail and approx. 65mm off the wall. Projection from wall 104mm. Price includes radiator and wall fixing sets, valves extra.



Double profile construction

Warranty 5 Year

Heating

Round Vent Caps
Page 741

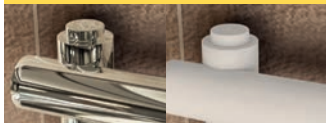

Tunstall Double Vertical Radiators - Matt White — *New Sizes*

Size H x W	Watts	BTU	Element Output	Element Type	Code	€ Ex VAT	€ Inc VAT
1800 x 280mm	952	3249	N/A	N/A	81.0140	329.00	**404.67**
1800 x 350mm	1190	4058	N/A	N/A	81.0190	415.00	**510.45**
1800 x 420mm	1429	4877	N/A	N/A	81.0141	490.00	**602.70**
1800 x 490mm	1666	5681	N/A	N/A	81.0193	555.00	**682.65**
1800 x 560mm	1904	6493	N/A	N/A	81.0196	646.00	**794.58**
1800 x 630mm	2142	7311	N/A	N/A	81.0142	735.00	**904.05**

Tunstall Double Vertical Radiators - Matt Anthracite — *New Sizes*

Size H x W	Watts	BTU	Element Output	Element Type	Code	€ Ex VAT	€ Inc VAT
1800 x 280mm	952	3249	N/A	N/A	81.0158	335.00	**412.05**
1800 x 350mm	1190	4058	N/A	N/A	81.0191	426.00	**523.98**
1800 x 420mm	1429	4877	N/A	N/A	81.0159	503.00	**618.69**
1800 x 490mm	1666	5681	N/A	N/A	81.0194	566.00	**696.18**
1800 x 560mm	1904	6493	N/A	N/A	81.0197	658.00	**809.34**
1800 x 630mm	2142	7311	N/A	N/A	81.0160	751.00	**923.73**

Tunstall Double Vertical Radiators - Matt Black — *New Colour*

Size H x W	Watts	BTU	Element Output	Element Type	Code	€ Ex VAT	€ Inc VAT
1800 x 280mm	952	3249	N/A	N/A	81.0172	335.00	**412.05**
1800 x 350mm	1190	4058	N/A	N/A	81.0192	426.00	**523.98**
1800 x 420mm	1429	4877	N/A	N/A	81.0173	503.00	**618.69**
1800 x 490mm	1666	5681	N/A	N/A	81.0195	566.00	**696.18**
1800 x 560mm	1904	6493	N/A	N/A	81.0198	658.00	**809.34**
1800 x 630mm	2142	7311	N/A	N/A	81.0174	751.00	**923.73**

Designer Range

Including new sizes & new colour

TUNSTALL DOUBLE HORIZONTAL

Bar Dimensions (mm)

Vertical Bars 50 x 25mm



Pictured 81.0137 Matt White

With its double vertical profile construction, Tunstall Double will provide a stylish focus to any room in the house. Available in two colour finishes.

FEATURES
- 50 x 25mm vertical bars
- Double vertical profile construction
- Tested to BS EN 442 standards
- 5 Year manufacturer's warranty*
- Not suitable for elements

* With conditions

Technical Tables & Drawings
Page 772-773

TECHNICAL INFORMATION

All measurements in Height by Width. Heat output based on ▲T60˚C. For matching valves see pages 731-737. For indirect heating systems only. Tappings are the width of the rail and approx. 65mm off the wall. Projection from wall 104mm. Price includes radiator and wall fixing sets, valves extra.

Tunstall Double Horizontal Radiators - Matt White — *New Sizes*

Size H x W	Watts	BTU	Element Output	Element Type	Code	€ Ex VAT	€ Inc VAT
600 x 471mm	734	2503	N/A	N/A	81.0199	287.00	**353.01**
600 x 589mm	818	2792	N/A	N/A	81.0136	357.00	**439.11**
600 x 648mm	1010	3444	N/A	N/A	81.0202	409.00	**503.07**
600 x 825mm	1145	3908	N/A	N/A	81.0137	500.00	**615.00**
600 x 1002mm	1391	4747	N/A	N/A	81.0138	604.00	**742.92**
600 x 1061mm	1652	5633	N/A	N/A	81.0205	656.00	**806.88**
600 x 1179mm	1836	6266	N/A	N/A	81.0139	707.00	**869.61**

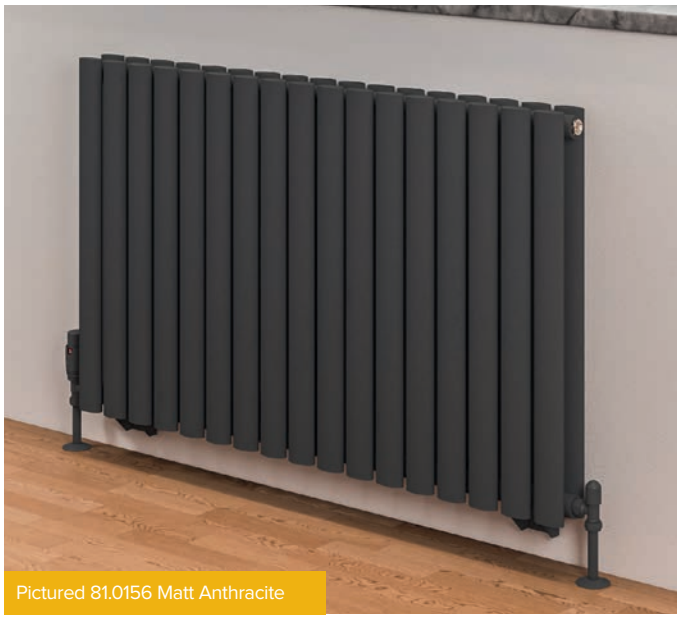

Pictured 81.0156 Matt Anthracite

Tunstall Double Horizontal Radiators - Matt Anthracite — *New Sizes*

Size H x W	Watts	BTU	Element Output	Element Type	Code	€ Ex VAT	€ Inc VAT
600 x 471mm	734	2503	N/A	N/A	81.0200	299.00	**367.77**
600 x 589mm	818	2792	N/A	N/A	81.0154	366.00	**450.18**
600 x 648mm	1010	3444	N/A	N/A	81.0203	420.00	**516.60**
600 x 825mm	1145	3908	N/A	N/A	81.0155	507.00	**623.61**
600 x 1002mm	1391	4747	N/A	N/A	81.0156	614.00	**755.22**
600 x 1061mm	1652	5633	N/A	N/A	81.0206	670.00	**824.10**
600 x 1179mm	1836	6266	N/A	N/A	81.0157	724.00	**890.52**

Tunstall Double Horizontal Radiators - Matt Black — *New Colour*

Size H x W	Watts	BTU	Element Output	Element Type	Code	€ Ex VAT	€ Inc VAT
600 x 471mm	734	2503	N/A	N/A	81.0201	299.00	**367.77**
600 x 589mm	818	2792	N/A	N/A	81.0175	366.00	**450.18**
600 x 648mm	1010	3444	N/A	N/A	81.0204	420.00	**516.60**
600 x 825mm	1145	3908	N/A	N/A	81.0176	507.00	**623.61**
600 x 1002mm	1391	4747	N/A	N/A	81.0177	614.00	**755.22**
600 x 1061mm	1652	5633	N/A	N/A	81.0207	670.00	**824.10**
600 x 1179mm	1836	6266	N/A	N/A	81.0178	724.00	**890.52**



Pictured 81.0175 Matt Black



Double profile construction

Multi-Purpose Towel Hangers
Page 740

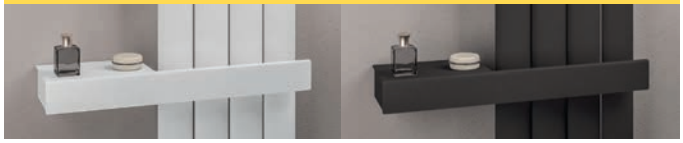

Warranty 5 Year

Heating

Round Vent Caps
Page 741



Designer Range

TUNSTALL DOUBLE TOWEL RAIL

Including new sizes & new colour



Pictured 81.0149 Matt White

Double horizontal profiles in elliptical shape of this towel rail will warm your towels and also your bathroom. Available in two colour options.

FEATURES
- 50 x 25mm horizontal bars
- Double horizontal profile construction
- Tested to BS EN 442 standards
- 5 Year manufacturer's warranty*
- Can be single, dual fuel or all electric

* With conditions

Technical Tables & Drawings
Page 772-773

Tunstall Double Towel Rails - Matt White

Size H x W	Watts	BTU	Element Output	Element Type	Code	€ Ex VAT	€ Inc VAT
560 x 1000mm	1060	3618	600W	A, A+, D, E, F, G	81.0149	482.00	**592.86**
800 x 500mm	620	2116	300W	A, A+, D, E, F, G	81.0143	374.00	**460.02**
800 x 600mm	742	2532	450W	A, A+, D, E, F, G	81.0146	398.00	**489.54**
1200 x 500mm	893	3048	450W	A, A+, D, E, F, G	81.0144	534.00	**656.82**
1200 x 600mm	1072	3659	600W	A, A+, D, E, F, G	81.0147	574.00	**706.02**
1600 x 500mm	1170	3993	600W	A, A+, D, E, F, G	81.0145	699.00	**859.77**
1600 x 600mm	1405	4795	750W	A, A+, D, E, F, G	81.0148	749.00	**921.27**

Tunstall Double Towel Rails - Matt Anthracite

Size H x W	Watts	BTU	Element Output	Element Type	Code	€ Ex VAT	€ Inc VAT
560 x 1000mm	1060	3618	600W	A, A+, D, E, F, G	81.0167	482.00	**592.86**
800 x 500mm	620	2116	300W	A, A+, D, E, F, G	81.0161	374.00	**460.02**
800 x 600mm	742	2532	450W	A, A+, D, E, F, G	81.0164	398.00	**489.54**
1200 x 500mm	893	3048	450W	A, A+, D, E, F, G	81.0162	534.00	**656.82**
1200 x 600mm	1072	3659	600W	A, A+, D, E, F, G	81.0165	574.00	**706.02**
1600 x 500mm	1170	3993	600W	A, A+, D, E, F, G	81.0163	699.00	**859.77**
1600 x 600mm	1405	4795	750W	A, A+, D, E, F, G	81.0166	749.00	**921.27**

Tunstall Double Towel Rails - Matt Black *New Colour*

Size H x W	Watts	BTU	Element Output	Element Type	Code	€ Ex VAT	€ Inc VAT
560 x 1000mm	1060	3618	600W	A, A+, D, E, F, G	81.0179	482.00	**592.86**
800 x 500mm	620	2116	300W	A, A+, D, E, F, G	81.0180	374.00	**460.02**
800 x 600mm	742	2532	450W	A, A+, D, E, F, G	81.0181	398.00	**489.54**
1200 x 500mm	893	3048	450W	A, A+, D, E, F, G	81.0182	534.00	**656.82**
1200 x 600mm	1072	3659	600W	A, A+, D, E, F, G	81.0183	574.00	**706.02**
1600 x 500mm	1170	3993	600W	A, A+, D, E, F, G	81.0184	699.00	**859.77**
1600 x 600mm	1405	4795	750W	A, A+, D, E, F, G	81.0185	749.00	**921.27**



Pictured 81.0162 Matt Anthracite

TECHNICAL INFORMATION

All measurements in Height by Width. Heat output based on ▲T60˚C. Radiators that are electric only are restricted to the heat output of the elements. Element size can be increased to full capacity of rail if using element type D, E, F or G. For element types see pages 718-729. For matching valves see pages 731-737. For indirect heating systems only. Tappings are approx. 46mm less than the width of the rail and approx. 70-75mm off the wall. Price includes radiator and wall fixing sets, valves extra.



Double profile construction

Round Vent Caps
Page 741



Designer Range

TUNSTALL MIRROR

Including new colour



Pictured 81.0169 Matt Anthracite

Technical Tables & Drawings
Page 772-773

Bar Dimensions (mm)
Vertical Bars 50 x 25mm

Profiles in elliptical shape of this radiator is in perfect harmony with the mirror placed in the middle. Available in two colour options.

FEATURES
- Single vertical profile construction, mirror width 145mm
- Tested to BS EN 442 standards
- 5 Year manufacturer's warranty*
- Not suitable for elements

* With conditions

Tunstall Mirror Radiators - Matt White

Size H x W	Watts	BTU	Element Output	Element Type	Code	€ Ex VAT	€ Inc VAT
1800 x 380mm	705	2406	N/A	N/A	81.0150	395.00	**485.85**
1800 x 500mm	1056	3604	N/A	N/A	81.0151	583.00	**717.09**

Tunstall Mirror Radiators - Matt Anthracite

Size H x W	Watts	BTU	Element Output	Element Type	Code	€ Ex VAT	€ Inc VAT
1800 x 380mm	705	2406	N/A	N/A	81.0168	395.00	**485.85**
1800 x 500mm	1056	3604	N/A	N/A	81.0169	583.00	**717.09**

Tunstall Mirror Radiators - Matt Black *New Colour*

Size H x W	Watts	BTU	Element Output	Element Type	Code	€ Ex VAT	€ Inc VAT
1800 x 380mm	705	2406	N/A	N/A	81.0186	395.00	**485.85**
1800 x 500mm	1056	3604	N/A	N/A	81.0187	583.00	**717.09**

TECHNICAL INFORMATION

All measurements in Height by Width. Heat output based on ▲T60˚C. For matching valves see pages 731-737. For indirect heating systems only. Tappings are the width of the rail and approx. 40mm off the wall. Projection from wall 79mm. Mirror width 145mm. Price includes radiator and wall fixing sets, valves extra.



Single profile construction

TUNSTALL DOUBLE MIRROR

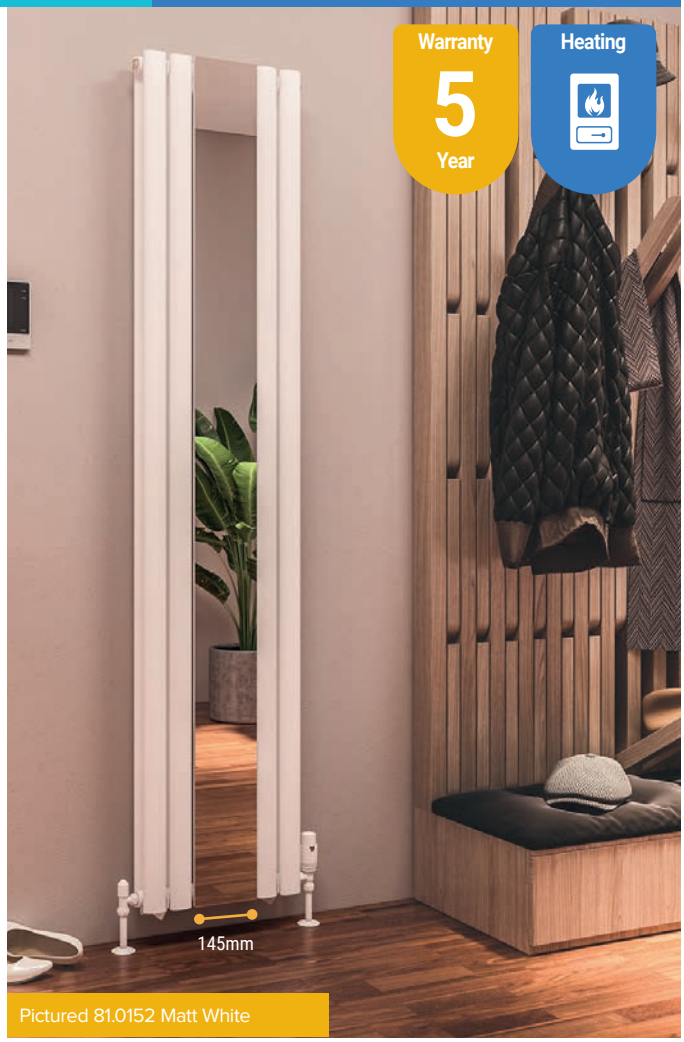

Pictured 81.0152 Matt White

Profiles in elliptical shape of this radiator is in perfect harmony with the mirror placed in the middle. Available in two colour options.

FEATURES
- Double vertical profile construction, mirror width 145mm
- Tested to BS EN 442 standards
- 5 Year manufacturer's warranty*
- Not suitable for elements

* With conditions

Tunstall Double Mirror Radiators - Matt White

Size H x W	Watts	BTU	Element Output	Element Type	Code	€ Ex VAT	€ Inc VAT
1800 x 380mm	1102	3761	N/A	N/A	81.0152	476.00	**585.48**
1800 x 500mm	1654	5645	N/A	N/A	81.0153	707.00	**869.61**

Tunstall Double Mirror Radiators - Matt Anthracite

Size H x W	Watts	BTU	Element Output	Element Type	Code	€ Ex VAT	€ Inc VAT
1800 x 380mm	1102	3761	N/A	N/A	81.0170	476.00	**585.48**
1800 x 500mm	1654	5645	N/A	N/A	81.0171	707.00	**869.61**

Tunstall Double Mirror Radiators - Matt Black *New Colour*

Size H x W	Watts	BTU	Element Output	Element Type	Code	€ Ex VAT	€ Inc VAT
1800 x 380mm	1102	3761	N/A	N/A	81.0188	476.00	**585.48**
1800 x 500mm	1654	5645	N/A	N/A	81.0189	707.00	**869.61**

TECHNICAL INFORMATION

All measurements in Height by Width. Heat output based on ▲T60˚C. For matching valves see pages 731-737. For indirect heating systems only. Tappings are the width of the rail and approx. 65mm off the wall. Projection from wall 104mm. Mirror width 145mm. Price includes radiator and wall fixing sets, valves extra.



Double profile construction

Designer Range

DEDDINGTON VERTICAL



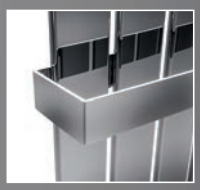

Pictured 89.0795 Chrome with 89.0848 Towel Hanger x2

Bar Dimensions (mm)

Vertical Bars 70 x 11mm



Pictured 89.1522 Matt Cobalt Blue

Flat and broad vertical profiles meet the perfect craftmanship. This vertical model is 1800mm high and available in 5 widths. (3 widths available for Matt Cobalt Blue colour) Towel hangers are same colours and widths as the radiators. (except Matt Cobalt Blue colour)

Deddington Vertical Radiators - Chrome

Size H x W	Watts	BTU	Element Output	Element Type	Code	€ Ex VAT	€ Inc VAT
1800 x 310mm	493	1683	N/A	N/A	89.0794	642.00	**789.66**
1800 x 390mm	611	2085	N/A	N/A	89.1523	768.00	**944.64**
1800 x 470mm	730	2491	N/A	N/A	89.0795	915.00	**1125.45**
1800 x 550mm	846	2887	N/A	N/A	89.1524	1010.00	**1242.30**
1800 x 630mm	962	3283	N/A	N/A	89.0796	1129.00	**1388.67**

Deddington Towel Hangers - Chrome

Description	Code	€ Ex VAT	€ Inc VAT
310mm	89.0847	83.00	**102.09**
390mm	89.1540	89.00	**109.47**
470mm	89.0848	93.00	**114.39**
550mm	89.1541	97.00	**119.31**
630mm	89.0849	101.00	**124.23**

*Towel hangers are only compatible with Deddington radiators. Radiators projection from wall 160mm when towel hanger is fitted. Max of 2 towel hangers can be fitted.
Must be fitted before installation.

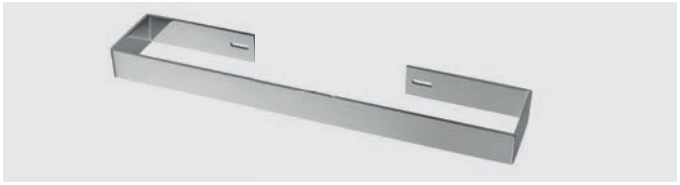

Deddington Vertical Radiators - Matt Cobalt Blue

Size H x W	Watts	BTU	Element Output	Element Type	Code	€ Ex VAT	€ Inc VAT
1800 x 310mm	812	2771	N/A	N/A	89.1520	507.00	**623.61**
1800 x 470mm	1231	4201	N/A	N/A	89.1521	723.00	**889.29**
1800 x 630mm	1649	5627	N/A	N/A	89.1522	891.00	**1095.93**

Warranty 5 Year

Heating

FEATURES
- 70 x 11mm vertical bars
- Single profile construction
- Tested to BS EN 442 standards
- 5 Year manufacturer's warranty*
- Not suitable for elements

* With conditions

Technical Tables & Drawings
Page 772-773

TECHNICAL INFORMATION

All measurements in Height by Width. Heat output based on ▲T60˚C. For matching valves see pages 731-737. For indirect heating systems only. Comes with built-in flow diverter. Tappings are the width of the rail and approx. 60mm off the wall. Projection from wall 100mm. Price includes radiator and wall fixing sets, valves extra.

Designer Range

DEDDINGTON VERTICAL



Pictured 89.0852 Gloss White with 89.0878 Towel Hanger x1



Pictured 89.0863 Matt Anthracite



Pictured 89.1516 Matt Black with 89.1536 Towel Hangers x2

Deddington Vertical Radiators - Gloss White

Size H x W	Watts	BTU	Code	€ Ex VAT	€ Inc VAT
1800 x 310mm	812	2771	89.0850	507.00	**623.61**
1800 x 390mm	1021	3484	89.1511	619.00	**761.37**
1800 x 470mm	1231	4201	89.0851	723.00	**889.29**
1800 x 550mm	1440	4914	89.1512	810.00	**996.30**
1800 x 630mm	1649	5627	89.0852	891.00	**1095.93**

Deddington Towel Hangers - Gloss White

Description	Code	€ Ex VAT	€ Inc VAT
310mm	89.0876	80.00	**98.40**
390mm	89.1531	83.00	**102.09**
470mm	89.0877	86.00	**105.78**
550mm	89.1532	90.00	**110.70**
630mm	89.0878	96.00	**118.08**

*Towel hangers are only compatible with Deddington radiators. Radiators projection from wall 160mm when towel hanger is fitted. Max of 2 towel hangers can be fitted.
Must be fitted before installation.

Deddington Vertical Radiators - Matt Anthracite

Size H x W	Watts	BTU	Code	€ Ex VAT	€ Inc VAT
1800 x 310mm	812	2771	89.0863	507.00	**623.61**
1800 x 390mm	1021	3484	89.1513	619.00	**761.37**
1800 x 470mm	1231	4201	89.0864	723.00	**889.29**
1800 x 550mm	1440	4914	89.1514	810.00	**996.30**
1800 x 630mm	1649	5627	89.0865	891.00	**1095.93**

Deddington Towel Hangers - Matt Anthracite

Description	Code	€ Ex VAT	€ Inc VAT
310mm	89.0879	80.00	**98.40**
390mm	89.1533	83.00	**102.09**
470mm	89.0880	86.00	**105.78**
550mm	89.1534	90.00	**110.70**
630mm	89.0881	96.00	**118.08**

*Towel hangers are only compatible with Deddington radiators. Radiators projection from wall 160mm when towel hanger is fitted. Max of 2 towel hangers can be fitted.
Must be fitted before installation.

Deddington Vertical Radiators - Matt Black

Size H x W	Watts	BTU	Code	€ Ex VAT	€ Inc VAT
1800 x 310mm	812	2771	89.1515	507.00	**623.61**
1800 x 390mm	1021	3484	89.1516	619.00	**761.37**
1800 x 470mm	1231	4201	89.1517	723.00	**889.29**
1800 x 550mm	1440	4914	89.1518	810.00	**996.30**
1800 x 630mm	1649	5627	89.1519	891.00	**1095.93**

Deddington Towel Hangers - Matt Black

Description	Code	€ Ex VAT	€ Inc VAT
310mm	89.1535	80.00	**98.40**
390mm	89.1536	83.00	**102.09**
470mm	89.1537	86.00	**105.78**
550mm	89.1538	90.00	**110.70**
630mm	89.1539	96.00	**118.08**

*Towel hangers are only compatible with Deddington radiators. Radiators projection from wall 160mm when towel hanger is fitted. Max of 2 towel hangers can be fitted.
Must be fitted before installation.







Designer Range

DEDDINGTON HORIZONTAL



Pictured 89.0800 Chrome

Rear fixing metal wall brackets

Flat and broad vertical profiles meet the perfect craftmanship. This horizontal model is available in 600mm height and 4 widths. This beautifully finished radiator will have all the attention in the room.

FEATURES
- 70 x 11mm vertical bars
- Rear fixing metal wall brackets
- Single profile construction
- Tested to BS EN 442 standards
- 5 Year manufacturer's warranty*
- Not suitable for elements

* With conditions

Technical Tables & Drawings
Page 774-775

TECHNICAL INFORMATION

All measurements in Height by Width. Heat output based on ▲T60˚C. For matching valves see pages 731-737. For indirect heating systems only. Comes with built-in flow diverter. Tappings are the width of the rail and approx. 60mm off the wall. Projection from wall 100mm. Price includes radiator and wall fixing sets, valves extra.

Deddington Horizontal Radiators - Chrome

Size H x W	Watts	BTU	Element Output	Element Type	Code	€ Ex VAT	€ Inc VAT
600 x 390mm	249	850	N/A	N/A	89.1507	363.00	**446.49**
600 x 470mm	296	1010	N/A	N/A	89.1508	425.00	**522.75**
600 x 550mm	343	1171	N/A	N/A	89.1509	482.00	**592.86**
600 x 630mm	390	1331	N/A	N/A	89.0797	545.00	**670.35**
600 x 790mm	483	1648	N/A	N/A	89.0798	651.00	**800.73**
600 x 950mm	574	1959	N/A	N/A	89.0799	737.00	**906.51**
600 x 1110mm	664	2266	N/A	N/A	89.1510	790.00	**971.70**
600 x 1270mm	755	2577	N/A	N/A	89.0800	836.00	**1028.28**



Pictured 89.1504 Matt Cobalt Blue

Deddington Horizontal Radiators - Matt Cobalt Blue

Size H x W	Watts	BTU	Code	€ Ex VAT	€ Inc VAT
600 x 630mm	602	2055	89.1503	430.00	**528.90**
600 x 790mm	754	2573	89.1504	514.00	**632.22**
600 x 950mm	907	3095	89.1505	581.00	**714.63**
600 x 1270mm	1212	4136	89.1506	661.00	**813.03**

Designer Range

DEDDINGTON HORIZONTAL

Bar Dimensions (mm)

Vertical Bars 70 x 11mm

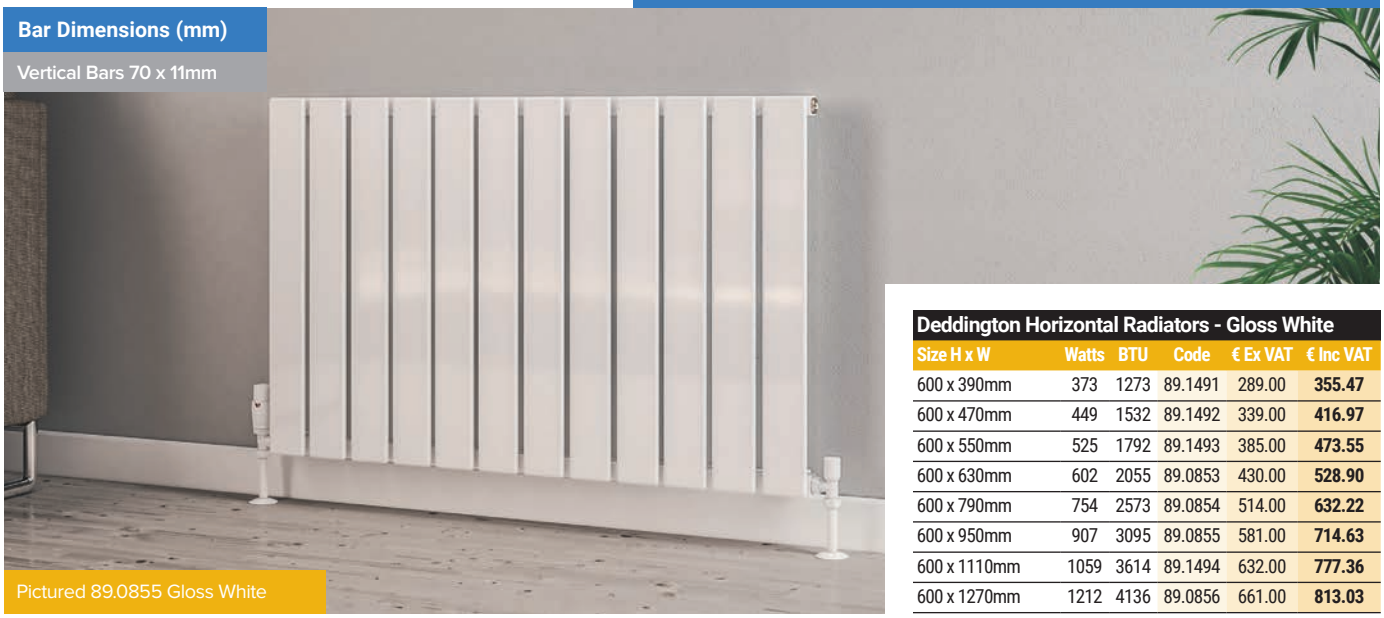

Pictured 89.0855 Gloss White

Deddington Horizontal Radiators - Gloss White

Size H x W	Watts	BTU	Code	€ Ex VAT	€ Inc VAT
600 x 390mm	373	1273	89.1491	289.00	**355.47**
600 x 470mm	449	1532	89.1492	339.00	**416.97**
600 x 550mm	525	1792	89.1493	385.00	**473.55**
600 x 630mm	602	2055	89.0853	430.00	**528.90**
600 x 790mm	754	2573	89.0854	514.00	**632.22**
600 x 950mm	907	3095	89.0855	581.00	**714.63**
600 x 1110mm	1059	3614	89.1494	632.00	**777.36**
600 x 1270mm	1212	4136	89.0856	661.00	**813.03**



Pictured 89.0867 Matt Anthracite

Deddington Horizontal Radiators - Matt Anthracite

Size H x W	Watts	BTU	Code	€ Ex VAT	€ Inc VAT
600 x 390mm	373	1273	89.1495	289.00	**355.47**
600 x 470mm	449	1532	89.1496	339.00	**416.97**
600 x 550mm	525	1792	89.1497	385.00	**473.55**
600 x 630mm	602	2055	89.0866	430.00	**528.90**
600 x 790mm	754	2573	89.0867	514.00	**632.22**
600 x 950mm	907	3095	89.0868	581.00	**714.63**
600 x 1110mm	1059	3614	89.1498	632.00	**777.36**
600 x 1270mm	1212	4136	89.0869	661.00	**813.03**



Pictured 89.1499 Matt Black

Magnetic Towel Hangers
Page 587

Deddington Horizontal Radiators - Matt Black

Size H x W	Watts	BTU	Code	€ Ex VAT	€ Inc VAT
600 x 630mm	602	2055	89.1499	430.00	**528.90**
600 x 790mm	754	2573	89.1500	514.00	**632.22**
600 x 950mm	907	3095	89.1501	581.00	**714.63**
600 x 1270mm	1212	4136	89.1502	661.00	**813.03**

Designer Range

DEDDINGTON TOWEL RAILS



Pictured 89.0804 Chrome

Rear fixing metal wall brackets

A designer towel rail in 5 finishes and with broad horizontal bars that is available in 3 heights and 2 widths.

FEATURES
- 70 x 11mm horizontal bars
- Rear fixing metal wall brackets
- Stunning chrome surface
- Single profile construction
- Tested to BS EN 442 standards
- 5 Year manufacturer's warranty*
- Can be single, dual fuel or all electric

* With conditions

Technical Tables & Drawings
Page 774-775

Warranty 5 Year | Heating | All Electric | Dual-Fuel



Pictured 89.0805 Chrome

Deddington Towel Rails - Chrome

Size H x W	Watts	BTU	Element Output	Element Type	Code	€ Ex VAT	€ Inc VAT
800 x 500mm	320	1092	150W	A, A+, D, E, F, G	89.0801	485.00	**596.55**
800 x 600mm	368	1256	150W	A, A+, D, E, F, G	89.0802	534.00	**656.82**
1200 x 500mm	457	1560	300W	A, A+, D, E, F, G	89.0803	632.00	**777.36**
1200 x 600mm	525	1792	300W	A, A+, D, E, F, G	89.0804	693.00	**852.39**
1800 x 500mm	646	2205	300W	A, A+, D, E, F, G	89.0805	901.00	**1108.23**
1800 x 600mm	743	2536	450W	A, A+, D, E, F, G	89.0806	990.00	**1217.70**

TECHNICAL INFORMATION

All measurements in Height by Width. Heat output based on ▲T60˚C. Radiators that are electric only are restricted to the heat output of the elements. Element size can be increased to full capacity of rail if using element type D, E, F or G. For element types see pages 718-729. For matching valves see pages 731-737. For indirect heating systems only. Tappings are 30mm less than the width of the rail and approx. 60mm off the wall. Projection from wall 100mm. Price includes radiator and wall fixing sets, valves extra.

Round Vent Caps
Page 741



Designer Range



Pictured 89.1528 Matt Cobalt Blue

DEDDINGTON TOWEL RAILS



Pictured 89.0871 Matt Anthracite

Deddington Towel Rails - Gloss White

Size H x W	Watts	BTU	Element Output	Element Type	Code	€ Ex VAT	€ Inc VAT
800 x 500mm	509	1737	150W	A, A+, D, E, F, G	89.0857	415.00	**510.45**
800 x 600mm	591	2017	300W	A, A+, D, E, F, G	89.0858	457.00	**562.11**
1200 x 500mm	725	2474	300W	A, A+, D, E, F, G	89.0859	538.00	**661.74**
1200 x 600mm	843	2877	300W	A, A+, D, E, F, G	89.0860	593.00	**729.39**
1800 x 500mm	1031	3518	450W	A, A+, D, E, F, G	89.0861	768.00	**944.64**
1800 x 600mm	1199	4091	450W	A, A+, D, E, F, G	89.0862	845.00	**1039.35**

Deddington Towel Rails - Matt Anthracite

Size H x W	Watts	BTU	Element Output	Element Type	Code	€ Ex VAT	€ Inc VAT
800 x 500mm	509	1737	150W	A, A+, D, E, F, G	89.0870	415.00	**510.45**
800 x 600mm	591	2017	300W	A, A+, D, E, F, G	89.0871	457.00	**562.11**
1200 x 500mm	725	2474	300W	A, A+, D, E, F, G	89.0872	538.00	**661.74**
1200 x 600mm	843	2877	300W	A, A+, D, E, F, G	89.0873	593.00	**729.39**
1800 x 500mm	1031	3518	450W	A, A+, D, E, F, G	89.0874	768.00	**944.64**
1800 x 600mm	1199	4091	450W	A, A+, D, E, F, G	89.0875	845.00	**1039.35**

Deddington Towel Rails - Matt Black

Size H x W	Watts	BTU	Element Output	Element Type	Code	€ Ex VAT	€ Inc VAT
800 x 500mm	509	1737	150W	A, A+, D, E, F, G	89.1525	415.00	**510.45**
1200 x 500mm	725	2474	300W	A, A+, D, E, F, G	89.1526	538.00	**661.74**
1800 x 500mm	1031	3518	450W	A, A+, D, E, F, G	89.1527	768.00	**944.64**

Deddington Towel Rails - Matt Cobalt Blue

Size H x W	Watts	BTU	Element Output	Element Type	Code	€ Ex VAT	€ Inc VAT
800 x 500mm	509	1737	150W	A, A+, D, E, F, G	89.1528	415.00	**510.45**
1200 x 500mm	725	2474	300W	A, A+, D, E, F, G	89.1529	538.00	**661.74**
1800 x 500mm	1031	3518	450W	A, A+, D, E, F, G	89.1530	768.00	**944.64**

Radiator Valves
Page 731-737



800mm High



1200mm High



1800mm High



Designer Range

ADDINGTON TYPE 10 - GLOSS WHITE



Pictured 91.0015 Gloss White (Fitted Vertically) & 91.0081 x2 Towel Hangers



Bar Dimensions (mm)

Vertical Bars 70 x 11mm

Pictured 91.0003 Gloss White (Fitted Vertically)



Towel Hangers
Page 591

Round Vent Caps
Page 741

HEATING NOTE: Radiators that are electric only are restricted to the heat output of the elements.

Pictured 91.0134 Gloss White (Fitted Vertically)

Designer Range

ADDINGTON TYPE 10 - GLOSS WHITE

A designer radiator range available to fit both vertically and horizontally designs in a gloss white finishes. Optional extras include flat style and double flat style towel hangers (see Page 591).

FEATURES

- Tested to BS EN 442 standards
- Single profile construction
- Maximum corrosion resistance
- Cataphoretic painting technology
- Can be installed vertically or horizontally
- Can be single, dual fuel or all electric (not all sizes
- 5 Year Manufacturer's Warranty*

* With conditions

Technical Tables & Drawings
Page 774-775



Pictured 91.0014 Gloss White (Fitted Horizontally)



Single profile construction

Radiator can be installed vertically or horizontally using the pre-fitted wall bracket holders. (Below images)



500mm Height

Addington Type 10 Vertical / Horizontal Radiators - Gloss White

Size H x W	Watts	BTU	Element Output	Element Type	Code	€ Ex VAT	€ Inc VAT
500 x 514mm	414	1413	150W	A, A+, C, E, H	91.0001	367.00	**451.41**
500 x 588mm	473	1614	300W	A, A+, C, E, H	91.0002	404.00	**496.92**

600mm Height

Addington Type 10 Vertical / Horizontal Radiators - Gloss White

Size H x W	Watts	BTU	Element Output	Element Type	Code	€ Ex VAT	€ Inc VAT
600 x 292mm	281	958	150W	A, A+	91.0127	287.00	**353.01**
600 x 366mm	351	1198	150W	A, A+	91.0128	324.00	**398.52**
600 x 440mm	421	1438	150W	A, A+, C, E, H	91.0129	357.00	**439.11**
600 x 514mm	492	1679	300W	A, A+, C, E, H	91.0003	395.00	**485.85**
600 x 588mm	562	1918	300W	A, A+, C, E, H	91.0004	429.00	**527.67**
600 x 662mm	632	2157	300W	A, A+, C, E, H	91.0130	468.00	**575.64**
600 x 810mm	772	2636	450W	A+, C, E, H	91.0131	535.00	**658.05**
600 x 1032mm	983	3355	600W	A, A+, C, E, H	91.0132	647.00	**795.81**
600 x 1180mm	1124	3834	600W	A, A+, C, E, H	91.0133	720.00	**885.60**
600 x 1254mm	1194	4073	600W	A, A+, C, E, H	91.0134	754.00	**927.42**

800mm Height

Addington Type 10 Vertical / Horizontal Radiators - Gloss White

Size H x W	Watts	BTU	Element Output	Element Type	Code	€ Ex VAT	€ Inc VAT
800 x 514mm	642	2191	300W	A, A+, C, H	91.0005	441.00	**542.43**
800 x 588mm	733	2501	450W	A, A+, C, H	91.0006	485.00	**596.55**

1000mm Height

Addington Type 10 Vertical / Horizontal Radiators - Gloss White

Size H x W	Watts	BTU	Element Output	Element Type	Code	€ Ex VAT	€ Inc VAT
1000 x 514mm	786	2682	450W	A, A+, C, H	91.0007	490.00	**602.70**
1000 x 588mm	898	3064	450W	A, A+, C, H	91.0008	535.00	**658.05**

1200mm Height

Addington Type 10 Vertical / Horizontal Radiators - Gloss White

Size H x W	Watts	BTU	Element Output	Element Type	Code	€ Ex VAT	€ Inc VAT
1200 x 514mm	923	3149	450W	A, A+, C, H	91.0009	535.00	**658.05**
1200 x 588mm	1055	3600	600W	A+, C, H	91.0010	594.00	**730.62**

1400mm Height

Addington Type 10 Vertical / Horizontal Radiators - Gloss White

Size H x W	Watts	BTU	Element Output	Element Type	Code	€ Ex VAT	€ Inc VAT
1400 x 514mm	1055	3600	600W	A+, C, H	91.0011	588.00	**723.24**
1400 x 588mm	1206	4115	600W	A+, C, H	91.0012	647.00	**795.81**

1800mm Height

Addington Type 10 Vertical / Horizontal Radiators - Gloss White

Size H x W	Watts	BTU	Element Output	Element Type	Code	€ Ex VAT	€ Inc VAT
1800 x 292mm	744	2539	N/A	N/A	91.0013	447.00	**549.81**
1800 x 366mm	931	3177	N/A	N/A	91.0014	530.00	**651.90**
1800 x 440mm	1117	3811	450W	A, A+	91.0015	604.00	**742.92**
1800 x 514mm	1303	4446	600W	A+	91.0016	678.00	**833.94**
1800 x 588mm	1489	5080	600W	A+	91.0017	758.00	**932.34**

TECHNICAL INFORMATION

All measurements in Height by Width. Heat output based on ▲T60˚C. Radiators that are electric only are restricted to the heat output of the elements. Element size can be increased to full capacity of rail if using element type C, E or H. For element types see pages 718-729. For matching valves see pages 731-737. Comes with pre-fitted flow diverter (except 500 & 600mm heights). Flow diverter must remain in place when radiator installed on central heating system (only for vertical installations). For indirect heating systems only. **In vertical installation**, tappings are the width of the rail and approx. 40mm off the wall. **In horizontal installation**, tappings are approx. 50mm less than the width of the rail and approx. 40mm off the wall. Price includes radiator and wall fixing sets, valves extra.

MAGNETIC TOWEL HANGERS



Round Magnetic Towel Hangers

Size	Colour	Code	€ Ex VAT	€ Inc VAT
600mm	Gloss White	101.0071	128.00	**157.44**
600mm	Chrome	101.0072	136.00	**167.28**



Square Magnetic Towel Hangers

Size	Colour	Code	€ Ex VAT	€ Inc VAT
600mm	Gloss White	101.0073	129.00	**158.67**
600mm	Chrome	101.0074	145.00	**178.35**

Both Round & Square towel hangers come in three unassembled pieces. Please cut 600mm bar to required column-to-column length. Holds up to 5kg weight.

Designer Range

ADDINGTON TYPE 10 - MATT ANTHRACITE



Pictured 91.0032 Matt Anthracite (Fitted Vertically) & 91.0111 Towel Hanger



Bar Dimensions (mm)

Vertical Bars 70 x 11mm

Pictured 91.0147 Matt Anthracite (Fitted Vertically) & 91.0086 Towel Hanger



Towel Hangers
Page 591

Round Vent Caps
Page 741

HEATING NOTE: Radiators that are electric only are restricted to the heat output of the elements.

Pictured 91.0049 Matt Anthracite (Fitted Vertically)

Designer Range

ADDINGTON TYPE 10 - MATT ANTHRACITE

A designer radiator range available to fit both vertically and horizontally designs in a matt anthracite finish. Optional extras include flat style and double flat style towel hangers (see Page 591).

FEATURES

- Tested to BS EN 442 standards
- Single profile construction
- Maximum corrosion resistance
- Cataphoretic painting technology
- Can be installed vertically or horizontally
- Can be single, dual fuel or all electric (not all sizes
- 5 Year Manufacturer's Warranty*

* With conditions

Technical Tables & Drawings
Page 774-775



Pictured 91.0032 (Fitted Horizontally)



Single profile construction

Radiator can be installed vertically or horizontally using the pre-fitted wall bracket holders. (Below images)



500mm Height

Addington Type 10 Vertical / Horizontal Radiators - Matt Anthracite

Size H x W	Watts	BTU	Element Output	Element Type	Code	€ Ex VAT	€ Inc VAT
500 x 514mm	414	1413	150W	A, A+, C, E, H	91.0018	367.00	**451.41**
500 x 588mm	473	1614	300W	A, A+, C, E, H	91.0019	404.00	**496.92**

600mm Height

Addington Type 10 Vertical / Horizontal Radiators - Matt Anthracite

Size H x W	Watts	BTU	Element Output	Element Type	Code	€ Ex VAT	€ Inc VAT
600 x 292mm	281	958	150W	A, A+	91.0145	287.00	**353.01**
600 x 366mm	351	1198	150W	A, A+	91.0146	324.00	**398.52**
600 x 440mm	421	1438	150W	A, A+, C, E, H	91.0147	357.00	**439.11**
600 x 514mm	492	1679	300W	A, A+, C, E, H	91.0020	395.00	**485.85**
600 x 588mm	562	1918	300W	A, A+, C, E, H	91.0021	429.00	**527.67**
600 x 662mm	632	2157	300W	A, A+, C, E, H	91.0148	468.00	**575.64**
600 x 810mm	772	2636	450W	A+, C, E, H	91.0149	535.00	**658.05**
600 x 1032mm	983	3355	600W	A, A+, C, E, H	91.0150	647.00	**795.81**
600 x 1180mm	1124	3834	600W	A, A+, C, E, H	91.0151	720.00	**885.60**
600 x 1254mm	1194	4073	600W	A, A+, C, E, H	91.0152	754.00	**927.42**

800mm Height

Addington Type 10 Vertical / Horizontal Radiators - Matt Anthracite

Size H x W	Watts	BTU	Element Output	Element Type	Code	€ Ex VAT	€ Inc VAT
800 x 514mm	642	2191	300W	A, A+, C, H	91.0022	441.00	**542.43**
800 x 588mm	733	2501	450W	A, A+, C, H	91.0023	485.00	**596.55**

1000mm Height

Addington Type 10 Vertical / Horizontal Radiators - Matt Anthracite

Size H x W	Watts	BTU	Element Output	Element Type	Code	€ Ex VAT	€ Inc VAT
1000 x 514mm	786	2682	450W	A, A+, C, H	91.0024	490.00	**602.70**
1000 x 588mm	898	3064	450W	A, A+, C, H	91.0025	535.00	**658.05**

1200mm Height

Addington Type 10 Vertical / Horizontal Radiators - Matt Anthracite

Size H x W	Watts	BTU	Element Output	Element Type	Code	€ Ex VAT	€ Inc VAT
1200 x 514mm	923	3149	450W	A, A+, C, H	91.0026	535.00	**658.05**
1200 x 588mm	1055	3600	600W	A+, C, H	91.0027	594.00	**730.62**

1400mm Height

Addington Type 10 Vertical / Horizontal Radiators - Matt Anthracite

Size H x W	Watts	BTU	Element Output	Element Type	Code	€ Ex VAT	€ Inc VAT
1400 x 514mm	1055	3600	600W	A+, C, H	91.0028	588.00	**723.24**
1400 x 588mm	1206	4115	600W	A+, C, H	91.0029	647.00	**795.81**

1800mm Height

Addington Type 10 Vertical / Horizontal Radiators - Matt Anthracite

Size H x W	Watts	BTU	Element Output	Element Type	Code	€ Ex VAT	€ Inc VAT
1800 x 292mm	744	2539	N/A	N/A	91.0030	447.00	**549.81**
1800 x 366mm	931	3177	N/A	N/A	91.0031	530.00	**651.90**
1800 x 440mm	1117	3811	450W	A, A+	91.0032	604.00	**742.92**
1800 x 514mm	1303	4446	600W	A+	91.0033	678.00	**833.94**
1800 x 588mm	1489	5080	600W	A+	91.0034	758.00	**932.34**

TECHNICAL INFORMATION

All measurements in Height by Width. Heat output based on ▲T60˚C. Radiators that are electric only are restricted to the heat output of the elements. Element size can be increased to full capacity of rail if using element type C, E or H. For element types see pages 718-729. For matching valves see pages 731-737. Comes with pre-fitted flow diverter (except 500 & 600mm heights). Flow diverter must remain in place when radiator installed on central heating system (only for vertical installations). For indirect heating systems only. In vertical installation, tappings are the width of the rail and approx. 40mm off the wall. In horizontal installation, tappings are approx. 50mm less than the width of the rail and approx. 40mm off the wall. Price includes radiator and wall fixing sets, valves extra.

MAGNETIC TOWEL HANGERS



Round Magnetic Towel Hangers

Size	Colour	Code	€ Ex VAT	€ Inc VAT
600mm	Gloss White	101.0071	128.00	**157.44**
600mm	Chrome	101.0072	136.00	**167.28**



Square Magnetic Towel Hangers

Size	Colour	Code	€ Ex VAT	€ Inc VAT
600mm	Gloss White	101.0073	129.00	**158.67**
600mm	Chrome	101.0074	145.00	**178.35**

Both Round & Square towel hangers come in three unassembled pieces.
Please cut 600mm bar to required column-to-column length.
Holds up to 5kg weight.

Designer Range

ADDINGTON TYPE 10 - TOWEL RAILS



Pictured 91.0065 Gloss White

A designer towel rail available in 3 heights and 2 widths in gloss white, matt anthracite colours.

FEATURES

- Tested to BS EN 442 standards
- Single profile construction
- Maximum corrosion resistance
- Cataphoretic painting technology
- Can be installed vertically or horizontally
- Can be single, dual fuel or all electric
- 5 Year Manufacturer's Warranty*

* With conditions

Technical Tables & Drawings
Page 776-777

TECHNICAL INFORMATION

All measurements in Height by Width. Heat output based on ▲T60˚C. Radiators that are electric only are restricted to the heat output of the elements. Element size can be increased to full capacity of rail if using element type D, E, F or G. For element types see pages 718-729. For matching valves see pages 731-737. For indirect heating systems only. Tappings are 50mm less than the width of the rail and approx. 40mm off the wall. Price includes radiator and wall fixing sets, valves extra.

Warranty 5 Year | Heating | All Electric | Dual-Fuel

790mm High



1110mm High



1750mm High



Addington Type 10 Towel Rails - Gloss White

Size H x W	Watts	BTU	Element Output	Element Type	Code	€ Ex VAT	€ Inc VAT
790 x 400mm	374	1276	150W	A, A+, D, E, F, G	91.0061	370.00	**455.10**
790 x 500mm	467	1593	150W	A, A+, D, E, F, G	91.0064	427.00	**525.21**
790 x 600mm	560	1911	300W	A, A+, D, E, F, G	91.0067	483.00	**594.09**
1110 x 400mm	492	1679	300W	A, A+, D, E, F, G	91.0062	549.00	**675.27**
1110 x 500mm	610	2081	300W	A, A+, D, E, F, G	91.0065	574.00	**706.02**
1110 x 600mm	731	2494	450W	A, A+, D, E, F, G	91.0068	597.00	**734.31**
1750 x 400mm	729	2487	450W	A, A+, D, E, F, G	91.0063	784.00	**964.32**
1750 x 500mm	885	3020	450W	A, A+, D, E, F, G	91.0066	817.00	**1004.91**
1750 x 600mm	1062	3624	600W	A, A+, D, E, F, G	91.0069	852.00	**1047.96**

Addington Type 10 Towel Rails - Matt Anthracite

Size H x W	Watts	BTU	Element Output	Element Type	Code	€ Ex VAT	€ Inc VAT
790 x 400mm	374	1276	150W	A, A+, D, E, F, G	91.0070	370.00	**455.10**
790 x 500mm	467	1593	150W	A, A+, D, E, F, G	91.0073	427.00	**525.21**
790 x 600mm	560	1911	300W	A, A+, D, E, F, G	91.0076	483.00	**594.09**
1110 x 400mm	492	1679	300W	A, A+, D, E, F, G	91.0071	549.00	**675.27**
1110 x 500mm	610	2081	300W	A, A+, D, E, F, G	91.0074	574.00	**706.02**
1110 x 600mm	731	2494	450W	A, A+, D, E, F, G	91.0077	597.00	**734.31**
1750 x 400mm	729	2487	450W	A, A+, D, E, F, G	91.0072	784.00	**964.32**
1750 x 500mm	885	3020	450W	A, A+, D, E, F, G	91.0075	817.00	**1004.91**
1750 x 600mm	1062	3624	600W	A, A+, D, E, F, G	91.0078	852.00	**1047.96**

Radiator Valves
Page 731-737



Round Vent Caps
Page 741



Designer Range

ADDINGTON TYPE 10
ADDINGTON ALUMINIUM TYPE 10
SINGLE FLAT STYLE TOWEL HANGERS



Type 10 - Single Flat Style Towel Hangers - Gloss White

Description	Code	€ Ex VAT	€ Inc VAT
Towel Hanger 292mm	91.0079	86.00	**105.78**
Towel Hanger 366mm	91.0080	87.00	**107.01**
Towel Hanger 440mm	91.0081	89.00	**109.47**
Towel Hanger 514mm	91.0082	91.00	**111.93**
Towel Hanger 588mm	91.0083	91.00	**111.93**



Type10 - Single Flat Style Towel Hangers - Matt Anthracite

Description	Code	€ Ex VAT	€ Inc VAT
Towel Hanger 292mm	91.0084	86.00	**105.78**
Towel Hanger 366mm	91.0085	87.00	**107.01**
Towel Hanger 440mm	91.0086	89.00	**109.47**
Towel Hanger 514mm	91.0087	91.00	**111.93**
Towel Hanger 588mm	91.0088	91.00	**111.93**



Type10 - Single Flat Style Towel Hangers - Chrome

Description	Code	€ Ex VAT	€ Inc VAT
Towel Hanger 292mm	91.0089	131.00	**161.13**
Towel Hanger 366mm	91.0090	133.00	**163.59**
Towel Hanger 440mm	91.0091	136.00	**167.28**
Towel Hanger 514mm	91.0092	138.00	**169.74**
Towel Hanger 588mm	91.0093	142.00	**174.66**

TECHNICAL DETAILS

The Single Flat Style Towel Hanger is compatible with both **vertical and horizontal installation**.

MUST BE FITTED BEFORE INSTALLATION!

Radiators projection from wall 119mm when towel hangers is fitted.

Hanger Fitting Widths
148/222/296/370/444mm



Installation Note: Single Flat Style Towel Hangers are not compatible with Deddington Vertical & Deddington Horizontal radiators.

ADDINGTON TYPE 10
ADDINGTON ALUMINIUM TYPE 10
DOUBLE FLAT STYLE TOWEL HANGERS



Type 10 - Double Flat Style Towel Hangers - Gloss White

Description	Code	€ Ex VAT	€ Inc VAT
Towel Hanger 292mm	91.0099	105.00	**129.15**
Towel Hanger 366mm	91.0100	108.00	**132.84**
Towel Hanger 440mm	91.0101	112.00	**137.76**
Towel Hanger 514mm	91.0102	114.00	**140.22**
Towel Hanger 588mm	91.0103	117.00	**143.91**



Type 10 - Double Flat Style Towel Hangers - Matt Anthracite

Description	Code	€ Ex VAT	€ Inc VAT
Towel Hanger 292mm	91.0104	105.00	**129.15**
Towel Hanger 366mm	91.0105	108.00	**132.84**
Towel Hanger 440mm	91.0106	112.00	**137.76**
Towel Hanger 514mm	91.0107	114.00	**140.22**
Towel Hanger 588mm	91.0108	117.00	**143.91**



Type10 - Double Flat Style Towel Hangers - Chrome

Description	Code	€ Ex VAT	€ Inc VAT
Towel Hanger 292mm	91.0109	166.00	**204.18**
Towel Hanger 366mm	91.0110	173.00	**212.79**
Towel Hanger 440mm	91.0111	175.00	**215.25**
Towel Hanger 514mm	91.0112	180.00	**221.40**
Towel Hanger 588mm	91.0113	184.00	**226.32**

TECHNICAL DETAILS

The Double Flat Style Towel Hanger is compatible with **vertical installation only**.

MUST BE FITTED BEFORE INSTALLATION!

Radiators projection from wall 119mm when towel hangers is fitted.

Hanger Fitting Widths
148/222/296/370/444mm



Installation Note: Double Flat Style Towel Hangers are not compatible with Deddington Vertical & Deddington Horizontal radiators.

Designer Range

ADDINGTON TYPE 20 - GLOSS WHITE



Pictured 91.0037 Gloss White (Fitted Vertically)

Bar Dimensions (mm)

Vertical Bars 70 x 11mm



Pictured 91.0137 Gloss White (Fitted Vertically) with 101.0071 Towel Hanger



HEATING NOTE: Radiators that are electric only are restricted to the heat output of the elements.

Pictured 91.0143 (Fitted Vertically)

Designer Range

ADDINGTON TYPE 20 - GLOSS WHITE

A designer radiator range available to fit both vertically and horizontally designs in a gloss white finish.

FEATURES
- Tested to BS EN 442 standards
- Double profile construction
- Maximum corrosion resistance
- Cataphoretic painting technology
- Can be installed vertically or horizontally
- Can be single, dual fuel or all electric
- 5 Year Manufacturer's Warranty*

* With conditions

Technical Tables & Drawings
Page 776-777



Pictured 91.0037 (Fitted Horizontally)

600mm Height

Addington Type 20 Vertical / Horizontal Radiators - Gloss White

Size H x W	Watts	BTU	Element Output	Element Type	Code	€ Ex VAT	€ Inc VAT
600 x 292mm	401	1369	150W	A, A+	91.0135	395.00	**485.85**
600 x 366mm	502	1712	300W	A, A+	91.0136	454.00	**558.42**
600 x 440mm	602	2054	300W	A, A+, C, H	91.0137	516.00	**634.68**
600 x 514mm	702	2396	300W	A, A+, C, H	91.0138	579.00	**712.17**
600 x 588mm	803	2738	450W	A, A+, C, H	91.0139	644.00	**792.12**
600 x 662mm	903	3081	450W	A, A+, C, H	91.0140	706.00	**868.38**
600 x 810mm	1104	3765	600W	A, A+, C, E, H	91.0141	829.00	**1019.67**
600 x 1032mm	1405	4792	750W	A, A+, C, E, H	91.0142	1021.00	**1255.83**
600 x 1180mm	1605	5477	900W	A, A+, C, E, H	91.0143	1144.00	**1407.12**
600 x 1254mm	1706	5819	1000W	A, A+, C, E, H	91.0144	1206.00	**1483.38**

1800mm Height

Addington Type 20 Vertical / Horizontal Radiators - Gloss White

Size H x W	Watts	BTU	Element Output	Element Type	Code	€ Ex VAT	€ Inc VAT
1800 x 366mm	1329	4535	300W	A, A+	91.0035	901.00	**1108.23**
1800 x 440mm	1595	5442	450W	A, A+	91.0036	1066.00	**1311.18**
1800 x 514mm	1861	6350	600W	A+	91.0037	1232.00	**1515.36**
1800 x 588mm	2127	7257	600W	A+	91.0038	1398.00	**1719.54**

TECHNICAL INFORMATION

All measurements in Height by Width. Heat output based on ▲T60˚C. Radiators that are electric only are restricted to the heat output of the elements. Element size can be increased to full capacity of rail if using element type C, E or H. For element types see pages 718-729. For matching valves see pages 731-737. Comes with pre-fitted flow diverter (except 500 & 600mm heights). Flow diverter must remain in place when radiator installed on central heating system(only for vertical installations). For indirect heating systems only. In vertical installation, tappings are the width of the rail and approx. 64mm off the wall. In horizontal installation, tappings are approx. 50mm less than the width of the rail and approx. 64mm off the wall. Price includes radiator and wall fixing sets, valves extra.



Double profile construction

Radiator can be installed vertically or horizontally using the pre-fitted wall bracket holders. (Below images)



Multi-Purpose Towel Hangers
Page 740

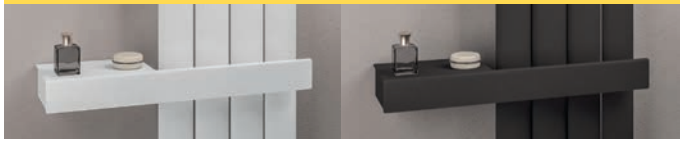

Radiator Valves
Page 731-737



Round Vent Caps
Page 741



MAGNETIC TOWEL HANGERS

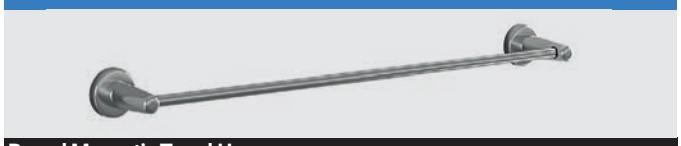

Round Magnetic Towel Hangers

Size	Colour	Code	€ Ex VAT	€ Inc VAT
600mm	Gloss White	101.0071	128.00	**157.44**
600mm	Chrome	101.0072	136.00	**167.28**



Square Magnetic Towel Hangers

Size	Colour	Code	€ Ex VAT	€ Inc VAT
600mm	Gloss White	101.0073	129.00	**158.67**
600mm	Chrome	101.0074	145.00	**178.35**

Both Round & Square towel hangers come in three unassembled pieces.
Please cut 600mm bar to required column-to-column length.
Holds up to 5kg weight.

Designer Range

ADDINGTON TYPE 20 - MATT ANTHRACITE



Pictured 91.0042 Matt Anthracite (Fitted Vertically)

Bar Dimensions (mm)

Vertical Bars 70 x 11mm



Pictured 91.0157 Matt Anthracite (Fitted Vertically) with 101.0074 Towel Hanger



HEATING NOTE: Radiators that are electric only are restricted to the heat output of the elements.

Pictured 91.0161 (Fitted Vertically)

Designer Range

ADDINGTON TYPE 20 - MATT ANTHRACITE

A designer radiator range available to fit both vertically and horizontally designs in a matt anthracite finish.

FEATURES
- Tested to BS EN 442 standards
- Double profile construction
- Maximum corrosion resistance
- Cataphoretic painting technology
- Can be installed vertically or horizontally
- Can be single, dual fuel or all electric
- 5 Year Manufacturer's Warranty*

* With conditions

Technical Tables & Drawings
Page 776-777



Pictured 91.0042 (Fitted Horizontally)

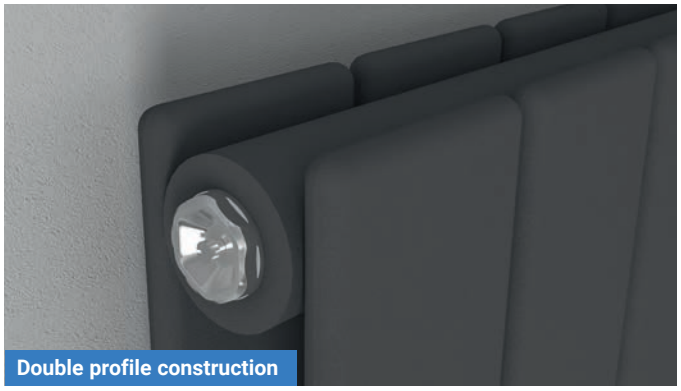

Double profile construction

Radiator can be installed vertically or horizontally using the pre-fitted wall bracket holders. (Below images)



600mm Height

Addington Type 20 Vertical / Horizontal Radiators - Matt Anthracite

Size H x W	Watts	BTU	Element Output	Element Type	Code	€ Ex VAT	€ Inc VAT
600 x 292mm	401	1369	150W	A, A+	91.0153	395.00	**485.85**
600 x 366mm	502	1712	300W	A, A+	91.0154	454.00	**558.42**
600 x 440mm	602	2054	300W	A, A+, C, H	91.0155	516.00	**634.68**
600 x 514mm	702	2396	300W	A, A+, C, H	91.0156	579.00	**712.17**
600 x 588mm	803	2738	450W	A, A+, C, H	91.0157	644.00	**792.12**
600 x 662mm	903	3081	450W	A, A+, C, H	91.0158	706.00	**868.38**
600 x 810mm	1104	3765	600W	A, A+, C, E, H	91.0159	829.00	**1019.67**
600 x 1032mm	1405	4792	750W	A, A+, C, E, H	91.0160	1021.00	**1255.83**
600 x 1180mm	1605	5477	900W	A, A+, C, E, H	91.0161	1144.00	**1407.12**
600 x 1254mm	1706	5819	1000W	A, A+, C, E, H	91.0162	1206.00	**1483.38**

1800mm Height

Addington Type 20 Vertical / Horizontal Radiators - Matt Anthracite

Size H x W	Watts	BTU	Element Output	Element Type	Code	€ Ex VAT	€ Inc VAT
1800 x 366mm	1329	4535	300W	A, A+	91.0039	901.00	**1108.23**
1800 x 440mm	1595	5442	450W	A, A+	91.0040	1066.00	**1311.18**
1800 x 514mm	1861	6350	600W	A+	91.0041	1232.00	**1515.36**
1800 x 588mm	2127	7257	600W	A+	91.0042	1398.00	**1719.54**

TECHNICAL INFORMATION

All measurements in Height by Width. Heat output based on ▲T60˚C. Radiators that are electric only are restricted to the heat output of the elements. Element size can be increased to full capacity of rail if using element type C, E or H. For element types see pages 718-729. For matching valves see pages 731-737. Comes with pre-fitted flow diverter (except 500 & 600mm heights). Flow diverter must remain in place when radiator installed on central heating system(only for vertical installations). For indirect heating systems only. In vertical installation, tappings are the width of the rail and approx. 64mm off the wall. In horizontal installation, tappings are approx. 50mm less than the width of the rail and approx. 64mm off the wall. Price includes radiator and wall fixing sets, valves extra.

Multi-Purpose Towel Hangers
Page 740

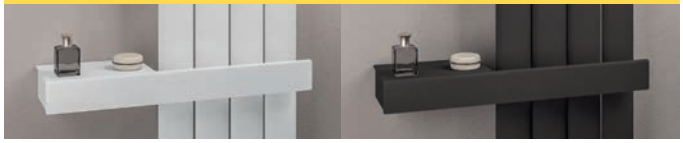

Radiator Valves
Page 731-737



Round Vent Caps
Page 741



MAGNETIC TOWEL HANGERS



Round Magnetic Towel Hangers

Size	Colour	Code	€ Ex VAT	€ Inc VAT
600mm	Gloss White	101.0071	128.00	**157.44**
600mm	Chrome	101.0072	136.00	**167.28**



Square Magnetic Towel Hangers

Size	Colour	Code	€ Ex VAT	€ Inc VAT
600mm	Gloss White	101.0073	129.00	**158.67**
600mm	Chrome	101.0074	145.00	**178.35**

Both Round & Square towel hangers come in three unassembled pieces.
Please cut 600mm bar to required column-to-column length.
Holds up to 5kg weight.

Designer Range

ADDINGTON TYPE21 - HORIZONTAL

High Output



Double profile construction with one row of convector fins

Warranty 5 Year

Heating

All Electric

Dual-Fuel

Technical Tables & Drawings
Page 778-779

HEATING NOTE: Radiators that are electric only are restricted to the heat output of the elements.

Pictured 91.0044 Gloss White

A horizontal only designer radiator range with high heat outputs in gloss white and matt anthracite finishes.

Addington Type21 Horizontal Radiators - Gloss White

Size H x W	Watts	BTU	Element Output	Element Type	Code	€ Ex VAT	€ Inc VAT
588 x 600mm	994	3392	600W	A+	91.0043	759.00	**933.57**
588 x 800mm	1325	4521	600W	A, A+	91.0044	922.00	**1134.06**
588 x 1000mm	1694	5780	600W	A, A+	91.0045	1048.00	**1289.04**
588 x 1200mm	1983	6766	600W	A, A+	91.0046	1242.00	**1527.66**

Addington Type21 Horizontal Radiators - Matt Anthracite

Size H x W	Watts	BTU	Element Output	Element Type	Code	€ Ex VAT	€ Inc VAT
588 x 600mm	994	3392	600W	A+	91.0047	759.00	**933.57**
588 x 800mm	1325	4521	600W	A, A+	91.0048	922.00	**1134.06**
588 x 1000mm	1694	5780	600W	A, A+	91.0049	1048.00	**1289.04**
588 x 1200mm	1983	6766	600W	A, A+	91.0050	1242.00	**1527.66**

FEATURES

- Tested to BS EN 442 standards
- Double profile construction with **one row of convector fins**
- Pre-fitted top grilles
- Maximum corrosion resistance
- Cataphoretic painting technology
- Can only be installed horizontally
- Can be single, dual fuel or all electric
- 5 Year Manufacturer's Warranty*

* With conditions

TECHNICAL INFORMATION

All measurements in Height by Width. Heat output based on ▲T60˚C. Radiators that are electric only are restricted to the heat output of the elements. For element types see pages 718-729. For matching valves see pages 731-737. For indirect heating systems only. Tappings are approx. 50mm less than the width of the rail and 75mm off the wall. Price includes radiator and wall fixing sets, valves extra.

Radiator Valves
Page 731-737



Round Vent Caps
Page 741



Designer Range

ADDINGTON TYPE22 - HORIZONTAL



Double profile construction with two rows of convector fins

Pictured 91.0060 Matt Anthracite

Addington Type22 Horizontal Radiators - Gloss White

Size H x W	Watts	BTU	Element Output	Element Type	Code	€ Ex VAT	€ Inc VAT
292 x 1200mm	1703	5811	N/A	N/A	91.0055	737.00	**906.51**
588 x 600mm	1252	4272	600W	A+	91.0051	810.00	**996.30**
588 x 800mm	1670	5698	600W	A, A+	91.0052	982.00	**1207.86**
588 x 1000mm	2099	7162	600W	A, A+	91.0053	1155.00	**1420.65**
588 x 1200mm	2519	8595	600W	A, A+	91.0054	1325.00	**1629.75**

Addington Type22 Horizontal Radiators - Matt Anthracite

Size H x W	Watts	BTU	Element Output	Element Type	Code	€ Ex VAT	€ Inc VAT
292 x 1200mm	1703	5811	N/A	N/A	91.0060	737.00	**906.51**
588 x 600mm	1252	4272	600W	A+	91.0056	810.00	**996.30**
588 x 800mm	1670	5698	600W	A, A+	91.0057	982.00	**1207.86**
588 x 1000mm	2099	7162	600W	A, A+	91.0058	1155.00	**1420.65**
588 x 1200mm	2519	8595	600W	A, A+	91.0059	1325.00	**1629.75**

FEATURES

- Tested to BS EN 442 standards
- Double profile construction with **two rows of convector fins**
- Pre-fitted top grilles
- Maximum corrosion resistance
- Cataphoretic painting technology
- Can only be installed horizontally
- Can be single, dual fuel or all electric
- 5 Year Manufacturer's Warranty*

* With conditions

TECHNICAL INFORMATION

All measurements in Height by Width. Heat output based on ▲T60˚C. Radiators that are electric only are restricted to the heat output of the elements. For element types see pages 718-729. For matching valves see pages 731-737. For indirect heating systems only. Tappings are approx. 50mm less than the width of the rail and 85mm off the wall. Price includes radiator and wall fixing sets, valves extra.

Radiator Valves
Page 731-737



Round Vent Caps
Page 741



Designer Range

ADDINGTON TYPE 20 - TOWEL RAILS



Pictured 91.0120 Gloss White

Double profile construction



1110mm High



1750mm High

A designer towel rail with high heat output, available in 2 heights in gloss white and matt anthracite colours.

FEATURES

- Tested to BS EN 442 standards
- Double profile construction
- Maximum corrosion resistance
- Cataphoretic painting technology
- Can be single, dual fuel or all electric
- 5 Year Manufacturer's Warranty*

* With conditions

Technical Tables & Drawings
Page 776-777

TECHNICAL INFORMATION

All measurements in Height by Width. Heat output based on ▲T60˚C. Radiators that are electric only are restricted to the heat output of the elements. Element size can be increased to full capacity of rail if using element type D, E, F or G. For element types see pages 718-729. For matching valves see pages 731-737. For indirect heating systems only. Tappings are 50mm less than the width of the rail and approx. 64mm off the wall. Price includes radiator and wall fixing sets, valves extra.

Addington Type 20 Towel Rails - Gloss White

Size H x W	Watts	BTU	Element Output	Element Type	Code	€ Ex VAT	€ Inc VAT
1110 x 500mm	826	2817	450W	A, A+, D, E, F, G	91.0119	845.00	**1039.35**
1750 x 500mm	1163	3966	600W	A, A+, D, E, F, G	91.0120	1209.00	**1487.07**

Addington Type 20 Towel Rails - Matt Anthracite

Size H x W	Watts	BTU	Element Output	Element Type	Code	€ Ex VAT	€ Inc VAT
1110 x 500mm	826	2817	450W	A, A+, D, E, F, G	91.0121	845.00	**1039.35**
1750 x 500mm	1163	3966	600W	A, A+, D, E, F, G	91.0122	1209.00	**1487.07**

Radiator Valves
Page 731-737



Round Vent Caps
Page 741



Designer Range

ADDINGTON TYPE 21 - TOWEL RAILS



Pictured 91.0125 Matt Anthracite

Double profile construction with one row of convector fins



1110mm High



1750mm High

A designer towel rail with high heat output, available in 2 heights in gloss white and matt anthracite colours.

FEATURES

- Tested to BS EN 442 standards
- Double profile construction with **one row of convector fins**
- Maximum corrosion resistance
- Cataphoretic painting technology
- Can be single, dual fuel or all electric
- 5 Year Manufacturer's Warranty*

* With conditions

Technical Tables & Drawings
Page 778-779

TECHNICAL INFORMATION

All measurements in Height by Width. Heat output based on ▲T60˚C. Radiators that are electric only are restricted to the heat output of the elements. Element size can be increased to full capacity of rail if using element type D, E, F or G. For element types see pages 718-729. For matching valves see pages 731-737. For indirect heating systems only. Tappings are 50mm less than the width of the rail and approx. 75mm off the wall. Price includes radiator and wall fixing sets, valves extra.

Addington Type 21 Towel Rails - Gloss White

Size H x W	Watts	BTU	Element Output	Element Type	Code	€ Ex VAT	€ Inc VAT
1110 x 500mm	1060	3615	600W	A, A+, D, E, F, G	91.0123	994.00	**1222.62**
1750 x 500mm	1455	4962	900W	A, A+, D, E, F, G	91.0124	1405.00	**1728.15**

Addington Type 21 Towel Rails - Matt Anthracite

Size H x W	Watts	BTU	Element Output	Element Type	Code	€ Ex VAT	€ Inc VAT
1110 x 500mm	1060	3615	600W	A, A+, D, E, F, G	91.0125	994.00	**1222.62**
1750 x 500mm	1455	4962	900W	A, A+, D, E, F, G	91.0126	1405.00	**1728.15**

Radiator Valves
Page 731-737



Round Vent Caps
Page 741



Flat Panel Range

WINGRAVE FLAT PANEL RADIATORS

1200mm High

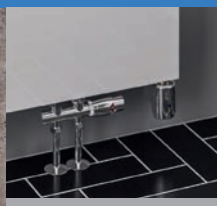

Available for Dual Fuel Installation

Pictured 89.1458 Gloss White with 89.1490 Towel Hangers x2 and 54.0005 TRV Valve

Rear fixing metal wall brackets

1200mm High

Comes with 50mm middle connection in addition to standard side connections.



Pictured 89.1468 Matt Anthracite with 89.1472 Towel Hangers x2 and 41.3021 TRV Valve

No more heavy & bulky panel radiators! A minimalist cover has been added to the Wingrave Towel Rail with built-in middle connection option. Also the stylish towel hangers will allow you to use this radiator in your bathroom as well as other rooms. Available in 2 heights and 3 colours.

FEATURES

- Tested to BS EN 442 standards
- Wingrave towel rail with with flat panel cover
- Rear fixing metal wall brackets
- Comes with 50mm middle connection in addition to standard side connections
- Dual fuel connection without T piece, element fits in either left or right bottom side connection
- Blanking plug and air vent are at the rear of the radiator
- Can only be installed vertically
- Can be single or dual fuel, or all electric
- 5 Year Manufacturer's Warranty*

*With conditions

Technical Tables & Drawings
Page 778-779

Warranty 5 Year

Heating

All Electric

Dual-Fuel

Flat Panel Range

WINGRAVE FLAT PANEL RADIATORS

Gloss White



Matt Anthracite



Matt Black



1200mm Height

Wingrave Flat Panel Radiators - Gloss White

Size H x W	Watts	BTU	Element Output	Element Type	Code	€ Ex VAT	€ Inc VAT
1200 x 310mm	470	1604	150W	A, A+, D, E, F, G	89.1455	346.00	**425.58**
1200 x 410mm	593	2023	300W	A, A+, D, E, F, G	89.1456	364.00	**447.72**
1200 x 510mm	716	2443	300W	A, A+, D, E, F, G	89.1457	395.00	**485.85**
1200 x 610mm	840	2866	450W	A, A+, D, E, F, G	89.1458	427.00	**525.21**

Wingrave Flat Panel Radiators - Matt Anthracite

Size H x W	Watts	BTU	Element Output	Element Type	Code	€ Ex VAT	€ Inc VAT
1200 x 310mm	470	1604	150W	A, A+, D, E, F, G	89.1467	374.00	**460.02**
1200 x 410mm	593	2023	300W	A, A+, D, E, F, G	89.1468	394.00	**484.62**
1200 x 510mm	716	2443	300W	A, A+, D, E, F, G	89.1469	427.00	**525.21**
1200 x 610mm	840	2866	450W	A, A+, D, E, F, G	89.1470	460.00	**565.80**

Wingrave Flat Panel Radiators - Matt Black

Size H x W	Watts	BTU	Element Output	Element Type	Code	€ Ex VAT	€ Inc VAT
1200 x 310mm	470	1604	150W	A, A+, D, E, F, G	89.1479	374.00	**460.02**
1200 x 410mm	593	2023	300W	A, A+, D, E, F, G	89.1480	394.00	**484.62**
1200 x 510mm	716	2443	300W	A, A+, D, E, F, G	89.1481	427.00	**525.21**
1200 x 610mm	840	2866	450W	A, A+, D, E, F, G	89.1482	460.00	**565.80**

1200mm High Rear View
Hidden air vent and blanking plug



TECHNICAL INFORMATION

All measurements in Height by Width. Heat output based on ▲T60˚C. Radiators that are electric only are restricted to the heat output of the elements. Element size can be increased to full capacity of rail if using element type D, E, F or G. For element types see pages 718-729. For matching valves see pages 731-737. For indirect heating systems only. Middle connection is 50mm. and and approx. 73mm off the wall. Side connections are 55mm less than the width of the rail and approx. 73mm off the wall. Price includes radiator and wall fixing sets, valves extra.

WINGRAVE FLAT PANEL TOWEL HANGERS



Towel Hanger - Gloss White

Size	Code	€ Ex VAT	€ Inc VAT
310mm	89.1459	66.00	**81.18**
410mm	89.1460	72.00	**88.56**
510mm	89.1461	82.00	**100.86**
610mm	89.1462	90.00	**110.70**



Towel Hanger - Matt Anthracite

Size	Code	€ Ex VAT	€ Inc VAT
310mm	89.1471	66.00	**81.18**
410mm	89.1472	72.00	**88.56**
510mm	89.1473	82.00	**100.86**
610mm	89.1474	90.00	**110.70**



Towel Hanger - Matt Black

Size	Code	€ Ex VAT	€ Inc VAT
310mm	89.1483	66.00	**81.18**
410mm	89.1484	72.00	**88.56**
510mm	89.1485	82.00	**100.86**
610mm	89.1486	90.00	**110.70**



Towel Hanger - Chrome

Size	Code	€ Ex VAT	€ Inc VAT
310mm	89.1487	66.00	**81.18**
410mm	89.1488	72.00	**88.56**
510mm	89.1489	82.00	**100.86**
610mm	89.1490	90.00	**110.70**

TECHNICAL INFORMATION

Vertical Radiators:

12000mm height radiators come with 2 towel hanger locations, with a maximum of 2 towel hangers - all widths; 300, 400, 500 and 600mm. Wingrave Flat Panel Towel Hangers are compatible with 1200mm height Wingrave Flat Panel Radiators.

Must be fitted before installation.

Flat Panel Range

WINGRAVE FLAT PANEL RADIATORS





No more heavy & bulky panel radiators! A minimalist cover has been added to the Wingrave Towel Rail with built-in middle connection option. Also the stylish towel hangers will allow you to use this radiator in your bathroom as well as other rooms. Available in 2 heights and 3 colours.

FEATURES

- Tested to BS EN 442 standards
- Wingrave towel rail with with flat panel cover
- Rear fixing metal wall brackets
- Comes with 50mm middle connection in addition to standard side connections
- Dual fuel connection without T piece, element fits in either left or right bottom side connection
- Blanking plug and air vent are at the rear of the radiator
- Can only be installed vertically
- Can be single or dual fuel, or all electric
- 5 Year Manufacturer's Warranty*

*With conditions

Technical Tables & Drawings
Page 778-779

Warranty 5 Year | Heating | All Electric | Dual-Fuel

Flat Panel Range

WINGRAVE FLAT PANEL RADIATORS

Gloss White



Matt Anthracite



Matt Black



1800mm Height

Wingrave Flat Panel Radiators - Gloss White

Size H x W	Watts	BTU	Element Output	Element Type	Code	€ Ex VAT	€ Inc VAT
1800 x 310mm	694	2368	300W	A, A+, D, E, F, G	89.1451	420.00	**516.60**
1800 x 410mm	874	2982	450W	A, A+, D, E, F, G	89.1452	453.00	**557.19**
1800 x 510mm	1054	3596	450W	A, A+, D, E, F, G	89.1453	506.00	**622.38**
1800 x 610mm	1234	4211	600W	A, A+, D, E, F, G	89.1454	560.00	**688.80**

Wingrave Flat Panel Radiators - Matt Anthracite

Size H x W	Watts	BTU	Element Output	Element Type	Code	€ Ex VAT	€ Inc VAT
1800 x 310mm	694	2368	300W	A, A+, D, E, F, G	89.1463	454.00	**558.42**
1800 x 410mm	874	2982	450W	A, A+, D, E, F, G	89.1464	490.00	**602.70**
1800 x 510mm	1054	3596	450W	A, A+, D, E, F, G	89.1465	546.00	**671.58**
1800 x 610mm	1234	4211	600W	A, A+, D, E, F, G	89.1466	605.00	**744.15**

Wingrave Flat Panel Radiators - Matt Black

Size H x W	Watts	BTU	Element Output	Element Type	Code	€ Ex VAT	€ Inc VAT
1800 x 310mm	694	2368	300W	A, A+, D, E, F, G	89.1475	454.00	**558.42**
1800 x 410mm	874	2982	450W	A, A+, D, E, F, G	89.1476	490.00	**602.70**
1800 x 510mm	1054	3596	450W	A, A+, D, E, F, G	89.1477	546.00	**671.58**
1800 x 610mm	1234	4211	600W	A, A+, D, E, F, G	89.1478	605.00	**744.15**

1800mm High Rear View
Hidden air vent and blanking plug

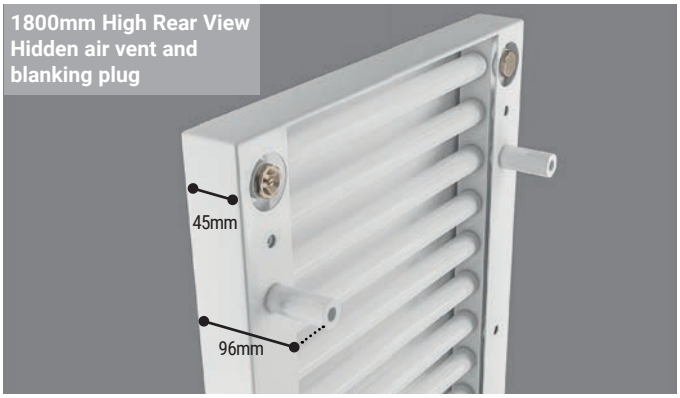

TECHNICAL INFORMATION

All measurements in Height by Width. Heat output based on ▲T60˚C. Radiators that are electric only are restricted to the heat output of the elements. Element size can be increased to full capacity of rail if using element type D, E, F or G. For element types see pages 718-729. For matching valves see pages 731-737. For indirect heating systems only. Middle connection is 50mm. and and approx. 73mm off the wall. Side connections are 55mm less than the width of the rail and approx. 73mm off the wall. Price includes radiator and wall fixing sets, valves extra.

WINGRAVE FLAT PANEL TOWEL HANGERS



Towel Hanger - Gloss White

Size	Code	€ Ex VAT	€ Inc VAT
310mm	89.1459	66.00	**81.18**
410mm	89.1460	72.00	**88.56**
510mm	89.1461	82.00	**100.86**
610mm	89.1462	90.00	**110.70**



Towel Hanger - Matt Anthracite

Size	Code	€ Ex VAT	€ Inc VAT
310mm	89.1471	66.00	**81.18**
410mm	89.1472	72.00	**88.56**
510mm	89.1473	82.00	**100.86**
610mm	89.1474	90.00	**110.70**



Towel Hanger - Matt Black

Size	Code	€ Ex VAT	€ Inc VAT
310mm	89.1483	66.00	**81.18**
410mm	89.1484	72.00	**88.56**
510mm	89.1485	82.00	**100.86**
610mm	89.1486	90.00	**110.70**



Towel Hanger - Chrome

Size	Code	€ Ex VAT	€ Inc VAT
310mm	89.1487	66.00	**81.18**
410mm	89.1488	72.00	**88.56**
510mm	89.1489	82.00	**100.86**
610mm	89.1490	90.00	**110.70**

TECHNICAL INFORMATION

Vertical Radiators:

1800mm height radiators come with 3 towel hanger locations, with a maximum of 3 towel hangers - all widths; 300, 400, 500 and 600mm. Wingrave Flat Panel Towel Hangers are compatible with 1800mm height Wingrave Flat Panel Radiators.

Must be fitted before installation.

Flat Panel Range

TYPE 11 FLAT PANEL RADIATORS



Pictured 44.0018 Gloss White

Combining single convector panel radiators, finished with smooth front & side panels and a top grille.

FEATURES

- Tested to BS EN 442 standards
- Single Flat Panel with one row of convector fins
- Pre-fitted top grilles and side cover panels
- Available in 3 heights and up to 8 widths
- Gloss White and 5 more colours in stock
- Can only be installed horizontally
- Not suitable for elements
- 5 Year Manufacturer's Warranty*

*With conditions

Technical Tables & Drawings
Page 780-781

Warranty 5 Year

Heating

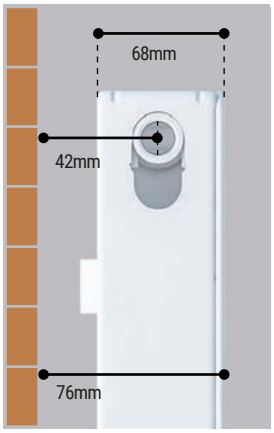

TECHNICAL INFORMATION

All measurements in Height by Width. Heat output based on ▲T60˚C. For matching valves see pages 731-737. For indirect heating systems only. Tappings are the width of the rail and approx. 42mm off the wall. Price includes radiator and wall fixing sets, valves extra.

400mm Height
Type 11 Flat Panel Radiators - Gloss White

Size H x W	Watts	BTU	Code	€ Ex VAT	€ Inc VAT
400 x 600mm	439	1497	44.0001	192.00	**236.16**
400 x 800mm	586	1998	44.0002	226.00	**277.98**
400 x 1000mm	733	2500	44.0003	258.00	**317.34**
400 x 1200mm	881	3005	44.0004	300.00	**369.00**
400 x 1400mm	1027	3502	44.0005	334.00	**410.82**
400 x 1600mm	1175	4007	44.0006	374.00	**460.02**

500mm Height
Type 11 Flat Panel Radiators - Gloss White

Size H x W	Watts	BTU	Code	€ Ex VAT	€ Inc VAT
500 x 400mm	360	1225	44.0007	167.00	**205.41**
500 x 600mm	541	1844	44.0008	208.00	**255.84**
500 x 800mm	722	2460	44.0009	250.00	**307.50**
500 x 1000mm	903	3080	44.0010	289.00	**355.47**
500 x 1200mm	1085	3699	44.0011	332.00	**408.36**
500 x 1400mm	1266	4315	44.0012	376.00	**462.48**
500 x 1600mm	1447	4934	44.0013	420.00	**516.60**

600mm Height
Type 11 Flat Panel Radiators - Gloss White

Size H x W	Watts	BTU	Code	€ Ex VAT	€ Inc VAT
600 x 400mm	424	1443	44.0014	185.00	**227.55**
600 x 600mm	638	2174	44.0015	236.00	**290.28**
600 x 800mm	851	2901	44.0016	282.00	**346.86**
600 x 1000mm	1064	3628	44.0017	331.00	**407.13**
600 x 1200mm	1277	4354	44.0018	381.00	**468.63**
600 x 1400mm	1490	5081	44.0019	430.00	**528.90**
600 x 1600mm	1705	5812	44.0020	485.00	**596.55**
600 x 1800mm	1918	6538	44.0021	530.00	**651.90**

Flat Panel Range

TYPE 11 FLAT PANEL RADIATORS

COMPLETE THE LOOK

Pictured below:
Angled Thermostatic Valves

Page: 732-737









600mm Height

Type 11 Flat Panel Radiators - Matt White

Size H x W	Watts	BTU	Code	€ Ex VAT	€ Inc VAT
600 x 400mm	424	1443	44.0022	205.00	**252.15**
600 x 600mm	638	2174	44.0023	255.00	**313.65**
600 x 800mm	851	2901	44.0024	308.00	**378.84**
600 x 1000mm	1064	3628	44.0025	363.00	**446.49**
600 x 1200mm	1277	4354	44.0026	415.00	**510.45**
600 x 1400mm	1490	5081	44.0027	474.00	**583.02**
600 x 1600mm	1705	5812	44.0028	531.00	**653.13**



600mm Height

Type 11 Flat Panel Radiators - Matt Grey

Size H x W	Watts	BTU	Code	€ Ex VAT	€ Inc VAT
600 x 400mm	424	1443	44.0029	205.00	**252.15**
600 x 600mm	638	2174	44.0030	255.00	**313.65**
600 x 800mm	851	2901	44.0031	308.00	**378.84**
600 x 1000mm	1064	3628	44.0032	363.00	**446.49**
600 x 1200mm	1277	4354	44.0033	415.00	**510.45**
600 x 1400mm	1490	5081	44.0034	474.00	**583.02**
600 x 1600mm	1705	5812	44.0035	531.00	**653.13**



600mm Height

Type 11 Flat Panel Radiators - Matt Cappuccino

Size H x W	Watts	BTU	Code	€ Ex VAT	€ Inc VAT
600 x 400mm	424	1443	44.0036	205.00	**252.15**
600 x 600mm	638	2174	44.0037	255.00	**313.65**
600 x 800mm	851	2901	44.0038	308.00	**378.84**
600 x 1000mm	1064	3628	44.0039	363.00	**446.49**
600 x 1200mm	1277	4354	44.0040	415.00	**510.45**
600 x 1400mm	1490	5081	44.0041	474.00	**583.02**
600 x 1600mm	1705	5812	44.0042	531.00	**653.13**



600mm Height

Type 11 Flat Panel Radiators - Matt Anthracite

Size H x W	Watts	BTU	Code	€ Ex VAT	€ Inc VAT
600 x 400mm	424	1443	44.0043	205.00	**252.15**
600 x 600mm	638	2174	44.0044	255.00	**313.65**
600 x 800mm	851	2901	44.0045	308.00	**378.84**
600 x 1000mm	1064	3628	44.0046	363.00	**446.49**
600 x 1200mm	1277	4354	44.0047	415.00	**510.45**
600 x 1400mm	1490	5081	44.0048	474.00	**583.02**
600 x 1600mm	1705	5812	44.0049	531.00	**653.13**

MAGNETIC TOWEL HANGERS



Round Magnetic Towel Hangers

Size	Colour	Code	€ Ex VAT	€ Inc VAT
600mm	Gloss White	101.0071	128.00	**157.44**
600mm	Chrome	101.0072	136.00	**167.28**



Square Magnetic Towel Hangers

Size	Colour	Code	€ Ex VAT	€ Inc VAT
600mm	Gloss White	101.0073	129.00	**158.67**
600mm	Chrome	101.0074	145.00	**178.35**



600mm Height

Type 11 Flat Panel Radiators - Matt Black

Size H x W	Watts	BTU	Code	€ Ex VAT	€ Inc VAT
600 x 400mm	424	1443	44.0050	205.00	**252.15**
600 x 600mm	638	2174	44.0051	255.00	**313.65**
600 x 800mm	851	2901	44.0052	308.00	**378.84**
600 x 1000mm	1064	3628	44.0053	363.00	**446.49**
600 x 1200mm	1277	4354	44.0054	415.00	**510.45**
600 x 1400mm	1490	5081	44.0055	474.00	**583.02**
600 x 1600mm	1705	5812	44.0056	531.00	**653.13**

Flat Panel Range

TYPE 22 FLAT PANEL RADIATORS



Pictured 44.0073 Gloss White

Combining double convector panel radiators, finished with smooth front & side panels and a top grille.

FEATURES
- Tested to BS EN 442 standards
- Double Flat Panels with two rows of convector fins
- Pre-fitted top grilles and side cover panels
- Available in 3 heights and up to 8 widths
- Gloss White and 5 more colours in stock
- Can only be installed horizontally
- Not suitable for elements
- 5 Year Manufacturer's Warranty*

*With conditions

Technical Tables & Drawings
Page 780-781

Warranty 5 Year

Heating

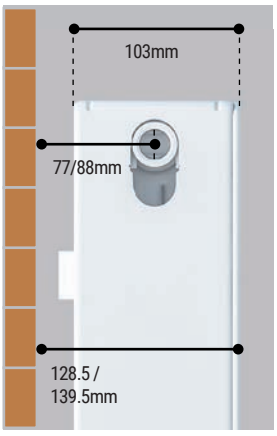

TECHNICAL INFORMATION

All measurements in Height by Width. Heat output based on ▲T60˚C. For matching valves see pages 731-737. For indirect heating systems only. Tappings are the width of the rail and approx. 77/88mm off the wall. Price includes radiator and wall fixing sets, valves extra.

400mm Height
Type 22 Flat Panel Radiators - Gloss White

Size H x W	Watts	BTU	Code	€ Ex VAT	€ Inc VAT
400 x 600mm	815	2779	44.0057	266.00	**327.18**
400 x 800mm	1085	3699	44.0058	331.00	**407.13**
400 x 1000mm	1354	4616	44.0059	392.00	**482.16**
400 x 1200mm	1624	5536	44.0060	458.00	**563.34**
400 x 1400mm	1894	6456	44.0061	524.00	**644.52**
400 x 1600mm	2161	7369	44.0062	590.00	**725.70**

500mm Height
Type 22 Flat Panel Radiators - Gloss White

Size H x W	Watts	BTU	Code	€ Ex VAT	€ Inc VAT
500 x 400mm	647	2206	44.0063	227.00	**279.21**
500 x 600mm	973	3316	44.0064	301.00	**370.23**
500 x 800mm	1297	4422	44.0065	378.00	**464.94**
500 x 1000mm	1623	5532	44.0066	451.00	**554.73**
500 x 1200mm	1947	6639	44.0067	524.00	**644.52**
500 x 1400mm	2272	7745	44.0068	604.00	**742.92**
500 x 1600mm	2597	8855	44.0069	678.00	**833.94**

600mm Height
Type 22 Flat Panel Radiators - Gloss White

Size H x W	Watts	BTU	Code	€ Ex VAT	€ Inc VAT
600 x 400mm	765	2607	44.0070	259.00	**318.57**
600 x 600mm	1147	3910	44.0071	350.00	**318.57**
600 x 800mm	1529	5214	44.0072	441.00	**542.43**
600 x 1000mm	1911	6517	44.0073	527.00	**648.21**
600 x 1200mm	2294	7820	44.0074	621.00	**763.83**
600 x 1400mm	2676	9124	44.0075	709.00	**872.07**
600 x 1600mm	3058	10427	44.0076	804.00	**988.92**
600 x 1800mm	3440	11730	44.0077	888.00	**1092.24**

Flat Panel Range

TYPE 22 FLAT PANEL RADIATORS

COMPLETE THE LOOK

Pictured below:
Angled Thermostatic Valves

Page: 732-737









600mm Height

Type 22 Flat Panel Radiators - Matt White

Size H x W	Watts	BTU	Code	€ Ex VAT	€ Inc VAT
600 x 400mm	765	2607	44.0078	289.00	**355.47**
600 x 600mm	1147	3910	44.0079	384.00	**472.32**
600 x 800mm	1529	5214	44.0080	485.00	**596.55**
600 x 1000mm	1911	6517	44.0081	580.00	**713.40**
600 x 1200mm	2294	7820	44.0082	681.00	**837.63**
600 x 1400mm	2676	9124	44.0083	783.00	**963.09**
600 x 1600mm	3058	10427	44.0084	882.00	**1084.86**



600mm Height

Type 22 Flat Panel Radiators - Matt Grey

Size H x W	Watts	BTU	Code	€ Ex VAT	€ Inc VAT
600 x 400mm	765	2607	44.0085	289.00	**355.47**
600 x 600mm	1147	3910	44.0086	384.00	**472.32**
600 x 800mm	1529	5214	44.0087	485.00	**596.55**
600 x 1000mm	1911	6517	44.0088	580.00	**713.40**
600 x 1200mm	2294	7820	44.0089	681.00	**837.63**
600 x 1400mm	2676	9124	44.0090	783.00	**963.09**
600 x 1600mm	3058	10427	44.0091	882.00	**1084.86**



600mm Height

Type 22 Flat Panel Radiators - Matt Cappuccino

Size H x W	Watts	BTU	Code	€ Ex VAT	€ Inc VAT
600 x 400mm	765	2607	44.0092	289.00	**355.47**
600 x 600mm	1147	3910	44.0093	384.00	**472.32**
600 x 800mm	1529	5214	44.0094	485.00	**596.55**
600 x 1000mm	1911	6517	44.0095	580.00	**713.40**
600 x 1200mm	2294	7820	44.0096	681.00	**837.63**
600 x 1400mm	2676	9124	44.0097	783.00	**963.09**
600 x 1600mm	3058	10427	44.0098	882.00	**1084.86**



600mm Height

Type 22 Flat Panel Radiators - Matt Anthracite

Size H x W	Watts	BTU	Code	€ Ex VAT	€ Inc VAT
600 x 400mm	765	2607	44.0099	289.00	**355.47**
600 x 600mm	1147	3910	44.0100	384.00	**472.32**
600 x 800mm	1529	5214	44.0101	485.00	**596.55**
600 x 1000mm	1911	6517	44.0102	580.00	**713.40**
600 x 1200mm	2294	7820	44.0103	681.00	**837.63**
600 x 1400mm	2676	9124	44.0104	783.00	**963.09**
600 x 1600mm	3058	10427	44.0105	882.00	**1084.86**

MAGNETIC TOWEL HANGERS



Round Magnetic Towel Hangers

Size	Colour	Code	€ Ex VAT	€ Inc VAT
600mm	Gloss White	101.0071	128.00	**157.44**
600mm	Chrome	101.0072	136.00	**167.28**



Square Magnetic Towel Hangers

Size	Colour	Code	€ Ex VAT	€ Inc VAT
600mm	Gloss White	101.0073	129.00	**158.67**
600mm	Chrome	101.0074	145.00	**178.35**



600mm Height

Type 22 Flat Panel Radiators - Matt Black

Size H x W	Watts	BTU	Code	€ Ex VAT	€ Inc VAT
600 x 400mm	765	2607	44.0106	289.00	**355.47**
600 x 600mm	1147	3910	44.0107	384.00	**472.32**
600 x 800mm	1529	5214	44.0108	485.00	**596.55**
600 x 1000mm	1911	6517	44.0109	580.00	**713.40**
600 x 1200mm	2294	7820	44.0110	681.00	**837.63**
600 x 1400mm	2676	9124	44.0111	783.00	**963.09**
600 x 1600mm	3058	10427	44.0112	882.00	**1084.86**



Sub Section

Aluminium Range

A huge variety of contemporary aluminium radiators and towel rails, from flat panel to ladder rail styles to suit any room.

Statement piece accessory towel hangers complement both vertical and horizontal designs allowing room for towels.

Contents

Pelago Towel Rail, Available in 3 colours	610-611
Velor, Matt White & Matt Anthracite	612-613
Charlton Vertical & Horizontal, Available in 3 colours	614-616
Charlton Towel Hangers	617
Withington Vertical & Horizontal, Available in 4 colours	618-620
Withington Towel Hangers	621
Malmesbury Vertical & Horizontal, Available in 4 colours	622-625
Malmesbury Towel Hangers	627
Addington Aluminium Type10, Gloss White & Matt Anthracite	628-631
Addington Aluminium Type20, Gloss White & Matt Anthracite	632-635
Rosano Vertical & Horizontal, Available in 3 colours	636-639
Rosano Towel Hangers	640-641
Peretti Vertical & Horizontal, Available in 4 colours	642-645
Peretti Towel Hangers	646-647
Sandhurst Vertical & Horizontal, Available in 3 colours	648-651
Berkeley Horizontal, Available in 3 colours	652-653
Tordino Vertical & Horizontal, Available in 4 colours	654-657
Guardia Vertical & Horizontal, Available in 4 colours	658-661
Hadleigh Vertical & Horizontal, Available in 3 colours	662-665
Vesima Vertical & Horizontal, Available in 3 colours	666-669
Preston Vertical, Available in 3 colours	670-671
Berlini Vertical, Available in 4 colours	672-673
Fairford Vertical & Horizontal, Matt White & Matt Anthracite	674-677
Burford Vertical & Horizontal, Matt White & Matt Anthracite	678-681
Kelmscott Vertical & Horizontal, Matt White & Matt Anthracite	682-685
Witney Vertical & Horizontal, Matt White & Matt Anthracite	686-687

Aluminium Range

PELAGO

Pictured 86.0224 Polished Aluminium





The Pelago features two towel rail widths of 500mm & 600mm, along with three height variations to suit any sized bathroom, kitchen or cloakroom suite.



Pictured 86.0210 Matt Anthracite

Aluminium Range

PELAGO

With its slim construction and modern design, the Pelago aluminium towel rail is ready to heat up your towels.

FEATURES

- Excellent heat conductivity and lightweight
- Only requires a low water volume
- Heats up very quickly
- Tested to BS EN 442 standards
- 5 Year Manufacturer's Warranty*
- Can be single or dual fuel, or all electric

* With conditions

Technical Tables & Drawings
Page 782-783

1200mm High



1800mm High



600mm High



Pelago - Matt White

Size H x W	Watts	BTU	Element Output	Element Type	Code	€ Ex VAT	€ Inc VAT
600 x 500mm	296	1011	150W	A, A+	86.0208	201.00	**247.23**
600 x 600mm	356	1213	150W	A, A+	86.0209	216.00	**265.68**
1200 x 500mm	566	1931	300W	A, A+	86.0214	331.00	**407.13**
1200 x 600mm	679	2317	300W	A, A+	86.0215	355.00	**436.65**
1800 x 500mm	907	3094	300W	A, A+	86.0220	471.00	**579.33**
1800 x 600mm	1088	3712	600W	A, A+	86.0221	509.00	**626.07**

Pelago - Matt Anthracite

Size H x W	Watts	BTU	Element Output	Element Type	Code	€ Ex VAT	€ Inc VAT
600 x 500mm	296	1011	150W	A, A+	86.0210	201.00	**247.23**
600 x 600mm	356	1213	150W	A, A+	86.0211	216.00	**265.68**
1200 x 500mm	566	1931	300W	A, A+	86.0216	331.00	**407.13**
1200 x 600mm	679	2317	300W	A, A+	86.0217	355.00	**436.65**
1800 x 500mm	907	3094	300W	A, A+	86.0222	471.00	**579.33**
1800 x 600mm	1088	3712	600W	A, A+	86.0223	509.00	**626.07**

Pelago - Polished Aluminium

Size H x W	Watts	BTU	Element Output	Element Type	Code	€ Ex VAT	€ Inc VAT
600 x 500mm	287	981	150W	A, A+	86.0212	223.00	**274.29**
600 x 600mm	345	1177	150W	A, A+	86.0213	240.00	**295.20**
1200 x 500mm	549	1873	300W	A, A+	86.0218	369.00	**453.87**
1200 x 600mm	659	2248	300W	A, A+	86.0219	397.00	**488.31**
1800 x 500mm	880	3001	300W	A, A+	86.0224	528.00	**649.44**
1800 x 600mm	1055	3601	600W	A, A+	86.0225	573.00	**704.79**

Radiator Valves
Page 731-737



Matt White



Matt Anthracite



Polished Aluminium





Pictured 86.0215 Matt White

TECHNICAL INFORMATION

All measurements in Height by Width. Heat output based on ▲T60˚C. Radiators that are electric only are restricted to the heat output of the elements. For element types see pages 718-729. For matching valves see pages 731-737. For indirect heating systems only. Tappings are approx. 25mm less than the width of the rail and approx. 75-105mm off the wall. Price includes radiator and wall fixing sets, valves extra.

Aluminium Range

VELOR, MATT WHITE

High Output



Pictured 86.0163 Matt White

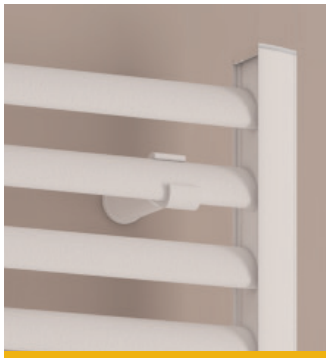

Slanted Horizontal Bars



Exposed Chrome Cover Caps

The Velor features two towel rail widths of 500mm & 600mm, along with three height variations to suit any sized bathroom, kitchen or cloakroom suite.

Radiator Valves
Page 731-737



The Velor is light weight aluminium towel rail that has a high heat output. It's available in two colours; Matt White & Matt Anthracite, both with slanted horizontal bars.

Velor Straight Towel Rail - Matt White

Size H x W	Watts	BTU	Element Output	Element Type	Code	€ Ex VAT	€ Inc VAT
600 x 500mm	266	908	150W	A, D, E	86.0158	268.00	**329.64**
600 x 600mm	319	1090	150W	A, D, E	86.0159	290.00	**356.70**
1200 x 500mm	699	2384	300W	A, D, E	86.0160	531.00	**653.13**
1200 x 600mm	838	2861	300W	A, D, E	86.0161	588.00	**723.24**
1800 x 500mm	1031	3519	600W	A, D, E	86.0162	759.00	**933.57**
1800 x 600mm	1238	4223	600W	A, D, E	86.0163	852.00	**1047.96**

Warranty 5 Year | Heating | All Electric | Dual-Fuel

FEATURES
- Excellent heat conductivity and lightweight
- Only requires a low water volume
- Heats up very quickly
- Tested to BS EN 442 standards
- 5 Year Manufacturer's Warranty*
- Can be single or dual fuel, or all electric

* With conditions

Technical Tables & Drawings
Page 782-783

TECHNICAL INFORMATION

All measurements in Height by Width. Heat output based on ▲T60˚C. Radiators that are electric only are restricted to the heat output of the elements. Element size can be increased to full capacity of rail if using element type D or E. For element types see pages 718-729. For matching valves see pages 731-737. For indirect heating systems only. Tappings are approx. 25mm less than the width of the rail and approx. 80-110mm off the wall. Price includes radiator and wall fixing sets, valves extra.

Aluminium Range

VELOR, MATT ANTHRACITE



Pictured 86.0167 Matt Anthracite



Slanted Horizontal Bars



Exposed Chrome Cover Caps

The Velor features two towel rail widths of 500mm & 600mm, along with three height variations to suit any sized bathroom, kitchen or cloakroom suite.

Radiator Valves
Page 731-737

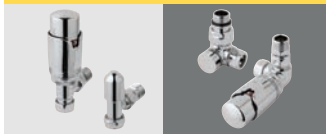

The Velor is light weight aluminium towel rail that has a high heat output. It's available in two colours; Matt White & Matt Anthracite, both with slanted horizontal bars.

Velor Straight Towel Rail - Matt Anthracite

Size H x W	Watts	BTU	Element Output	Element Type	Code	€ Ex VAT	€ Inc VAT
600 x 500mm	266	908	150W	A, D, E	86.0164	268.00	**329.64**
600 x 600mm	319	1090	150W	A, D, E	86.0165	290.00	**356.70**
1200 x 500mm	699	2384	300W	A, D, E	86.0166	531.00	**653.13**
1200 x 600mm	838	2861	300W	A, D, E	86.0167	588.00	**723.24**
1800 x 500mm	1031	3519	600W	A, D, E	86.0168	759.00	**933.57**
1800 x 600mm	1238	4223	600W	A, D, E	86.0169	852.00	**1047.96**

Warranty 5 Year | Heating | All Electric | Dual-Fuel

FEATURES

- Excellent heat conductivity and lightweight
- Only requires a low water volume
- Heats up very quickly
- Tested to BS EN 442 standards
- 5 Year Manufacturer's Warranty*
- Can be single or dual fuel, or all electric

* With conditions

Technical Tables & Drawings
Page 782-783

TECHNICAL INFORMATION

All measurements in Height by Width. Heat output based on ▲T60˚C. Radiators that are electric only are restricted to the heat output of the elements. Element size can be increased to full capacity of rail if using element type D or E. For element types see pages 718-729. For matching valves see pages 731-737. For indirect heating systems only. Tappings are approx. 25mm less than the width of the rail and approx. 80-110mm off the wall. Price includes radiator and wall fixing sets, valves extra.

Aluminium Range

CHARLTON VERTICAL



Pictured 89.0128 Matt White with 89.0134 Towel Hangers x3



Pictured 89.0764 Matt Black

A contemporary versatile radiator style, that come in a variety of sizes and three finishes, with an optional extra of stylish towel hangers.

All Electric | Dual-Fuel | Warranty 5 Year | Heating

FEATURES

- Excellent heat conductivity and lightweight
- Only requires a low water volume
- Heats up very quickly
- Radiators come with cover caps on top and bottom, same as radiator colour.
- Can be single, dual fuel or all electric
- Tested to BS EN 442 standards
- 5 Year Manufacturer's Warranty*

* With conditions

Technical Tables & Drawings
Page 782-783

Aluminium Range

CHARLTON VERTICAL

Matt White	Matt Anthracite	Matt Black

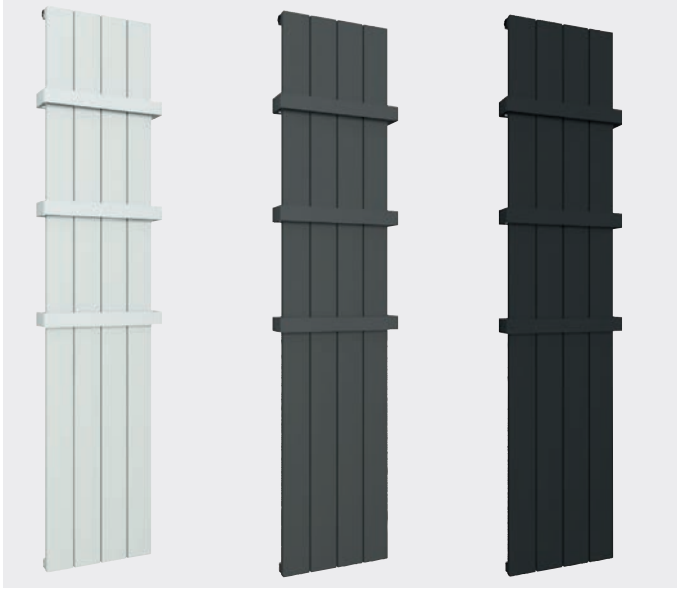



Pictured 89.0960 Matt Anthracite with 89.0182 Towel Hangers x2

Charlton Vertical Aluminium Radiators - Matt White

Size H x W	Watts	BTU	Element Output	Element Type	Code	€ Ex VAT	€ Inc VAT
600 x 280mm	305	1041	150W	A, A+, F, G	89.0758	243.00	**298.89**
1200 x 280mm	585	1997	300W	A, A+, F, G	89.0925	335.00	**412.05**
1200 x 375mm	775	2645	300W	A, A+, F, G	89.0926	430.00	**528.90**
1200 x 470mm	963	3286	450W	A, A+, F, G	89.0927	527.00	**648.21**
1200 x 565mm	1150	3924	600W	A, A+, F, G	89.0928	629.00	**773.67**
1800 x 280mm	844	2880	450W	A, A+, F, G	89.0128	409.00	**503.07**
1800 x 375mm	1119	3819	600W	A, A+, F, G	89.0130	530.00	**651.90**
1800 x 470mm	1391	4747	750W	A, A+, F, G	89.0132	639.00	**785.97**
1800 x 565mm	1661	5668	1000W	A, A+, F, G	89.0759	793.00	**975.39**

Charlton Vertical Aluminium Radiators - Matt Anthracite

Size H x W	Watts	BTU	Element Output	Element Type	Code	€ Ex VAT	€ Inc VAT
600 x 280mm	305	1041	150W	A, A+, F, G	89.0760	243.00	**298.89**
1200 x 280mm	585	1997	300W	A, A+, F, G	89.0958	335.00	**412.05**
1200 x 375mm	775	2645	300W	A, A+, F, G	89.0959	430.00	**528.90**
1200 x 470mm	963	3286	450W	A, A+, F, G	89.0960	527.00	**648.21**
1200 x 565mm	1150	3924	600W	A, A+, F, G	89.0961	629.00	**773.67**
1800 x 280mm	844	2880	450W	A, A+, F, G	89.0129	409.00	**503.07**
1800 x 375mm	1119	3819	600W	A, A+, F, G	89.0131	530.00	**651.90**
1800 x 470mm	1391	4747	750W	A, A+, F, G	89.0133	639.00	**785.97**
1800 x 565mm	1661	5668	1000W	A, A+, F, G	89.0761	793.00	**975.39**

Charlton Vertical Aluminium Radiators - Matt Black

Size H x W	Watts	BTU	Element Output	Element Type	Code	€ Ex VAT	€ Inc VAT
600 x 280mm	305	1041	150W	A, A+, F, G	89.0762	243.00	**298.89**
1200 x 280mm	585	1997	300W	A, A+, F, G	89.0979	335.00	**412.05**
1200 x 375mm	775	2645	300W	A, A+, F, G	89.0980	430.00	**528.90**
1200 x 470mm	963	3286	450W	A, A+, F, G	89.0981	527.00	**648.21**
1200 x 565mm	1150	3924	600W	A, A+, F, G	89.0982	629.00	**773.67**
1800 x 280mm	844	2880	450W	A, A+, F, G	89.0763	409.00	**503.07**
1800 x 375mm	1119	3819	600W	A, A+, F, G	89.0764	530.00	**651.90**
1800 x 470mm	1391	4747	750W	A, A+, F, G	89.0765	639.00	**785.97**
1800 x 565mm	1661	5668	1000W	A, A+, F, G	89.0766	793.00	**975.39**

Prices include radiator and wall fixing sets, valves and accessories extra.

TECHNICAL INFORMATION

All measurements in Height by Width. Heat output based on ▲T60˚C. For matching valves see pages 731-737. Corrosion inhibitor must be added to the heating system and maintained. Flow diverter must only be fitted when radiator installed on central heating system. For indirect heating systems only. Tappings are the width of the rail and 33 or 53mm off the wall.



Charlton Cover Cap Sets - Chrome

Description	Code	€ Ex VAT	€ Inc VAT
Cover Cap Set 280mm	89.0165	24.00	**29.52**
Cover Cap Set 375mm	89.0166	28.00	**34.44**
Cover Cap Set 470mm	89.0167	30.00	**36.90**
Cover Cap Set 565mm	89.0837	37.00	**45.51**

Cover cap sets only include cover caps for the top of the radiator.

For element types see pages 718-729.

Element can only be installed vertically on the right-hand side on the bottom header. Radiators that are electric only are restricted to the heat output of the elements. Element size can be increased to full capacity of rail if using element type F or G. For dual fuel installations, element must be installed on flow side.



Round Vent Caps
Page 741



Aluminium Range

CHARLTON HORIZONTAL



Pictured 89.0751 Matt Anthracite

A contemporary versatile radiator style, that come in three finishes, with an optional extra of stylish towel hangers.

Charlton Horizontal Aluminium Radiators - Matt White

Size H x W	Watts	BTU	Element Output	Element Type	Code	€ Ex VAT	€ Inc VAT
600 x 470mm	503	1717	300W	A, A+, C, H	89.0743	336.00	**413.28**
600 x 660mm	697	2379	450W	A, A+, C, H	89.0744	443.00	**544.89**
600 x 850mm	890	3037	600W	A, A+, C, H	89.0745	553.00	**680.19**
600 x 1040mm	1081	3689	750W	A, A+, C, H	89.0746	657.00	**808.11**
600 x 1230mm	1271	4337	900W	A, A+, C, H	89.0747	773.00	**950.79**
600 x 1420mm	1460	4982	900W	A, A+, C, H	89.0929	905.00	**1113.15**

Charlton Horizontal Aluminium Radiators - Matt Anthracite

Size H x W	Watts	BTU	Element Output	Element Type	Code	€ Ex VAT	€ Inc VAT
600 x 470mm	503	1717	300W	A, A+, C, H	89.0748	336.00	**413.28**
600 x 660mm	697	2379	450W	A, A+, C, H	89.0749	443.00	**544.89**
600 x 850mm	890	3037	600W	A, A+, C, H	89.0750	553.00	**680.19**
600 x 1040mm	1081	3689	750W	A, A+, C, H	89.0751	657.00	**808.11**
600 x 1230mm	1271	4337	900W	A, A+, C, H	89.0752	773.00	**950.79**
600 x 1420mm	1460	4982	900W	A, A+, C, H	89.0962	905.00	**1113.15**

Charlton Horizontal Aluminium Radiators - Matt Black

Size H x W	Watts	BTU	Element Output	Element Type	Code	€ Ex VAT	€ Inc VAT
600 x 470mm	503	1717	300W	A, A+, C, H	89.0753	336.00	**413.28**
600 x 660mm	697	2379	450W	A, A+, C, H	89.0754	443.00	**544.89**
600 x 850mm	890	3037	600W	A, A+, C, H	89.0755	553.00	**680.19**
600 x 1040mm	1081	3689	750W	A, A+, C, H	89.0756	657.00	**808.11**
600 x 1230mm	1271	4337	900W	A, A+, C, H	89.0757	773.00	**950.79**
600 x 1420mm	1460	4982	900W	A, A+, C, H	89.0983	905.00	**1113.15**

Warranty 5 Year | Heating | All Electric | Dual-Fuel

For element types see pages 718-729.

Element can only be installed horizontally on the bottom header. Radiators that are electric only are restricted to the heat output of the elements (Type C up to 900 watts).



FEATURES

- Excellent heat conductivity and lightweight
- Only requires a low water volume
- Heats up very quickly
- Radiators come with cover caps on top and bottom, same as radiator colour.
- Can be single, dual fuel or all electric
- Tested to BS EN 442 standards
- 5 Year Manufacturer's Warranty*

* With conditions

Technical Tables & Drawings
Page 782-783

TECHNICAL INFORMATION

All measurements in Height by Width. Heat output based on ▲T60˚C. For matching valves see pages 731-737. Corrosion inhibitor must be added to the heating system and maintained. Flow diverter must only be fitted when radiator installed on central heating system. For indirect heating systems only. Tappings are the width of the rail and 33 or 53mm off the wall.

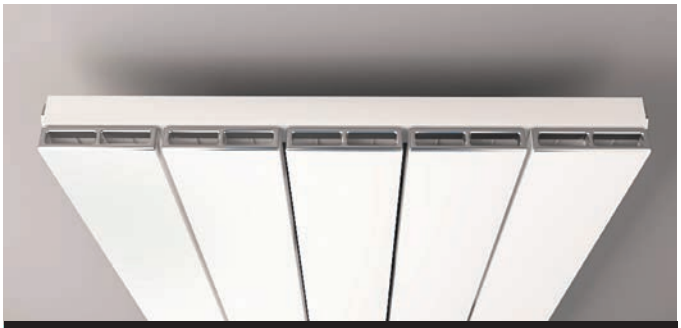

Charlton Cover Cap Sets - Chrome

Description	Code	€ Ex VAT	€ Inc VAT
Cover Cap Set 470mm	89.0167	30.00	**36.90**
Cover Cap Set 660mm	89.0838	44.00	**54.12**
Cover Cap Set 850mm	89.0839	54.00	**66.42**
Cover Cap Set 1040mm	89.0840	62.00	**76.26**
Cover Cap Set 1230mm	89.0841	75.00	**92.25**
Cover Cap Set 1420mm	89.1404	82.00	**100.86**

Cover cap sets only include cover caps for the top of the radiator.

Round Vent Caps
Page 741



Aluminium Range

CHARLTON STANDARD TOWEL HANGERS



Towel Hanger - Matt White

Size	Code	€ Ex VAT	€ Inc VAT
280mm	89.0177	83.00	**102.09**
375mm	89.0178	87.00	**107.01**
470mm	89.0179	98.00	**120.54**
565mm	86.0333	104.00	**127.92**



Towel Hanger - Matt Anthracite

Size	Code	€ Ex VAT	€ Inc VAT
280mm	89.0180	83.00	**102.09**
375mm	89.0181	87.00	**107.01**
470mm	89.0182	98.00	**120.54**
565mm	86.0334	104.00	**127.92**



Towel Hanger - Matt Black

Size	Code	€ Ex VAT	€ Inc VAT
280mm	89.0183	83.00	**102.09**
375mm	89.0184	87.00	**107.01**
470mm	89.0185	98.00	**120.54**
565mm	86.0335	104.00	**127.92**

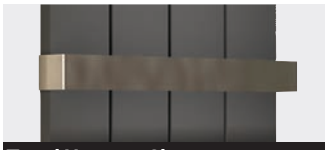

Towel Hanger - Chrome

Size	Code	€ Ex VAT	€ Inc VAT
280mm	89.0134	70.00	**86.10**
375mm	89.0135	75.00	**92.25**
470mm	89.0136	86.00	**105.78**
565mm	86.0336	96.00	**118.08**

TECHNICAL INFORMATION

Material: **Steel (Premium: Stainless Steel - Grade 304)**

Vertical Radiators:

1200mm radiators come with 2 pre-drilled towel hanger locations with a maximum of 2 towel hangers and 1800mm height radiators come with 3 pre-drilled towel hanger locations with a maximum of 3 towel hangers - all widths; 280, 375, 470 and 565mm. 600mm height radiators come with 1 pre-drilled towel hanger location, with a maximum of 1 towel hanger - 280mm width. The standard towel hangers are only compatible with the Vertical Radiators.

Can be fitted after installation only on high adjustment bracket fitting.

Horizontal Radiators:

Don't have holes for Standard Towel Hangers (except 470mm width). Standard Towel Hanger can not be fitted. The Charlton Standard Towel Hangers will add approx 8mm width on each side once fitted to the radiator.

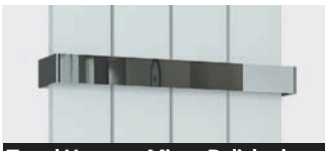

Towel Hanger - Mirror Polished Premium

Size	Code	€ Ex VAT	€ Inc VAT
280mm	86.0198	97.00	**119.31**
375mm	86.0199	107.00	**131.61**
470mm	86.0200	115.00	**141.45**
565mm	86.0337	124.00	**152.52**

CHARLTON FLAT STYLE TOWEL HANGERS

SINGLE FLAT STYLE



Towel Hanger - Matt White

Size	Code	€ Ex VAT	€ Inc VAT
280mm	89.0283	96.00	**118.08**
375mm	89.0284	105.00	**129.15**
470mm	89.0285	118.00	**145.14**
565mm	91.0163	126.00	**154.98**
660mm	89.0286	133.00	**163.59**
850mm	89.0287	149.00	**183.27**

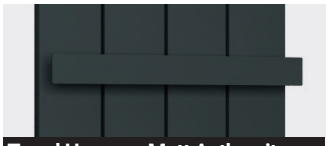

Towel Hanger - Matt Anthracite

Size	Code	€ Ex VAT	€ Inc VAT
280mm	89.0288	96.00	**118.08**
375mm	89.0289	105.00	**129.15**
470mm	89.0290	118.00	**145.14**
565mm	91.0164	126.00	**154.98**
660mm	89.0291	133.00	**163.59**
850mm	89.0292	149.00	**183.27**

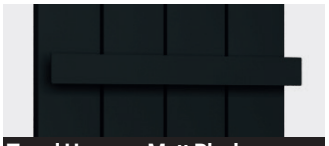

Towel Hanger - Matt Black

Size	Code	€ Ex VAT	€ Inc VAT
280mm	89.0293	96.00	**118.08**
375mm	89.0294	105.00	**129.15**
470mm	89.0295	118.00	**145.14**
565mm	91.0165	126.00	**154.98**
660mm	89.0296	133.00	**163.59**
850mm	89.0297	149.00	**183.27**

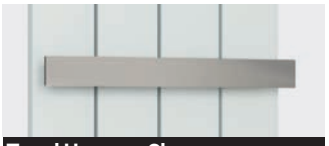

Towel Hanger - Chrome

Size	Code	€ Ex VAT	€ Inc VAT
280mm	91.0094	131.00	**161.13**
375mm	91.0095	133.00	**163.59**
470mm	91.0096	136.00	**167.28**
565mm	91.0166	138.00	**169.74**
660mm	91.0097	143.00	**175.89**
850mm	91.0098	153.00	**188.19**

DOUBLE FLAT STYLE

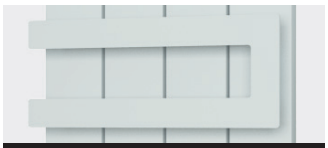

Towel Hanger - Matt White

Size	Code	€ Ex VAT	€ Inc VAT
280mm	89.0369	117.00	**143.91**
375mm	89.0370	122.00	**150.06**
470mm	89.0371	138.00	**169.74**
565mm	91.0167	152.00	**186.96**
660mm	89.0372	161.00	**198.03**
850mm	89.0373	180.00	**221.40**

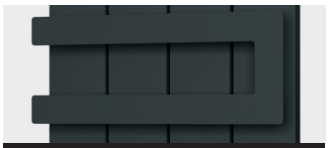

Towel Hanger - Matt Anthracite

Size	Code	€ Ex VAT	€ Inc VAT
280mm	89.0374	117.00	**143.91**
375mm	89.0375	122.00	**150.06**
470mm	89.0376	138.00	**169.74**
565mm	91.0168	152.00	**186.96**
660mm	89.0377	161.00	**198.03**
850mm	89.0378	180.00	**221.40**

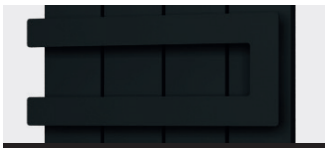

Towel Hanger - Matt Black

Size	Code	€ Ex VAT	€ Inc VAT
280mm	89.0379	117.00	**143.91**
375mm	89.0380	122.00	**150.06**
470mm	89.0381	138.00	**169.74**
565mm	91.0169	152.00	**186.96**
660mm	89.0382	161.00	**198.03**
850mm	89.0383	180.00	**221.40**

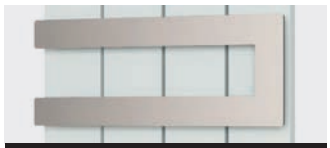

Towel Hanger - Chrome

Size	Code	€ Ex VAT	€ Inc VAT
280mm	91.0114	166.00	**204.18**
375mm	91.0115	173.00	**212.79**
470mm	91.0116	175.00	**215.25**
565mm	91.0170	184.00	**226.32**
660mm	91.0117	189.00	**232.47**
850mm	91.0118	205.00	**252.15**

TECHNICAL INFORMATION

Material: **Steel**

Vertical and Horizontal Radiators:

Flat & Double Flat Style Hangers are compatible with both Vertical and Horizontal radiators.(Depending on the radiators and hangers width)

Must be fitted before installation!

Hanger Fitting Widths
96/191/286/381/476/666mm



Hanger Fitting Widths
96/191/286/381/476/666mm



Aluminium Range

WITHINGTON VERTICAL



Pictured 89.0142 Matt Anthracite with 86.0079 Towel Hangers x3 & 89.0170 Cover Caps x2



Pictured 89.0139 Matt White with 101.0058 Towel Hanger

An elegant aluminium radiator with clean lines which will be the centre of attention in any room. Towel hangers and chrome caps are available as an additional extras.

Warranty 5 Year | Heating | All Electric | Dual-Fuel

FEATURES

- Excellent heat conductivity and lightweight
- Heats up very quickly
- Only requires a low water volume
- Radiators come with cover caps on top and bottom, same as radiator colour. Matt Cobalt Blue radiators come with Chrome Cover Caps
- Can be single, dual fuel or all electric
- Tested to BS EN 442 standards
- 5 Year Manufacturer's Warranty*

* With conditions

Technical Tables & Drawings
Page 784-785

Aluminium Range

Matt White | Matt Anthracite | Matt Black | Matt Cobalt Blue

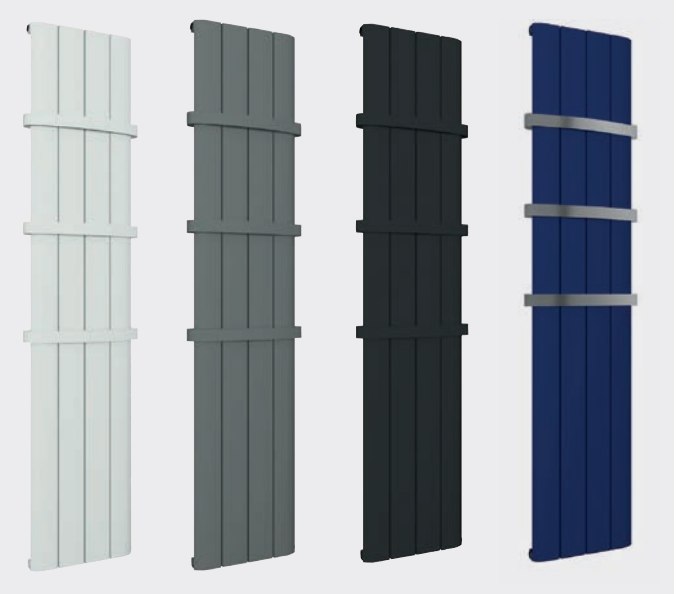

An elegant designer radiator with clean lines which will be the centre of attention in any room. Towel hangers and chrome caps are available as additional extras.

Withington Aluminium Radiators - Matt White

Size H x W	Watts	BTU	Element Output	Element Type	Code	€ Ex VAT	€ Inc VAT
600 x 280mm	305	1041	150W	A, A+, F, G	89.0782	243.00	**298.89**
1200 x 280mm	559	1908	300W	A, A+, F, G	89.0930	335.00	**412.05**
1200 x 375mm	742	2532	300W	A, A+, F, G	89.0931	430.00	**528.90**
1200 x 470mm	922	3146	450W	A, A+, F, G	89.0932	527.00	**648.21**
1200 x 565mm	1101	3757	600W	A, A+, F, G	89.0933	629.00	**773.67**
1800 x 280mm	812	2771	450W	A, A+, F, G	89.0137	409.00	**503.07**
1800 x 375mm	1076	3672	600W	A, A+, F, G	89.0139	530.00	**651.90**
1800 x 470mm	1338	4566	750W	A, A+, F, G	89.0141	639.00	**785.97**
1800 x 565mm	1598	5453	1000W	A, A+, F, G	89.0783	793.00	**975.39**

Withington Aluminium Radiators - Matt Anthracite

Size H x W	Watts	BTU	Element Output	Element Type	Code	€ Ex VAT	€ Inc VAT
600 x 280mm	305	1041	150W	A, A+, F, G	89.0784	243.00	**298.89**
1200 x 280mm	559	1908	300W	A, A+, F, G	89.0963	335.00	**412.05**
1200 x 375mm	742	2532	300W	A, A+, F, G	89.0964	430.00	**528.90**
1200 x 470mm	922	3146	450W	A, A+, F, G	89.0965	527.00	**648.21**
1200 x 565mm	1101	3757	600W	A, A+, F, G	89.0966	629.00	**773.67**
1800 x 280mm	812	2771	450W	A, A+, F, G	89.0138	409.00	**503.07**
1800 x 375mm	1076	3672	600W	A, A+, F, G	89.0140	530.00	**651.90**
1800 x 470mm	1338	4566	750W	A, A+, F, G	89.0142	639.00	**785.97**
1800 x 565mm	1598	5453	1000W	A, A+, F, G	89.0785	793.00	**975.39**

Withington Aluminium Radiators - Matt Black

Size H x W	Watts	BTU	Element Output	Element Type	Code	€ Ex VAT	€ Inc VAT
600 x 280mm	305	1041	150W	A, A+, F, G	89.0786	243.00	**298.89**
1200 x 280mm	559	1908	300W	A, A+, F, G	89.0984	335.00	**412.05**
1200 x 375mm	742	2532	300W	A, A+, F, G	89.0985	430.00	**528.90**
1200 x 470mm	922	3146	450W	A, A+, F, G	89.0986	527.00	**648.21**
1200 x 565mm	1101	3757	600W	A, A+, F, G	89.0987	629.00	**773.67**
1800 x 280mm	812	2771	450W	A, A+, F, G	89.0787	409.00	**503.07**
1800 x 375mm	1076	3672	600W	A, A+, F, G	89.0788	530.00	**651.90**
1800 x 470mm	1338	4566	750W	A, A+, F, G	89.0789	639.00	**785.97**
1800 x 565mm	1598	5453	1000W	A, A+, F, G	89.0790	793.00	**975.39**

Withington Aluminium Radiators - Matt Cobalt Blue

Size H x W	Watts	BTU	Element Output	Element Type	Code	€ Ex VAT	€ Inc VAT
1800 x 280mm	812	2771	450W	A, A+, F, G	89.1608	409.00	**503.07**
1800 x 375mm	1076	3672	600W	A, A+, F, G	89.1609	530.00	**651.90**
1800 x 470mm	1338	4566	750W	A, A+, F, G	89.1610	639.00	**785.97**

Prices include radiator and wall fixing sets, valves and accessories extra.

WITHINGTON VERTICAL



Pictured 89.0987 Matt Black

TECHNICAL INFORMATION

All measurements in Height by Width. Heat output based on ▲T60˚C. For matching valves see pages 731-737. Corrosion inhibitor must be added to the heating system and maintained. Flow diverter must only be fitted when radiator installed on central heating system. For indirect heating systems only. Tappings are the width of the rail and 33 or 53mm off the wall.



Withington Cover Cap Sets - Chrome

Description	Code	€ Ex VAT	€ Inc VAT
Cover Cap Set 280mm	89.0168	24.00	**29.52**
Cover Cap Set 375mm	89.0169	28.00	**34.44**
Cover Cap Set 470mm	89.0170	30.00	**36.90**
Cover Cap Set 565mm	89.0842	37.00	**45.51**

Cover Caps Chrome: The cover cap set only includes cover caps for the top or the bottom of the radiator.

Round Vent Caps
Page 741



For element types see pages 718-729.

Element can only be installed vertically on the right-hand side on the bottom header. Radiators that are electric only are restricted to the heat output of the elements. Element size can be increased to full capacity of rail if using element type F or G. For dual fuel installations, element must be installed on flow side.



Aluminium Range

WITHINGTON HORIZONTAL

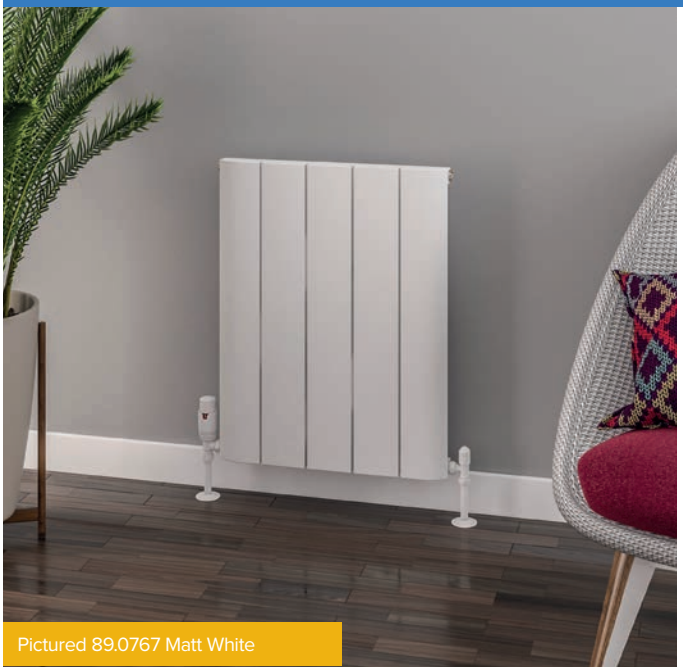

Pictured 89.0767 Matt White

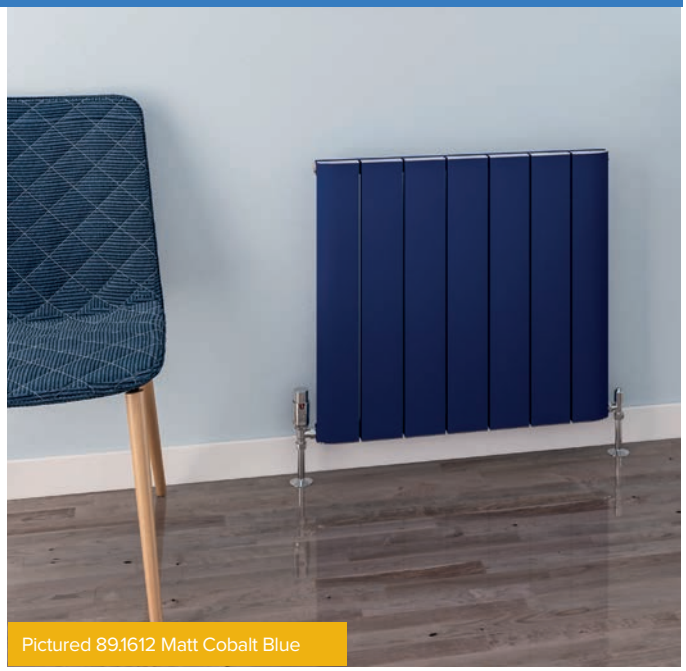

Pictured 89.1612 Matt Cobalt Blue

A contemporary versatile radiator style, that come in four finishes, with an optional extra of stylish towel hangers.

Withington Horizontal Aluminium Radiators - Matt White

Size H x W	Watts	BTU	Element Output	Element Type	Code	€ Ex VAT	€ Inc VAT
600 x 470mm	502	1713	300W	A, A+, C, H	89.0767	336.00	**413.28**
600 x 660mm	697	2379	450W	A, A+, C, H	89.0768	443.00	**544.89**
600 x 850mm	889	3034	600W	A, A+, C, H	89.0769	553.00	**680.19**
600 x 1040mm	1080	3685	750W	A, A+, C, H	89.0770	657.00	**808.11**
600 x 1230mm	1270	4334	900W	A, A+, C, H	89.0771	773.00	**950.79**
600 x 1420mm	1459	4979	900W	A, A+, C, H	89.0934	905.00	**1113.15**

Withington Horizontal Aluminium Radiators - Matt Anthracite

Size H x W	Watts	BTU	Element Output	Element Type	Code	€ Ex VAT	€ Inc VAT
600 x 470mm	502	1713	300W	A, A+, C, H	89.0772	336.00	**413.28**
600 x 660mm	697	2379	450W	A, A+, C, H	89.0773	443.00	**544.89**
600 x 850mm	889	3034	600W	A, A+, C, H	89.0774	553.00	**680.19**
600 x 1040mm	1080	3685	750W	A, A+, C, H	89.0775	657.00	**808.11**
600 x 1230mm	1270	4334	900W	A, A+, C, H	89.0776	773.00	**950.79**
600 x 1420mm	1459	4979	900W	A, A+, C, H	89.0967	905.00	**1113.15**

Withington Horizontal Aluminium Radiators - Matt Black

Size H x W	Watts	BTU	Element Output	Element Type	Code	€ Ex VAT	€ Inc VAT
600 x 470mm	502	1713	300W	A, A+, C, H	89.0777	336.00	**413.28**
600 x 660mm	697	2379	450W	A, A+, C, H	89.0778	443.00	**544.89**
600 x 850mm	889	3034	600W	A, A+, C, H	89.0779	553.00	**680.19**
600 x 1040mm	1080	3685	750W	A, A+, C, H	89.0780	657.00	**808.11**
600 x 1230mm	1270	4334	900W	A, A+, C, H	89.0781	773.00	**950.79**
600 x 1420mm	1459	4979	900W	A, A+, C, H	89.0988	905.00	**1113.15**

Withington Horizontal Aluminium Radiators - Matt Cobalt Blue

Size H x W	Watts	BTU	Element Output	Element Type	Code	€ Ex VAT	€ Inc VAT
600 x 470mm	502	1713	300W	A, A+, C, H	89.1611	336.00	**413.28**
600 x 660mm	697	2379	450W	A, A+, C, H	89.1612	443.00	**544.89**
600 x 850mm	889	3034	600W	A, A+, C, H	89.1613	553.00	**680.19**
600 x 1040mm	1080	3685	750W	A, A+, C, H	89.1614	657.00	**808.11**
600 x 1230mm	1270	4334	900W	A, A+, C, H	89.1615	773.00	**950.79**

Prices include radiator and wall fixing sets, valves and accessories extra.

For element types see pages 718-729.

Element can only be installed horizontally on the bottom header. Radiators that are electric only are restricted to the heat output of the elements (Type C up to 900 watts).



Warranty 5 Year | Heating | All Electric | Dual-Fuel

FEATURES

- Excellent heat conductivity and lightweight
- Heats up very quickly
- Only requires a low water volume
- Radiators come with cover caps on top and bottom, same as radiator colour. Matt Cobalt Blue radiators come with Chrome Cover Caps
- Can be single, dual fuel or all electric
- Tested to BS EN 442 standards
- 5 Year Manufacturer's Warranty*

* With conditions

Technical Tables & Drawings
Page 784-785

TECHNICAL INFORMATION

All measurements in Height by Width. Heat output based on ▲T60˚C. For matching valves see pages 731-737. Corrosion inhibitor must be added to the heating system and maintained. Flow diverter must only be fitted when radiator installed on central heating system. For indirect heating systems only. Tappings are the width of the rail and 33 or 53mm off the wall.



Withington Cover Cap Sets - Chrome

Description	Code	€ Ex VAT	€ Inc VAT
Cover Cap Set 470mm	89.0170	30.00	**36.90**
Cover Cap Set 660mm	89.0843	44.00	**54.12**
Cover Cap Set 850mm	89.0844	54.00	**66.42**
Cover Cap Set 1040mm	89.0845	62.00	**76.26**
Cover Cap Set 1230mm	89.0846	75.00	**92.25**
Cover Cap Set 1420mm	89.1405	82.00	**100.86**

Cover Caps Chrome: The cover cap set only includes cover caps for the top or the bottom of the radiator.

Round Vent Caps
Page 741



Aluminium Range

WITHINGTON STANDARD TOWEL HANGERS



Towel Hanger - Matt White

Size	Code	€ Ex VAT	€ Inc VAT
280mm	89.0186	83.00	**102.09**
375mm	89.0187	87.00	**107.01**
470mm	89.0188	98.00	**120.54**
565mm	86.0338	104.00	**127.92**



Towel Hanger - Matt Anthracite

Size	Code	€ Ex VAT	€ Inc VAT
280mm	89.0189	83.00	**102.09**
375mm	89.0190	87.00	**107.01**
470mm	89.0191	98.00	**120.54**
565mm	86.0339	104.00	**127.92**



Towel Hanger - Matt Black

Size	Code	€ Ex VAT	€ Inc VAT
280mm	89.0192	83.00	**102.09**
375mm	89.0193	87.00	**107.01**
470mm	89.0194	98.00	**120.54**
565mm	86.0340	104.00	**127.92**

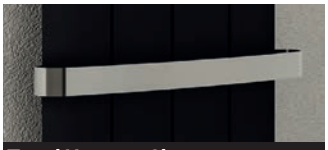

Towel Hanger - Chrome

Size	Code	€ Ex VAT	€ Inc VAT
280mm	86.0077	70.00	**86.10**
375mm	86.0078	83.00	**102.09**
470mm	86.0079	91.00	**111.93**
565mm	86.0341	96.00	**118.08**

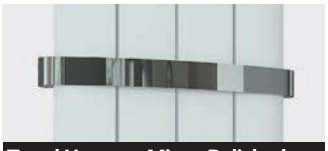

Towel Hanger - Mirror Polished Premium

Size	Code	€ Ex VAT	€ Inc VAT
280mm	86.0201	97.00	**119.31**
375mm	86.0202	107.00	**131.61**
470mm	86.0203	115.00	**141.45**
565mm	86.0342	124.00	**152.52**

TECHNICAL INFORMATION

Material: **Steel (Premium: Stainless Steel - Grade 304)**

Vertical Radiators:

1200mm radiators come with 2 pre-drilled towel hanger locations with a maximum of 2 towel hangers and 1800mm height radiators come with 3 pre-drilled towel hanger locations with a maximum of 3 towel hangers - all widths; 280, 375, 470 and 565mm. 600mm height radiators come with 1 pre-drilled towel hanger location, with a maximum of 1 towel hanger - 280mm width. The standard towel hangers are only compatible with the Vertical Radiators.

Can be fitted after installation only on high adjustment bracket fitting.

Horizontal Radiators:

Don't have holes for Standard Towel Hangers (except 470mm width). Standard Towel Hanger can not be fitted. The Withington Standard Towel Hangers will add approx 8mm width on each side once fitted to the radiator.

WITHINGTON FLAT STYLE TOWEL HANGERS

SINGLE FLAT STYLE



Towel Hanger - Matt White

Size	Code	€ Ex VAT	€ Inc VAT
280mm	89.0283	96.00	**118.08**
375mm	89.0284	105.00	**129.15**
470mm	89.0285	118.00	**145.14**
565mm	91.0163	126.00	**154.98**
660mm	89.0286	133.00	**163.59**
850mm	89.0287	149.00	**183.27**

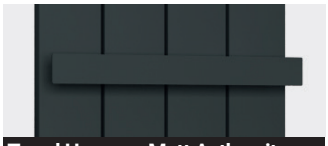

Towel Hanger - Matt Anthracite

Size	Code	€ Ex VAT	€ Inc VAT
280mm	89.0288	96.00	**118.08**
375mm	89.0289	105.00	**129.15**
470mm	89.0290	118.00	**145.14**
565mm	91.0164	126.00	**154.98**
660mm	89.0291	133.00	**163.59**
850mm	89.0292	149.00	**183.27**

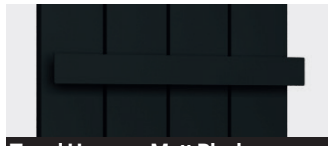

Towel Hanger - Matt Black

Size	Code	€ Ex VAT	€ Inc VAT
280mm	89.0293	96.00	**118.08**
375mm	89.0294	105.00	**129.15**
470mm	89.0295	118.00	**145.14**
565mm	91.0165	126.00	**154.98**
660mm	89.0296	133.00	**163.59**
850mm	89.0297	149.00	**183.27**

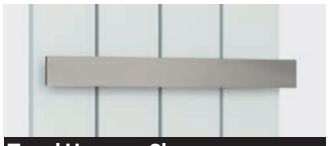

Towel Hanger - Chrome

Size	Code	€ Ex VAT	€ Inc VAT
280mm	91.0094	131.00	**161.13**
375mm	91.0095	133.00	**163.59**
470mm	91.0096	136.00	**167.28**
565mm	91.0166	138.00	**169.74**
660mm	91.0097	143.00	**175.89**
850mm	91.0098	153.00	**188.19**

DOUBLE FLAT STYLE

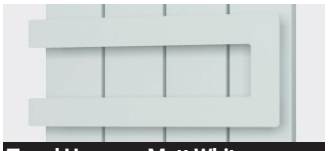

Towel Hanger - Matt White

Size	Code	€ Ex VAT	€ Inc VAT
280mm	89.0369	117.00	**143.91**
375mm	89.0370	122.00	**150.06**
470mm	89.0371	138.00	**169.74**
565mm	91.0167	152.00	**186.96**
660mm	89.0372	161.00	**198.03**
850mm	89.0373	180.00	**221.40**

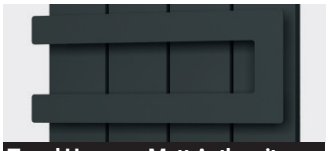

Towel Hanger - Matt Anthracite

Size	Code	€ Ex VAT	€ Inc VAT
280mm	89.0374	117.00	**143.91**
375mm	89.0375	122.00	**150.06**
470mm	89.0376	138.00	**169.74**
565mm	91.0168	152.00	**186.96**
660mm	89.0377	161.00	**198.03**
850mm	89.0378	180.00	**221.40**

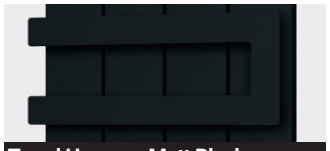

Towel Hanger - Matt Black

Size	Code	€ Ex VAT	€ Inc VAT
280mm	89.0379	117.00	**143.91**
375mm	89.0380	122.00	**150.06**
470mm	89.0381	138.00	**169.74**
565mm	91.0169	152.00	**186.96**
660mm	89.0382	161.00	**198.03**
850mm	89.0383	180.00	**221.40**



Towel Hanger - Chrome

Size	Code	€ Ex VAT	€ Inc VAT
280mm	91.0114	166.00	**204.18**
375mm	91.0115	173.00	**212.79**
470mm	91.0116	175.00	**215.25**
565mm	91.0170	184.00	**226.32**
660mm	91.0117	189.00	**232.47**
850mm	91.0118	205.00	**252.15**

TECHNICAL INFORMATION

Material: **Steel**

Vertical and Horizontal Radiators:

Flat & Double Flat Style Hangers are compatible with both Vertical and Horizontal radiators.(Depending on the radiators and hangers width)

Must be fitted before installation!

Hanger Fitting Widths
96/191/286/381/476/666mm



Hanger Fitting Widths
96/191/286/381/476/666mm



Aluminium Range

MALMESBURY VERTICAL

Technical Tables & Drawings
Page 784-785



Pictured 89.0148 Matt White with 89.0883L Multi-Purpose Towel Hanger (See page 726)

An aluminium radiator range available in both Vertical and Horizontal designs in Matt White, Matt Anthracite, Matt Cappuccino or Matt Grey finishes.
Optional extras include chrome cover caps and towel hangers.

FEATURES

- Excellent heat conductivity and lightweight
- Only requires a low water volume
- Heats up very quickly
- Radiators come with cover caps on top and bottom, same as radiator colour
- Can be single, dual fuel or all electric
- Tested to BS EN 442 standards
- 5 Year Manufacturer's Warranty*

* With conditions



Pictured 89.0279 Matt Grey with 89.0301 Towel Hangers

Aluminium Range

Malmesbury Vertical Aluminium Radiators - Matt White

Size H x W	Watts	BTU	Element Output	Element Type	Code	€ Ex VAT	€ Inc VAT
1200 x 185mm	375	1280	150W	A, A+, F, G	89.0935	250.00	**307.50**
1200 x 280mm	554	1891	300W	A, A+, F, G	89.0936	355.00	**436.65**
1200 x 375mm	730	2491	300W	A, A+, F, G	89.0937	457.00	**562.11**
1200 x 470mm	903	3082	450W	A, A+, F, G	89.0938	558.00	**686.34**
1200 x 565mm	1074	3665	600W	A, A+, F, G	89.0939	667.00	**820.41**
1800 x 185mm	544	1857	300W	A, A+, F, G	89.0277	308.00	**378.84**
1800 x 280mm	804	2744	450W	A, A+, F, G	89.0146	436.00	**536.28**
1800 x 375mm	1060	3617	600W	A, A+, F, G	89.0148	555.00	**682.65**
1800 x 470mm	1311	4474	750W	A, A+, F, G	89.0150	678.00	**833.94**
1800 x 565mm	1560	5323	1000W	A, A+, F, G	89.0739	817.00	**1004.91**

Malmesbury Vertical Aluminium Radiators - Matt Grey

Size H x W	Watts	BTU	Element Output	Element Type	Code	€ Ex VAT	€ Inc VAT
1200 x 185mm	375	1280	150W	A, A+, F, G	89.0946	250.00	**307.50**
1200 x 280mm	554	1891	300W	A, A+, F, G	89.0947	355.00	**436.65**
1200 x 375mm	730	2491	300W	A, A+, F, G	89.0948	457.00	**562.11**
1200 x 470mm	903	3082	450W	A, A+, F, G	89.0949	558.00	**686.34**
1200 x 565mm	1074	3665	600W	A, A+, F, G	89.0950	667.00	**820.41**
1800 x 185mm	544	1857	300W	A, A+, F, G	89.0279	308.00	**378.84**
1800 x 280mm	804	2744	450W	A, A+, F, G	89.0280	436.00	**536.28**
1800 x 375mm	1060	3617	600W	A, A+, F, G	89.0281	555.00	**682.65**
1800 x 470mm	1311	4474	750W	A, A+, F, G	89.0282	678.00	**833.94**
1800 x 565mm	1560	5323	1000W	A, A+, F, G	89.0740	817.00	**1004.91**

Malmesbury Vertical Aluminium Radiators - Matt Anthracite

Size H x W	Watts	BTU	Element Output	Element Type	Code	€ Ex VAT	€ Inc VAT
1200 x 185mm	375	1280	150W	A, A+, F, G	89.0968	250.00	**307.50**
1200 x 280mm	554	1891	300W	A, A+, F, G	89.0969	355.00	**436.65**
1200 x 375mm	730	2491	300W	A, A+, F, G	89.0970	457.00	**562.11**
1200 x 470mm	903	3082	450W	A, A+, F, G	89.0971	558.00	**686.34**
1200 x 565mm	1074	3665	600W	A, A+, F, G	89.0972	667.00	**820.41**
1800 x 185mm	544	1857	300W	A, A+, F, G	89.0278	308.00	**378.84**
1800 x 280mm	804	2744	450W	A, A+, F, G	89.0147	436.00	**536.28**
1800 x 375mm	1060	3617	600W	A, A+, F, G	89.0149	555.00	**682.65**
1800 x 470mm	1311	4474	750W	A, A+, F, G	89.0151	678.00	**833.94**
1800 x 565mm	1560	5323	1000W	A, A+, F, G	89.0742	817.00	**1004.91**

Malmesbury Vertical Aluminium Radiators - Matt Cappuccino

Size H x W	Watts	BTU	Element Output	Element Type	Code	€ Ex VAT	€ Inc VAT
1200 x 185mm	375	1280	150W	A, A+, F, G	89.0952	250.00	**307.50**
1200 x 280mm	554	1891	300W	A, A+, F, G	89.0953	355.00	**436.65**
1200 x 375mm	730	2491	300W	A, A+, F, G	89.0954	457.00	**562.11**
1200 x 470mm	903	3082	450W	A, A+, F, G	89.0955	558.00	**686.34**
1200 x 565mm	1074	3665	600W	A, A+, F, G	89.0956	667.00	**820.41**
1800 x 185mm	544	1857	300W	A, A+, F, G	89.0477	342.00	**420.66**
1800 x 280mm	804	2744	450W	A, A+, F, G	89.0478	483.00	**594.09**
1800 x 375mm	1060	3617	600W	A, A+, F, G	89.0479	622.00	**765.06**
1800 x 470mm	1311	4474	750W	A, A+, F, G	89.0480	761.00	**936.03**
1800 x 565mm	1560	5323	1000W	A, A+, F, G	89.0741	899.00	**1105.77**

Prices include radiator and wall fixing sets, valves and accessories extra.

TECHNICAL INFORMATION

All measurements in Height by Width. Heat output based on ▲T60˚C. For matching valves see pages 731-737. Corrosion inhibitor must be added to the heating system and maintained. Flow diverter must only be fitted when radiator installed on central heating system. For indirect heating systems only. Tappings are the width of the rail and 33 or 53mm off the wall.

Round Vent Caps
Page 741



MALMESBURY VERTICAL

For all Malmesbury Matt White, Matt Anthracite, Matt Cappuccino,Matt Grey & Chrome Towel Hangers, please refer to **page 627.**



SWATCHES AVAILABLE



Pictured 89.0742 Matt Anthracite with 89.0212 Towel Hangers x3

For element types see pages 718-729.

Element can only be installed vertically on the right-hand side on the bottom header. Radiators that are electric only are restricted to the heat output of the elements. Element size can be increased to full capacity of rail if using element type F or G. For dual fuel installations, element must be installed on flow side.





Malmesbury Cover Caps - Chrome

Description	Code	€ Ex VAT	€ Inc VAT
Cover Cap Set 185mm	89.0422	26.00	**31.98**
Cover Cap Set 280mm	89.0171	26.00	**31.98**
Cover Cap Set 375mm	89.0172	28.00	**34.44**
Cover Cap Set 470mm	89.0173	31.00	**38.13**
Cover Cap Set 565mm	89.0174	37.00	**45.51**

Cover Caps Chrome The cover cap set only includes cover caps for the top or the bottom of the radiator.

Aluminium Range

MALMESBURY HORIZONTAL



Pictured 89.0425 Matt White

An aluminium radiator range available in both vertical and horizontal designs in matt white, matt anthracite, matt cappuccino or matt grey finishes. Optional extras include chrome cover caps and towel hangers.

500mm Height

Malmesbury Horizontal Aluminium Radiators - Matt White

Size H x W	Watts	BTU	Element Output	Element Type	Code	€ Ex VAT	€ Inc VAT
500 x 375mm	340	1161	150W	A, A+, C, H	89.0432	259.00	**318.57**
500 x 470mm	421	1437	150W	A, A+, C, H	89.0433	322.00	**396.06**
500 x 565mm	500	1706	300W	A, A+, C, H	89.0434	380.00	**467.40**

Malmesbury Horizontal Aluminium Radiators - Matt Grey

Size H x W	Watts	BTU	Element Output	Element Type	Code	€ Ex VAT	€ Inc VAT
500 x 375mm	340	1161	150W	A, A+, C, H	89.0435	259.00	**318.57**
500 x 470mm	421	1437	150W	A, A+, C, H	89.0436	322.00	**396.06**
500 x 565mm	500	1706	300W	A, A+, C, H	89.0437	380.00	**467.40**

Malmesbury Horizontal Aluminium Radiators - Matt Anthracite

Size H x W	Watts	BTU	Element Output	Element Type	Code	€ Ex VAT	€ Inc VAT
500 x 375mm	340	1161	150W	A, A+, C, H	89.0438	259.00	**318.57**
500 x 470mm	421	1437	150W	A, A+, C, H	89.0439	322.00	**396.06**
500 x 565mm	500	1706	300W	A, A+, C, H	89.0440	380.00	**467.40**

FEATURES

- Excellent heat conductivity and lightweight
- Only requires a low water volume
- Heats up very quickly
- Radiators come with cover caps on top and bottom, same as radiator colour.
- Can be single, dual fuel or all electric
- Tested to BS EN 442 standards
- 5 Year Manufacturer's Warranty*

* With conditions

Technical Tables & Drawings
Page 784-785

Round Vent Caps
Page 741



Warranty 5 Year | Heating | All Electric | Dual-Fuel

Aluminium Range

600mm Height

Malmesbury Horizontal Aluminium Radiators - Matt White

Size H x W	Watts	BTU	Element Output	Element Type	Code	€ Ex VAT	€ Inc VAT
600 x 375mm	397	1355	150W	A, A+, C, H	89.0152	280.00	**344.40**
600 x 470mm	491	1676	300W	A, A+, C, H	89.0154	348.00	**428.04**
600 x 565mm	585	1997	300W	A, A+, C, H	89.0156	409.00	**503.07**
600 x 850mm	859	2931	450W	A, A+, C, H	89.0423	581.00	**714.63**
600 x 1040mm	1039	3546	600W	A, A+, C, H	89.0424	706.00	**868.38**
600 x 1230mm	1217	4153	750W	A, A+, C, H	89.0425	836.00	**1028.28**
600 x 1420mm	1394	4757	900W	A, A+, C, H	89.0940	1039.00	**1277.97**

Malmesbury Horizontal Aluminium Radiators - Matt Grey

Size H x W	Watts	BTU	Element Output	Element Type	Code	€ Ex VAT	€ Inc VAT
600 x 375mm	397	1355	150W	A, A+, C, H	89.0274	280.00	**344.40**
600 x 470mm	491	1676	300W	A, A+, C, H	89.0275	348.00	**428.04**
600 x 565mm	585	1997	300W	A, A+, C, H	89.0276	409.00	**503.07**
600 x 850mm	859	2931	450W	A, A+, C, H	89.0426	581.00	**714.63**
600 x 1040mm	1039	3546	600W	A, A+, C, H	89.0427	706.00	**868.38**
600 x 1230mm	1217	4153	750W	A, A+, C, H	89.0428	836.00	**1028.28**
600 x 1420mm	1394	4757	900W	A, A+, C, H	89.0951	1039.00	**1277.97**

Malmesbury Horizontal Aluminium Radiators - Matt Anthracite

Size H x W	Watts	BTU	Element Output	Element Type	Code	€ Ex VAT	€ Inc VAT
600 x 375mm	397	1355	150W	A, A+, C, H	89.0153	280.00	**344.40**
600 x 470mm	491	1676	300W	A, A+, C, H	89.0155	348.00	**428.04**
600 x 565mm	585	1997	300W	A, A+, C, H	89.0157	409.00	**503.07**
600 x 850mm	859	2931	450W	A, A+, C, H	89.0429	581.00	**714.63**
600 x 1040mm	1039	3546	600W	A, A+, C, H	89.0430	706.00	**868.38**
600 x 1230mm	1217	4153	750W	A, A+, C, H	89.0431	836.00	**1028.28**
600 x 1420mm	1394	4757	900W	A, A+, C, H	89.0973	1039.00	**1277.97**

Malmesbury Horizontal Aluminium Radiators - Matt Cappuccino

Size H x W	Watts	BTU	Element Output	Element Type	Code	€ Ex VAT	€ Inc VAT
600 x 375mm	397	1355	150W	A, A+, C, H	89.0481	315.00	**387.45**
600 x 470mm	491	1676	300W	A, A+, C, H	89.0482	392.00	**482.16**
600 x 565mm	585	1997	300W	A, A+, C, H	89.0483	458.00	**563.34**
600 x 850mm	859	2931	450W	A, A+, C, H	89.0484	684.00	**841.32**
600 x 1040mm	1039	3546	600W	A, A+, C, H	89.0485	831.00	**1022.13**
600 x 1230mm	1217	4153	750W	A, A+, C, H	89.0486	983.00	**1209.09**
600 x 1420mm	1394	4757	900W	A, A+, C, H	89.0957	1039.00	**1277.97**



Malmesbury Cover Caps - Chrome

Description	Code	€ Ex VAT	€ Inc VAT
Cover Cap Set 375mm	89.0172	28.00	**34.44**
Cover Cap Set 470mm	89.0173	31.00	**38.13**
Cover Cap Set 565mm	89.0174	37.00	**45.51**
Cover Cap Set 850mm	89.0497	49.00	**60.27**
Cover Cap Set 1040mm	89.0498	58.00	**71.34**
Cover Cap Set 1230mm	89.0499	66.00	**81.18**
Cover Cap Set 1420mm	89.1406	73.00	**89.79**

Cover Caps Chrome The cover cap set only includes cover caps for the top or the bottom of the radiator.

For element types see pages 718-729.

Element can only be installed horizontally on the bottom header. Radiators that are electric only are restricted to the heat output of the elements (Type C can be incresed up to full capacity of 900 watts).



MALMESBURY HORIZONTAL



Pictured 89.0439 Matt Anthracite with 89.0160 Towel Hanger



Pictured 89.0437 Matt Grey

TECHNICAL INFORMATION

All measurements in Height by Width. Heat output based on ▲T60˚C. For matching valves see pages 731-737. Corrosion inhibitor must be added to the heating system and maintained. Flow diverter must only be fitted when radiator installed on central heating system. For indirect heating systems only. Tappings are the width of the rail and 33 or 53mm off the wall.

Aluminium Range

MATT WHITE

COMPLETE THE LOOK

Pictured below:
Oslo 44 Internal Drawer Unit





MATT GREY

COMPLETE THE LOOK

Pictured below:
Helston Tap Basin Mono





MATT ANTHRACITE

COMPLETE THE LOOK

Pictured below:
Oslo 44 Drawer Unit





MATT CAPPUCCINO

COMPLETE THE LOOK

Pictured below:
Helston Tap Basin Mono



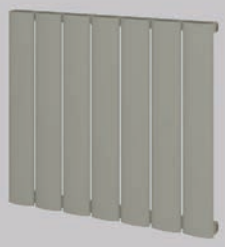

Aluminium Range

MALMESBURY STANDARD TOWEL HANGERS

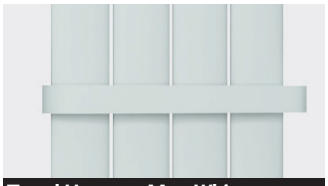

Towel Hanger - Matt White

Size	Code	€ Ex VAT	€ Inc VAT
185mm	89.0298	62.00	**76.26**
280mm	89.0215	75.00	**92.25**
375mm	89.0207	84.00	**103.32**
470mm	89.0208	96.00	**118.08**
565mm	89.0209	101.00	**124.23**

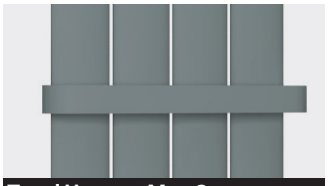

Towel Hanger - Matt Grey

Size	Code	€ Ex VAT	€ Inc VAT
185mm	89.0300	62.00	**76.26**
280mm	89.0302	75.00	**92.25**
375mm	89.0303	84.00	**103.32**
470mm	89.0304	96.00	**118.08**
565mm	89.0305	101.00	**124.23**



Towel Hanger - Matt Anthracite

Size	Code	€ Ex VAT	€ Inc VAT
185mm	89.0299	62.00	**76.26**
280mm	89.0216	75.00	**92.25**
375mm	89.0210	84.00	**103.32**
470mm	89.0211	96.00	**118.08**
565mm	89.0212	101.00	**124.23**

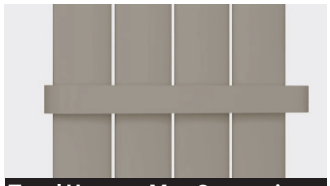

Towel Hanger - Matt Cappuccino

Size	Code	€ Ex VAT	€ Inc VAT
185mm	89.0487	62.00	**76.26**
280mm	89.0488	75.00	**92.25**
375mm	89.0489	84.00	**103.32**
470mm	89.0490	96.00	**118.08**
565mm	89.0491	101.00	**124.23**



Towel Hanger - Chrome

Size	Code	€ Ex VAT	€ Inc VAT
185mm	89.0301	62.00	**76.26**
280mm	89.0158	70.00	**86.10**
375mm	89.0159	75.00	**92.25**
470mm	89.0160	86.00	**105.78**
565mm	89.0176	93.00	**114.39**

TECHNICAL INFORMATION

Material: **Steel**

Vertical Radiators:

1200mm radiators come with 2 pre-drilled towel hanger locations with a maximum of 2 towel hangers and 1800mm height radiators come with 3 pre-drilled towel hanger locations with a maximum of 3 towel hangers - all widths; 185, 280, 375, 470 and 565mm. The standard towel hangers are only compatible with the Vertical Radiators.

Can be fitted after installation only on high adjustment bracket fitting.

Horizontal Radiators:

500mm & 600mm height radiators come with 1 pre-drilled towel hanger location, with a maximum of 1 towel hanger - (only 375, 470 and 565mm widths).

Standard towel hanger can be fitted.

Can be fitted after installation only on high adjustment bracket fitting.

The Malmesbury Standard Towel Hangers will add approx 22mm width on each side once fitted to the radiator.

MALMESBURY FLAT STYLE TOWEL HANGERS

SINGLE FLAT STYLE

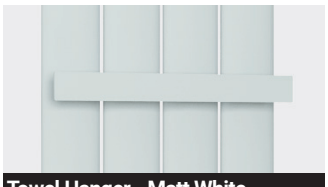

Towel Hanger - Matt White

Size	Code	€ Ex VAT	€ Inc VAT
280mm	89.0306	111.00	**136.53**
375mm	89.0307	118.00	**145.14**
470mm	89.0308	122.00	**150.06**
565mm	89.0309	154.00	**189.42**

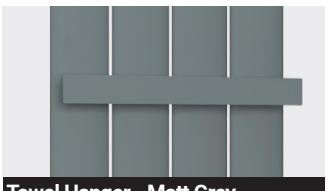

Towel Hanger - Matt Grey

Size	Code	€ Ex VAT	€ Inc VAT
280mm	89.0314	111.00	**136.53**
375mm	89.0315	118.00	**145.14**
470mm	89.0316	122.00	**150.06**
565mm	89.0317	154.00	**189.42**

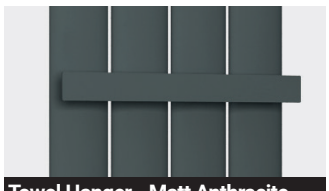

Towel Hanger - Matt Anthracite

Size	Code	€ Ex VAT	€ Inc VAT
280mm	89.0310	111.00	**136.53**
375mm	89.0311	118.00	**145.14**
470mm	89.0312	122.00	**150.06**
565mm	89.0313	154.00	**189.42**



Towel Hanger - Matt Cappuccino

Size	Code	€ Ex VAT	€ Inc VAT
280mm	89.0492	119.00	**146.37**
375mm	89.0493	131.00	**161.13**
470mm	89.0494	136.00	**167.28**
565mm	89.0495	170.00	**209.10**

TECHNICAL INFORMATION

Material: **Steel**

Vertical and Horizontal Radiators:

Single Flat style hangers are compatible with both Vertical and Horizontal radiators. (Depending on the radiators and hangers width)

Must be fitted before installation!

Hanger Fitting Widths
96/191/286/476mm



Aluminium Range

ADDINGTON ALUMINIUM TYPE 10 - GLOSS WHITE



Pictured 86.0372 Gloss White with 91.0113 Towel Hanger



Pictured 86.0360 Gloss White with 91.0082 Towel Hanger



Pictured 86.0358 Gloss White

Bar Dimensions (mm)

Vertical Bars 70 x 11mm

Aluminium Range

ADDINGTON ALUMINIUM TYPE 10 - GLOSS WHITE

A luxurious flat panelled radiator range with stunning clean lines which will be the focus of any room is now available also in aluminium. Available in horizontal or vertical sizes and different heights. Stunning towel hangers will complement the vertical design allowing room for your towels.

FEATURES

- Excellent heat conductivity and lightweight
- Only requires a low water volume
- Heats up very quickly
- Tested to BS EN 442 standards
- 5 Year Manufacturer's Warranty*
- Can be single or dual fuel, or all electric
- Radiators come with cover caps on top and bottom, the same colour as the radiator

* With conditions

Technical Tables & Drawings
Page 786-787

Towel Hangers
Page 591



TECHNICAL INFORMATION

All measurements in Height by Width. Heat output based on ▲T60˚C. For matching valves see pages 731-737. Corrosion inhibitor must be added to the heating system and maintained. Flow diverter must only be fitted when radiator installed on central heating system. For indirect heating systems only. Tappings are the width of the rail and 45mm off the wall.

For element types see pages 718-729.

For 500 and 600mm Heights : Element can only be installed horizontally on the bottom header. Radiators that are electric only are restricted to the heat output of the elements.



For element types see pages 718-729.

For 800, 1000, 1200, 1400 and 1800mm Heights: Element can be installed vertically on the right-hand or left-hand side on the bottom header. Radiators that are electric only are restricted to the heat output of the elements. For dual fuel installations, element must be installed on flow side.





Single profile construction

Radiator Valves
Page 731-737



500mm Height

Addington Aluminium Type 10 Radiators - Gloss White

Size H x W	Watts	BTU	Element Output	Element Type	Code	€ Ex VAT	€ Inc VAT
500 x 514mm	443	1512	150W	A	86.0348	401.00	**493.23**
500 x 588mm	507	1728	150W	A	86.0349	441.00	**542.43**

600mm Height

Addington Aluminium Type 10 Radiators - Gloss White

Size H x W	Watts	BTU	Element Output	Element Type	Code	€ Ex VAT	€ Inc VAT
600 x 292mm	315	1074	150W	A	86.0350	297.00	**365.31**
600 x 366mm	393	1342	150W	A	86.0351	343.00	**421.89**
600 x 440mm	472	1610	150W	A	86.0352	388.00	**477.24**
600 x 514mm	551	1879	300W	A	86.0353	434.00	**533.82**
600 x 588mm	629	2147	300W	A	86.0354	481.00	**591.63**
600 x 662mm	708	2416	300W	A	86.0355	527.00	**648.21**
600 x 810mm	865	2952	300W	A	86.0356	616.00	**757.68**
600 x 1032mm	1101	3758	600W	A	86.0357	758.00	**932.34**
600 x 1180mm	1259	4294	600W	A	86.0358	847.00	**1041.81**
600 x 1254mm	1337	4563	600W	A	86.0359	888.00	**1092.24**

800mm Height

Addington Aluminium Type10 Radiators - Gloss White

Size H x W	Watts	BTU	Element Output	Element Type	Code	€ Ex VAT	€ Inc VAT
800 x 514mm	709	2420	300W	A	86.0360	500.00	**615.00**
800 x 588mm	811	2766	300W	A	86.0361	555.00	**682.65**

1000mm Height

Addington Aluminium Type 10 Radiators - Gloss White

Size H x W	Watts	BTU	Element Output	Element Type	Code	€ Ex VAT	€ Inc VAT
1000 x 514mm	862	2940	300W	A	86.0362	569.00	**699.87**
1000 x 588mm	985	3360	300W	A	86.0363	632.00	**777.36**

1200mm Height

Addington Aluminium Type 10 Radiators - Gloss White

Size H x W	Watts	BTU	Element Output	Element Type	Code	€ Ex VAT	€ Inc VAT
1200 x 514mm	1010	3446	300W	A	86.0364	636.00	**782.28**
1200 x 588mm	1154	3938	600W	A	86.0365	709.00	**872.07**

1400mm Height

Addington Aluminium Type 10 Radiators - Gloss White

Size H x W	Watts	BTU	Element Output	Element Type	Code	€ Ex VAT	€ Inc VAT
1400 x 514mm	1154	3937	600W	A	86.0366	702.00	**863.46**
1400 x 588mm	1319	4499	600W	A	86.0367	783.00	**963.09**

1800mm Height

Addington Aluminium Type 10 Radiators - Gloss White

Size H x W	Watts	BTU	Element Output	Element Type	Code	€ Ex VAT	€ Inc VAT
1800 x 292mm	816	2786	600W	A	86.0368	528.00	**649.44**
1800 x 366mm	1021	3482	600W	A	86.0369	629.00	**773.67**
1800 x 440mm	1225	4179	600W	A	86.0370	724.00	**890.52**
1800 x 514mm	1429	4875	900W	A	86.0371	822.00	**1011.06**
1800 x 588mm	1633	5572	900W	A	86.0372	915.00	**1125.45**

ADDINGTON ALUMINIUM TYPE10 COVER CAP SETS - CHROME



Addington Aluminium Type10 Cover Cap Sets - Chrome

Description	Code	€ Ex VAT	€ Inc VAT
Cover Cap Set 292mm	86.0426	**45.00**	**55.35**
Cover Cap Set 366mm	86.0427	**52.00**	**63.96**
Cover Cap Set 440mm	86.0428	**56.00**	**68.88**
Cover Cap Set 514mm	86.0429	**65.00**	**79.95**
Cover Cap Set 588mm	86.0430	**70.00**	**86.10**
Cover Cap Set 662mm	86.0431	**75.00**	**92.25**
Cover Cap Set 810mm	86.0432	**89.00**	**109.47**
Cover Cap Set 1032mm	86.0433	**108.00**	**132.84**
Cover Cap Set 1180mm	86.0434	**121.00**	**148.83**
Cover Cap Set 1254mm	86.0435	**128.00**	**157.44**

Cover cap sets only include cover caps for the top of the radiator.

Aluminium Range

ADDINGTON ALUMINIUM TYPE 10 - MATT ANTHRACITE



Pictured 86.0395 Matt Anthracite with 91.0086 Towel Hangers x2



Pictured 86.0379 Matt Anthracite with 91.0093 Towel Hanger



Pictured 86.0382 Matt Anthracite

Bar Dimensions (mm)

Vertical Bars 70 x 11mm

Aluminium Range

ADDINGTON ALUMINIUM TYPE 10 - MATT ANTHRACITE

A luxurious flat panelled radiator range with stunning clean lines which will be the focus of any room is now available also in aluminium. Available in horizontal or vertical sizes and different heights. Stunning towel hangers will complement the vertical design allowing room for your towels.

FEATURES

- Excellent heat conductivity and lightweight
- Only requires a low water volume
- Heats up very quickly
- Tested to BS EN 442 standards
- 5 Year Manufacturer's Warranty*
- Can be single or dual fuel, or all electric
- Radiators come with cover caps on top and bottom, the same colour as the radiator

* With conditions

Technical Tables & Drawings
Page 786-787

Towel Hangers
Page 591

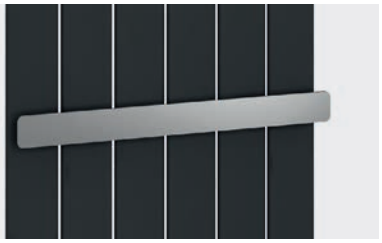

TECHNICAL INFORMATION

All measurements in Height by Width. Heat output based on ▲T60˚C. For matching valves see pages 731-737. Corrosion inhibitor must be added to the heating system and maintained. Flow diverter must only be fitted when radiator installed on central heating system. For indirect heating systems only. Tappings are the width of the rail and 45mm off the wall.

For element types see pages 718-729.

For 500 and 600mm Heights : Element can only be installed horizontally on the bottom header. Radiators that are electric only are restricted to the heat output of the elements.



For element types see pages 718-729.

For 800, 1000, 1200, 1400 and 1800mm Heights: Element can be installed vertically on the right-hand or left-hand side on the bottom header. Radiators that are electric only are restricted to the heat output of the elements. For dual fuel installations, element must be installed on flow side.





Single profile construction

Radiator Valves
Page 731-737

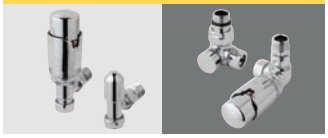

500mm Height

Addington Aluminium Type 10 Radiators - Matt Anthracite

Size H x W	Watts	BTU	Element Output	Element Type	Code	€ Ex VAT	€ Inc VAT
500 x 514mm	443	1512	150W	A	86.0373	401.00	**493.23**
500 x 588mm	507	1728	150W	A	86.0374	441.00	**542.43**

600mm Height

Addington Aluminium Type 10 Radiators - Matt Anthracite

Size H x W	Watts	BTU	Element Output	Element Type	Code	€ Ex VAT	€ Inc VAT
600 x 292mm	315	1074	150W	A	86.0375	297.00	**365.31**
600 x 366mm	393	1342	150W	A	86.0376	343.00	**421.89**
600 x 440mm	472	1610	150W	A	86.0377	388.00	**477.24**
600 x 514mm	551	1879	300W	A	86.0378	434.00	**533.82**
600 x 588mm	629	2147	300W	A	86.0379	481.00	**591.63**
600 x 662mm	708	2416	300W	A	86.0380	527.00	**648.21**
600 x 810mm	865	2952	300W	A	86.0381	616.00	**757.68**
600 x 1032mm	1101	3758	600W	A	86.0382	758.00	**932.34**
600 x 1180mm	1259	4294	600W	A	86.0383	847.00	**1041.81**
600 x 1254mm	1337	4563	600W	A	86.0384	888.00	**1092.24**

800mm Height

Addington Aluminium Type10 Radiators - Matt Anthracite

Size H x W	Watts	BTU	Element Output	Element Type	Code	€ Ex VAT	€ Inc VAT
800 x 514mm	709	2420	300W	A	86.0385	500.00	**615.00**
800 x 588mm	811	2766	300W	A	86.0386	555.00	**682.65**

1000mm Height

Addington Aluminium Type 10 Radiators - Matt Anthracite

Size H x W	Watts	BTU	Element Output	Element Type	Code	€ Ex VAT	€ Inc VAT
1000 x 514mm	862	2940	300W	A	86.0387	569.00	**699.87**
1000 x 588mm	985	3360	300W	A	86.0388	632.00	**777.36**

1200mm Height

Addington Aluminium Type 10 Radiators - Matt Anthracite

Size H x W	Watts	BTU	Element Output	Element Type	Code	€ Ex VAT	€ Inc VAT
1200 x 514mm	1010	3446	300W	A	86.0389	636.00	**782.28**
1200 x 588mm	1154	3938	600W	A	86.0390	709.00	**872.07**

1400mm Height

Addington Aluminium Type 10 Radiators - Matt Anthracite

Size H x W	Watts	BTU	Element Output	Element Type	Code	€ Ex VAT	€ Inc VAT
1400 x 514mm	1154	3937	600W	A	86.0391	702.00	**863.46**
1400 x 588mm	1319	4499	600W	A	86.0392	783.00	**963.09**

1800mm Height

Addington Aluminium Type 10 Radiators - Matt Anthracite

Size H x W	Watts	BTU	Element Output	Element Type	Code	€ Ex VAT	€ Inc VAT
1800 x 292mm	816	2786	600W	A	86.0393	528.00	**649.44**
1800 x 366mm	1021	3482	600W	A	86.0394	629.00	**773.67**
1800 x 440mm	1225	4179	600W	A	86.0395	724.00	**890.52**
1800 x 514mm	1429	4875	900W	A	86.0396	822.00	**1011.06**
1800 x 588mm	1633	5572	900W	A	86.0397	915.00	**1125.45**

ADDINGTON ALUMINIUM TYPE10 COVER CAP SETS - CHROME



Addington Aluminium Type10 Cover Cap Sets - Chrome

Description	Code	€ Ex VAT	€ Inc VAT
Cover Cap Set 292mm	86.0426	**45.00**	**55.35**
Cover Cap Set 366mm	86.0427	**52.00**	**63.96**
Cover Cap Set 440mm	86.0428	**56.00**	**68.88**
Cover Cap Set 514mm	86.0429	**65.00**	**79.95**
Cover Cap Set 588mm	86.0430	**70.00**	**86.10**
Cover Cap Set 662mm	86.0431	**75.00**	**92.25**
Cover Cap Set 810mm	86.0432	**89.00**	**109.47**
Cover Cap Set 1032mm	86.0433	**108.00**	**132.84**
Cover Cap Set 1180mm	86.0434	**121.00**	**148.83**
Cover Cap Set 1254mm	86.0435	**128.00**	**157.44**

Cover cap sets only include cover caps for the top of the radiator.

Aluminium Range

ADDINGTON ALUMINIUM TYPE 20 - GLOSS WHITE



Pictured 86.0409 Gloss White



Pictured 86.0402 Gloss White



Pictured 86.0406 Gloss White

Bar Dimensions (mm)

Vertical Bars 70 x 11mm

Aluminium Range

ADDINGTON ALUMINIUM TYPE 20 - GLOSS WHITE

A luxurious double flat panelled radiator range with stunning clean lines which will be the focus of any room is now available also in aluminium. Available in horizontal or vertical sizes and different heights.

FEATURES

- Excellent heat conductivity and lightweight
- Only requires a low water volume
- Heats up very quickly
- Tested to BS EN 442 standards
- 5 Year Manufacturer's Warranty*
- Can be single or dual fuel, or all electric
- Radiators come with cover caps on top and bottom, the same colour as the radiator

* With conditions

Technical Tables & Drawings
Page 786-787

TECHNICAL INFORMATION

All measurements in Height by Width. Heat output based on ▲T60˚C. For matching valves see pages 731-737. Corrosion inhibitor must be added to the heating system and maintained. Flow diverter must only be fitted when radiator installed on central heating system. For indirect heating systems only. Tappings are the width of the rail and 65mm off the wall.

For element types see pages 718-729.

For 600mm Heights : Element can only be installed horizontally on the bottom header. Radiators that are electric only are restricted to the heat output of the elements.



For element types see pages 718-729.

For 1800mm Heights: Element can be installed vertically on the right-hand or left-hand side on the bottom header. Radiators that are electric only are restricted to the heat output of the elements. For dual fuel installations, element must be installed on flow side.



600mm Height

Addington Aluminium Type 20 Radiators - Gloss White

Size H x W	Watts	BTU	Element Output	Element Type	Code	€ Ex VAT	€ Inc VAT
600 x 292mm	442	1509	150W	A	86.0398	377.00	**463.71**
600 x 366mm	553	1887	300W	A	86.0399	439.00	**539.97**
600 x 440mm	664	2264	300W	A	86.0400	499.00	**613.77**
600 x 514mm	774	2641	300W	A	86.0401	565.00	**694.95**
600 x 588mm	885	3019	300W	A	86.0402	629.00	**773.67**
600 x 662mm	995	3396	300W	A	86.0403	702.00	**863.46**
600 x 810mm	1216	4151	600W	A	86.0404	829.00	**1019.67**
600 x 1032mm	1548	5283	600W	A	86.0405	1022.00	**1257.06**
600 x 1180mm	1769	6038	900W	A	86.0406	1151.00	**1415.73**
600 x 1254mm	1880	6415	900W	A	86.0407	1220.00	**1500.60**

1800mm Height

Addington Aluminium Type 20 Radiators - Gloss White

Size H x W	Watts	BTU	Element Output	Element Type	Code	€ Ex VAT	€ Inc VAT
1800 x 366mm	1435	4896	600W	A	86.0408	906.00	**1114.38**
1800 x 440mm	1722	5875	900W	A	86.0409	1077.00	**1324.71**
1800 x 514mm	2009	6854	900W	A	86.0410	1262.00	**1552.26**
1800 x 588mm	2296	7834	900W	A	86.0411	1431.00	**1760.13**

Radiator Valves
Page 731-737

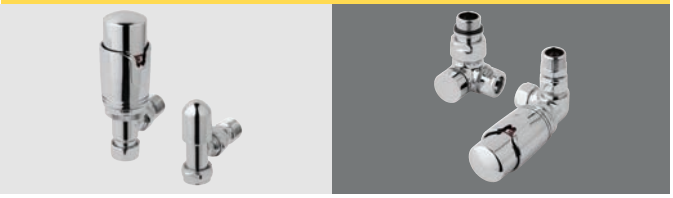



Double profile construction

Multi-Purpose Towel Hangers
Page 740

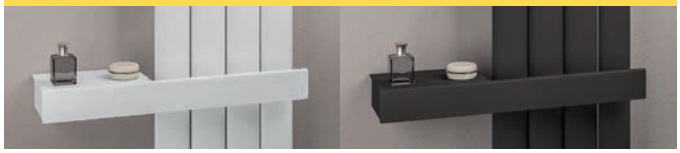

ADDINGTON ALUMINIUM TYPE 20 COVER CAP SETS - CHROME



Addington Aluminium Type 20 Cover Cap Sets - Chrome

Description	Code	€ Ex VAT	€ Inc VAT
Cover Cap Set 292mm	86.0436	**70.00**	**86.10**
Cover Cap Set 366mm	86.0437	**83.00**	**102.09**
Cover Cap Set 440mm	86.0438	**98.00**	**120.54**
Cover Cap Set 514mm	86.0439	**108.00**	**132.84**
Cover Cap Set 588mm	86.0440	**121.00**	**148.83**
Cover Cap Set 662mm	86.0441	**135.00**	**166.05**
Cover Cap Set 810mm	86.0442	**161.00**	**198.03**
Cover Cap Set 1032mm	86.0443	**198.00**	**243.54**
Cover Cap Set 1180mm	86.0444	**223.00**	**274.29**
Cover Cap Set 1254mm	86.0445	**208.00**	**255.84**

Cover cap sets only include cover caps for the top of the radiator.

Aluminium Range

ADDINGTON ALUMINIUM TYPE 20 - MATT ANTHRACITE



Pictured 86.0425 Matt Anthracite



Pictured 86.0417 Matt Anthracite



Pictured 86.0421 Matt Anthracite

Bar Dimensions (mm)

Vertical Bars 70 x 11mm

Aluminium Range

ADDINGTON ALUMINIUM TYPE 20 - MATT ANTHRACITE

A luxurious double flat panelled radiator range with stunning clean lines which will be the focus of any room is now available also in aluminium. Available in horizontal or vertical sizes and different heights.

FEATURES

- Excellent heat conductivity and lightweight
- Only requires a low water volume
- Heats up very quickly
- Tested to BS EN 442 standards
- 5 Year Manufacturer's Warranty*
- Can be single or dual fuel, or all electric
- Radiators come with cover caps on top and bottom, the same colour as the radiator

* With conditions

Technical Tables & Drawings
Page 786-787

TECHNICAL INFORMATION

All measurements in Height by Width. Heat output based on ▲T60˚C. For matching valves see pages 731-737. Corrosion inhibitor must be added to the heating system and maintained. Flow diverter must only be fitted when radiator installed on central heating system. For indirect heating systems only. Tappings are the width of the rail and 65mm off the wall.

For element types see pages 718-729.

For 600mm Heights : Element can only be installed horizontally on the bottom header. Radiators that are electric only are restricted to the heat output of the elements.

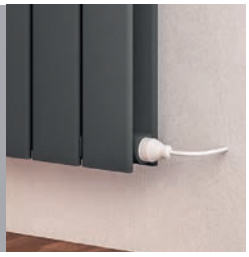

For element types see pages 718-729.

For 1800mm Heights: Element can be installed vertically on the right-hand or left-hand side on the bottom header. Radiators that are electric only are restricted to the heat output of the elements. For dual fuel installations, element must be installed on flow side.



600mm Height

Addington Aluminium Type 20 Radiators - Matt Anthracite

Size H x W	Watts	BTU	Element Output	Element Type	Code	€ Ex VAT	€ Inc VAT
600 x 292mm	442	1509	150W	A	86.0412	377.00	**463.71**
600 x 366mm	553	1887	300W	A	86.0413	439.00	**539.97**
600 x 440mm	664	2264	300W	A	86.0414	499.00	**613.77**
600 x 514mm	774	2641	300W	A	86.0415	565.00	**694.95**
600 x 588mm	885	3019	300W	A	86.0416	629.00	**773.67**
600 x 662mm	995	3396	300W	A	86.0417	702.00	**863.46**
600 x 810mm	1216	4151	600W	A	86.0418	829.00	**1019.67**
600 x 1032mm	1548	5283	600W	A	86.0419	1022.00	**1257.06**
600 x 1180mm	1769	6038	900W	A	86.0420	1151.00	**1415.73**
600 x 1254mm	1880	6415	900W	A	86.0421	1220.00	**1500.60**

1800mm Height

Addington Aluminium Type 20 Radiators - Matt Anthracite

Size H x W	Watts	BTU	Element Output	Element Type	Code	€ Ex VAT	€ Inc VAT
1800 x 366mm	1435	4896	600W	A	86.0422	906.00	**1114.38**
1800 x 440mm	1722	5875	900W	A	86.0423	1077.00	**1324.71**
1800 x 514mm	2009	6854	900W	A	86.0424	1262.00	**1552.26**
1800 x 588mm	2296	7834	900W	A	86.0425	1431.00	**1760.13**

Radiator Valves
Page 731-737

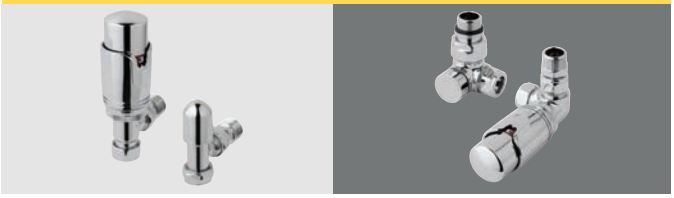



Multi-Purpose Towel Hangers
Page 740

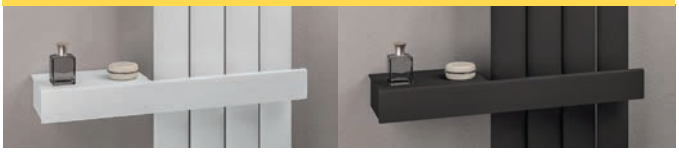

ADDINGTON ALUMINIUM TYPE 20 COVER CAP SETS - CHROME



Addington Aluminium Type 20 Cover Cap Sets - Chrome

Description	Code	€ Ex VAT	€ Inc VAT
Cover Cap Set 292mm	86.0436	**70.00**	**86.10**
Cover Cap Set 366mm	86.0437	**83.00**	**102.09**
Cover Cap Set 440mm	86.0438	**98.00**	**120.54**
Cover Cap Set 514mm	86.0439	**108.00**	**132.84**
Cover Cap Set 588mm	86.0440	**121.00**	**148.83**
Cover Cap Set 662mm	86.0441	**135.00**	**166.05**
Cover Cap Set 810mm	86.0442	**161.00**	**198.03**
Cover Cap Set 1032mm	86.0443	**198.00**	**243.54**
Cover Cap Set 1180mm	86.0444	**223.00**	**274.29**
Cover Cap Set 1254mm	86.0445	**208.00**	**255.84**

Cover cap sets only include cover caps for the top of the radiator.

Aluminium Range

ROSANO VERTICAL



Pictured 86.0008 Matt Anthracite with 101.0085 Towel Hanger x1 & 86.0112 Cover Caps x2 (Side connection valves shown)

Side or Bottom connection options



Pictured 86.0004 Matt White with 101.0049 Towel Hanger x1 & 86.0112 Cover Caps x2 (Side connection valves shown)

A luxurious flat panelled radiator range with stunning clean lines which will be the focus of any room. Available in a choice of colours and in horizontal or vertical designs. Stunning towel hangers will complement the vertical design allowing room for your towels.

Warranty 5 Year | Heating | All Electric | Dual-Fuel

Technical Tables & Drawings
Page 788-789

TECHNICAL INFORMATION

All measurements in Height by Width. Heat output based on ▲T60˚C. For matching valves see pages 731-737. Corrosion inhibitor must be added to the heating system and maintained. Flow diverter must only be fitted when radiator installed on central heating system. For indirect heating systems only. **Side connection:** Tappings are the width of the rail and 35 or 55mm off the wall. **Bottom connection:** Tappings are 90mm less than the width of the rail and 35 or 55mm

Aluminium Range

ROSANO VERTICAL

Pictured 86.0005 Matt Anthracite with 86.0026 Towel Hangers (bottom connection valves shown)



For all Rosano Matt White, Matt Anthacite, Matt Black, Chrome and Premium Towel Hangers, please refer to page 640-641.

Matt White | Matt Anthracite | Matt Black

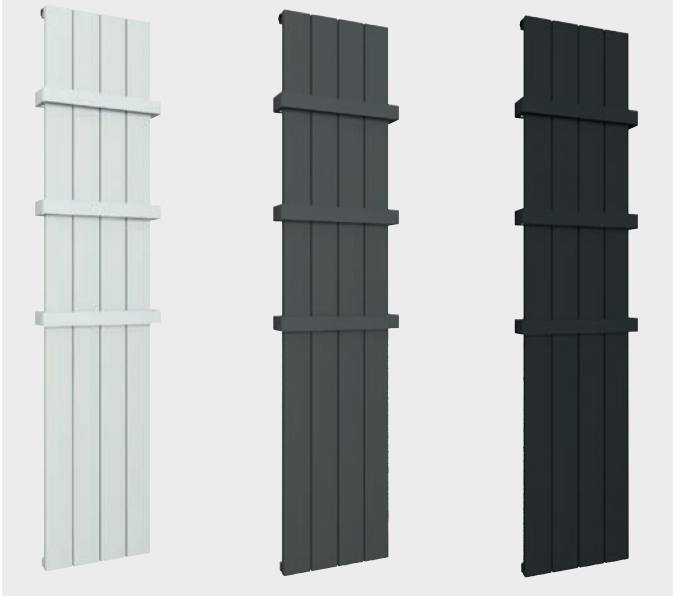

Rosano Vertical Aluminium Radiators - Matt White

Size H x W	Watts	BTU	Element Output	Element Type	Code	€ Ex VAT	€ Inc VAT
600 x 280mm	316	1078	150W	A, A+	86.0147	297.00	**365.31**
1800 x 280mm	948	3235	450W	A, A+	86.0001	481.00	**591.63**
1800 x 375mm	1264	4313	750W	A, A+	86.0004	614.00	**755.22**
1800 x 470mm	1580	5391	900W	A, A+	86.0007	749.00	**921.27**
1800 x 565mm	1896	6469	1000W	A, A+	86.0284	909.00	**1118.07**

Rosano Vertical Aluminium Radiators - Matt Anthracite

Size H x W	Watts	BTU	Element Output	Element Type	Code	€ Ex VAT	€ Inc VAT
600 x 280mm	316	1078	150W	A, A+	86.0148	297.00	**365.31**
1800 x 280mm	948	3235	450W	A, A+	86.0002	481.00	**591.63**
1800 x 375mm	1264	4313	750W	A, A+	86.0005	614.00	**755.22**
1800 x 470mm	1580	5391	900W	A, A+	86.0008	749.00	**921.27**
1800 x 565mm	1896	6469	1000W	A, A+	86.0285	909.00	**1118.07**

Rosano Vertical Aluminium Radiators - Matt Black

Size H x W	Watts	BTU	Element Output	Element Type	Code	€ Ex VAT	€ Inc VAT
600 x 280mm	316	1078	150W	A, A+	86.0149	297.00	**365.31**
1800 x 280mm	948	3235	450W	A, A+	86.0003	481.00	**591.63**
1800 x 375mm	1264	4313	750W	A, A+	86.0006	614.00	**755.22**
1800 x 470mm	1580	5391	900W	A, A+	86.0009	749.00	**921.27**
1800 x 565mm	1896	6469	1000W	A, A+	86.0286	909.00	**1118.07**

Prices include radiator and wall fixing sets, valves and accessories extra.

FEATURES

- Excellent heat conductivity and lightweight
- Only requires a low water volume
- Heats up very quickly
- Side or bottom connection options (only on vertical sizes)
- Tested to BS EN 442 standards
- 5 Year Manufacturer's Warranty*
- Can be single or dual fuel, or all electric
- Radiators come with cover caps on top and bottom, the same colour as the radiator

* With conditions



Rosano Cover Cap Sets - Chrome

Description	Code	€ Ex VAT	€ Inc VAT
Cover Cap Set 280mm	86.0111	37.00	**45.51**
Cover Cap Set 375mm	86.0112	45.00	**55.35**
Cover Cap Set 470mm	86.0113	51.00	**62.73**
Cover Cap Set 565mm	86.0309	61.00	**75.03**

Cover cap sets only include cover caps for the top of the radiator.

For element types see pages 718-729.

Element can be installed vertically on the right-hand side or left-hand side on the bottom header. Radiators that are electric only are restricted to the heat output of the elements. For dual fuel installations, element must be installed on flow side.



Multi-Purpose Towel Hangers

Page 740

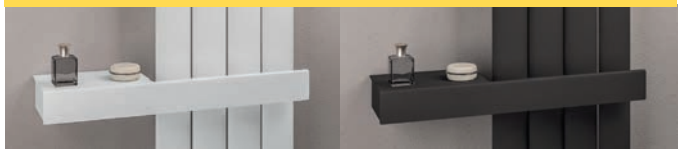

Aluminium Range

ROSANO HORIZONTAL



A luxurious flat panelled radiator range with stunning clean lines which will be the focus of any room. Available in a choice of colours and in horizontal or vertical designs.

TECHNICAL INFORMATION

All measurements in Height by Width. Heat output based on ▲T60˚C. For matching valves see pages 731-737. Corrosion inhibitor must be added to the heating system and maintained. Flow diverter must only be fitted when radiator installed on central heating system. For indirect heating systems only. Tappings are the width of the rail and 35 or 55mm off the wall.

Radiator Valves
Page 731-737



Aluminium Range

ROSANO HORIZONTAL

Pictured 86.0016 Matt White with 89.0372 Towel Hanger

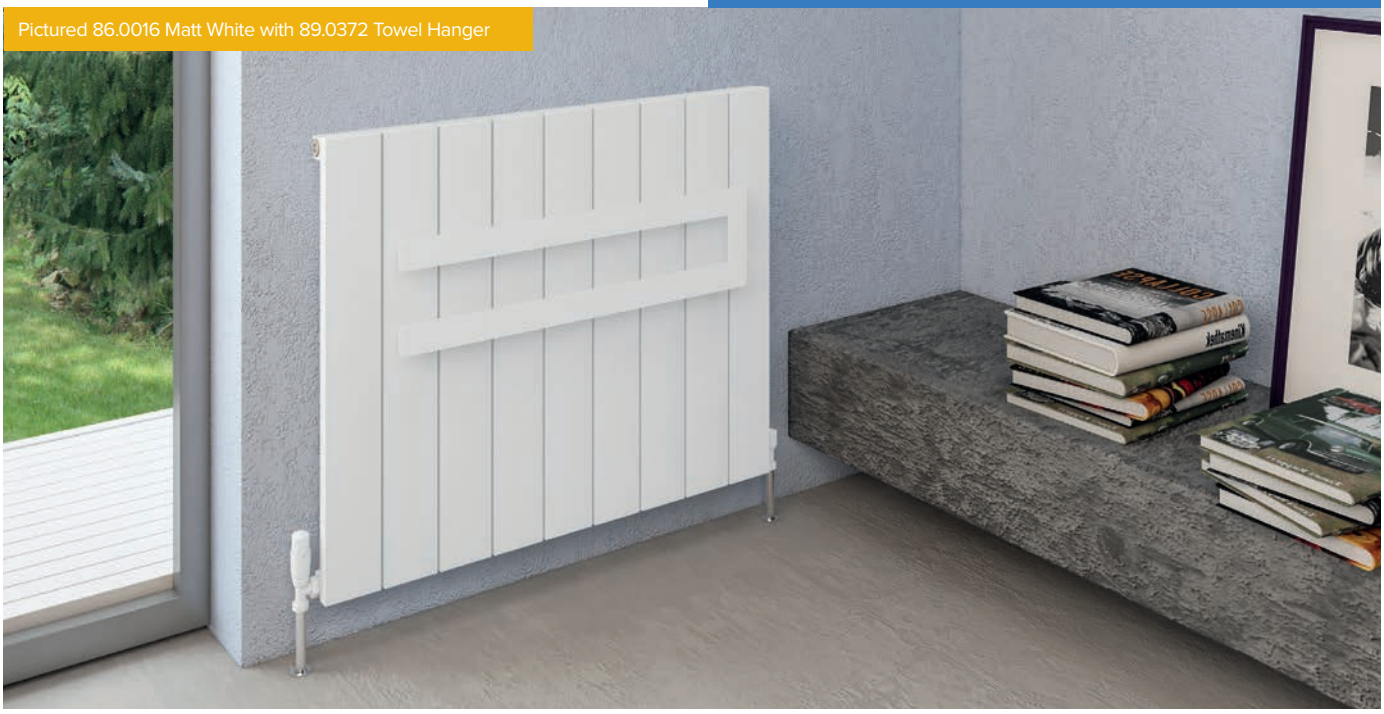

Rosano Horizontal Aluminium Radiators - Matt White

Size H x W	Watts	BTU	Element Output	Element Type	Code	€ Ex VAT	€ Inc VAT
600 x 470mm	555	1894	300W	A, A+, C, H	86.0010	384.00	**472.32**
600 x 660mm	777	2651	450W	A, A+, C, H	86.0013	509.00	**626.07**
600 x 850mm	999	3409	600W	A, A+, C, H	86.0016	629.00	**773.67**
600 x 1040mm	1221	4166	750W	A, A+, C, H	86.0019	755.00	**928.65**
600 x 1230mm	1443	4924	900W	A, A+, C, H	86.0022	875.00	**1076.25**

Rosano Horizontal Aluminium Radiators - Matt Anthracite

Size H x W	Watts	BTU	Element Output	Element Type	Code	€ Ex VAT	€ Inc VAT
600 x 470mm	555	1894	300W	A, A+, C, H	86.0011	384.00	**472.32**
600 x 660mm	777	2651	450W	A, A+, C, H	86.0014	509.00	**626.07**
600 x 850mm	999	3409	600W	A, A+, C, H	86.0017	629.00	**773.67**
600 x 1040mm	1221	4166	750W	A, A+, C, H	86.0020	755.00	**928.65**
600 x 1230mm	1443	4924	900W	A, A+, C, H	86.0023	875.00	**1076.25**

Rosano Horizontal Aluminium Radiators - Matt Black

Size H x W	Watts	BTU	Element Output	Element Type	Code	€ Ex VAT	€ Inc VAT
600 x 470mm	555	1894	300W	A, A+, C, H	86.0012	384.00	**472.32**
600 x 660mm	777	2651	450W	A, A+, C, H	86.0015	509.00	**626.07**
600 x 850mm	999	3409	600W	A, A+, C, H	86.0018	629.00	**773.67**
600 x 1040mm	1221	4166	750W	A, A+, C, H	86.0021	755.00	**928.65**
600 x 1230mm	1443	4924	900W	A, A+, C, H	86.0024	875.00	**1076.25**

Prices include radiator and wall fixing sets, valves and accessories extra.

FEATURES

- Excellent heat conductivity and lightweight
- Only requires a low water volume
- Heats up very quickly
- Tested to BS EN 442 standards
- 5 Year Manufacturer's Warranty*
- Can be single or dual fuel, or all electric
- Radiators come with cover caps on top and bottom, the same colour as the radiator

* With conditions

For element types see pages 718-729.

Element can only be installed horizontally on the bottom header. Radiators that are electric only are restricted to the heat output of the elements (Type C up to 900 watts).



Matt White



Matt Anthracite

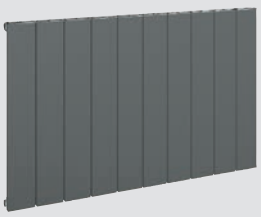

Matt Black



For all Rosano Matt White, Matt Anthacite, Matt Black, Chrome and Premium Towel Hangers, please refer to page 640-641.



Rosano Cover Cap Sets - Chrome

Description	Code	€ Ex VAT	€ Inc VAT
Cover Cap Set 470mm	86.0113	51.00	**62.73**
Cover Cap Set 660mm	86.0114	66.00	**81.18**
Cover Cap Set 850mm	86.0115	80.00	**98.40**
Cover Cap Set 1040mm	86.0116	93.00	**114.39**
Cover Cap Set 1230mm	86.0117	111.00	**136.53**

Cover cap sets only include cover caps for the top of the radiator.

Aluminium Range

ROSANO STANDARD TOWEL HANGERS



Towel Hanger - Matt White

Size	Code	€ Ex VAT	€ Inc VAT
280mm	89.0177	83.00	**102.09**
375mm	89.0178	87.00	**107.01**
470mm	89.0179	98.00	**120.54**
565mm	86.0333	104.00	**127.92**



Towel Hanger - Matt Anthracite

Size	Code	€ Ex VAT	€ Inc VAT
280mm	89.0180	83.00	**102.09**
375mm	89.0181	87.00	**107.01**
470mm	89.0182	98.00	**120.54**
565mm	86.0334	104.00	**127.92**



Towel Hanger - Matt Black

Size	Code	€ Ex VAT	€ Inc VAT
280mm	89.0183	83.00	**102.09**
375mm	89.0184	87.00	**107.01**
470mm	89.0185	98.00	**120.54**
565mm	86.0335	104.00	**127.92**

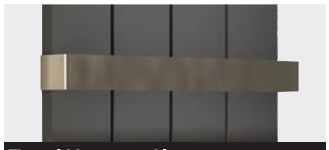

Towel Hanger - Chrome

Size	Code	€ Ex VAT	€ Inc VAT
280mm	86.0025	70.00	**86.10**
375mm	86.0026	83.00	**102.09**
470mm	86.0027	91.00	**111.93**
565mm	86.0336	96.00	**118.08**

TECHNICAL INFORMATION

Material: **Steel (Premium: Stainless Steel - Grade 304)**

Vertical Radiators:

1800mm height radiators comes with 3 pre-drilled towel hanger locations, with a maximum of 3 towel hangers - all widths; 280, 375, 470 and 565mm. 600mm height radiators comes with 1 pre-drilled towel hanger location, with a maximum of 1 towel hanger - 280mm width. The standard towel hangers are only compatible with the Vertical Radiators.

Can be fitted after installation only on high adjustment bracket fitting.

Horizontal Radiators:

Don't have holes for Standard Towel Hangers (except 470mm width). Standard Towel Hanger can not be fitted. The Rosano Standard Towel Hangers will add approx 8mm width on each side once fitted to the radiator.

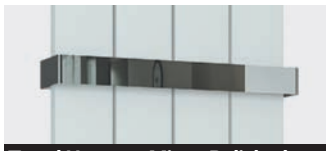

Towel Hanger - Mirror Polished Premium

Size	Code	€ Ex VAT	€ Inc VAT
280mm	86.0198	97.00	**119.31**
375mm	86.0199	107.00	**131.61**
470mm	86.0200	115.00	**141.45**
565mm	86.0337	124.00	**152.52**

ROSANO FLAT STYLE TOWEL HANGERS

SINGLE FLAT STYLE



Towel Hanger - Matt White

Size	Code	€ Ex VAT	€ Inc VAT
280mm	89.0283	96.00	**118.08**
375mm	89.0284	105.00	**129.15**
470mm	89.0285	118.00	**145.14**
565mm	91.0163	126.00	**154.98**
660mm	89.0286	133.00	**163.59**
850mm	89.0287	149.00	**183.27**

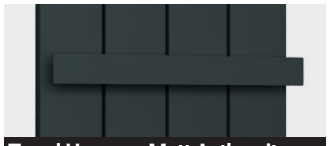

Towel Hanger - Matt Anthracite

Size	Code	€ Ex VAT	€ Inc VAT
280mm	89.0288	96.00	**118.08**
375mm	89.0289	105.00	**129.15**
470mm	89.0290	118.00	**145.14**
565mm	91.0164	126.00	**154.98**
660mm	89.0291	133.00	**163.59**
850mm	89.0292	149.00	**183.27**

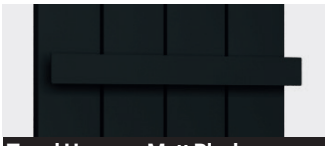

Towel Hanger - Matt Black

Size	Code	€ Ex VAT	€ Inc VAT
280mm	89.0293	96.00	**118.08**
375mm	89.0294	105.00	**129.15**
470mm	89.0295	118.00	**145.14**
565mm	91.0165	126.00	**154.98**
660mm	89.0296	133.00	**163.59**
850mm	89.0297	149.00	**183.27**

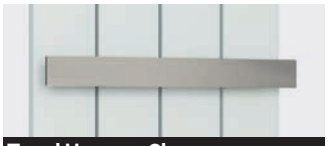

Towel Hanger - Chrome

Size	Code	€ Ex VAT	€ Inc VAT
280mm	91.0094	131.00	**161.13**
375mm	91.0095	133.00	**163.59**
470mm	91.0096	136.00	**167.28**
565mm	91.0166	138.00	**169.74**
660mm	91.0097	143.00	**175.89**
850mm	91.0098	153.00	**188.19**

DOUBLE FLAT STYLE

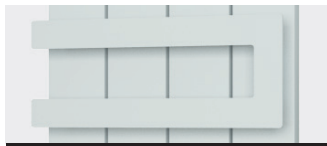

Towel Hanger - Matt White

Size	Code	€ Ex VAT	€ Inc VAT
280mm	89.0369	117.00	**143.91**
375mm	89.0370	122.00	**150.06**
470mm	89.0371	138.00	**169.74**
565mm	91.0167	152.00	**186.96**
660mm	89.0372	161.00	**198.03**
850mm	89.0373	180.00	**221.40**

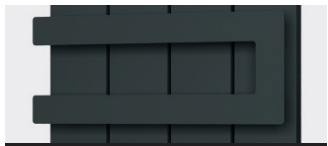

Towel Hanger - Matt Anthracite

Size	Code	€ Ex VAT	€ Inc VAT
280mm	89.0374	117.00	**143.91**
375mm	89.0375	122.00	**150.06**
470mm	89.0376	138.00	**169.74**
565mm	91.0168	152.00	**186.96**
660mm	89.0377	161.00	**198.03**
850mm	89.0378	180.00	**221.40**

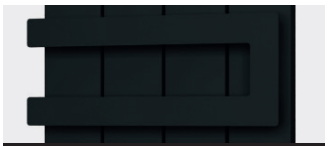

Towel Hanger - Matt Black

Size	Code	€ Ex VAT	€ Inc VAT
280mm	89.0379	117.00	**143.91**
375mm	89.0380	122.00	**150.06**
470mm	89.0381	138.00	**169.74**
565mm	91.0169	152.00	**186.96**
660mm	89.0382	161.00	**198.03**
850mm	89.0383	180.00	**221.40**



Towel Hanger - Chrome

Size	Code	€ Ex VAT	€ Inc VAT
280mm	91.0114	166.00	**204.18**
375mm	91.0115	173.00	**212.79**
470mm	91.0116	175.00	**215.25**
565mm	91.0170	184.00	**226.32**
660mm	91.0117	189.00	**232.47**
850mm	91.0118	205.00	**252.15**

TECHNICAL INFORMATION

Material: **Steel**

Vertical and Horizontal Radiators:

Flat & Double Flat Style Hangers are compatible with both Vertical and Horizontal radiators.(Depending on the radiators and hangers width)

Must be fitted before installation!

Hanger Fitting Widths
96/191/286/381/476/666mm



Hanger Fitting Widths
96/191/286/381/476/666mm



Aluminium Range

ROSANO FLAT TRIPLE TOWEL HANGER

Brushed Stainless Steel



Polished Stainless Steel

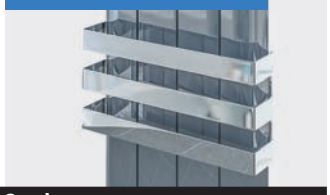

Flat Triple Hanger - Brushed Stainless Steel

Size	Code	€ Ex VAT	€ Inc VAT
280mm	101.0048	320.00	**393.60**
375mm	101.0049	348.00	**428.04**
470mm	101.0050	398.00	**489.54**
565mm	101.0064	447.00	**549.81**

Flat Triple Hanger - Polished Stainless Steel

Size	Code	€ Ex VAT	€ Inc VAT
280mm	101.0054	320.00	**393.60**
375mm	101.0055	348.00	**428.04**
470mm	101.0056	398.00	**489.54**
565mm	101.0065	447.00	**549.81**

ROSANO CURVED TRIPLE TOWEL HANGER

Brushed Stainless Steel



Polished Stainless Steel

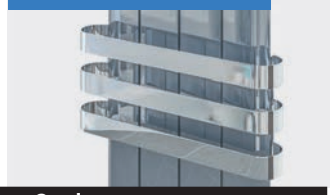

Curved Triple Hanger - Brushed Stainless Steel

Size	Code	€ Ex VAT	€ Inc VAT
280mm	101.0051	320.00	**393.60**
375mm	101.0052	348.00	**428.04**
470mm	101.0053	398.00	**489.54**
565mm	101.0066	447.00	**549.81**

Curved Triple Hanger - Polished Stainless Steel

Size	Code	€ Ex VAT	€ Inc VAT
280mm	101.0057	320.00	**393.60**
375mm	101.0058	348.00	**428.04**
470mm	101.0059	398.00	**489.54**
565mm	101.0067	447.00	**549.81**

TECHNICAL INFORMATION

Material: **Stainless Steel - Grade 304**

Vertical Radiators:

1800mm height radiators comes with 3 pre-drilled towel hanger locations. 600mm height radiators come with 1 pre-drilled towel hanger location. The flat triple & curved triple towel hangers are only compatible with the Vertical Radiators and can be fitted to the pre-drilled holes on 1800mm & 600mm height radiators. **Can be fitted after installation only on high adjustment bracket fitting.**

Horizontal Radiators:

The flat triple & curved triple towel hangers are not suitable for horizontal radiators.

ROSANO DESIGNER TOWEL HANGERS

Square Style



Square Towel Hanger - Matt White

Size	Code	€ Ex VAT	€ Inc VAT
375mm	101.0075	96.00	**118.08**
470mm	101.0076	105.00	**129.15**
565mm	101.0077	122.00	**150.06**

Square Towel Hanger - Matt Anthracite

Size	Code	€ Ex VAT	€ Inc VAT
375mm	101.0078	96.00	**118.08**
470mm	101.0079	105.00	**129.15**
565mm	101.0080	122.00	**150.06**

Square Towel Hanger - Matt Black

Size	Code	€ Ex VAT	€ Inc VAT
375mm	101.0081	96.00	**118.08**
470mm	101.0082	105.00	**129.15**
565mm	101.0083	122.00	**150.06**

Square Towel Hanger - Chrome

Size	Code	€ Ex VAT	€ Inc VAT
375mm	101.0084	111.00	**136.53**
470mm	101.0085	128.00	**157.44**
565mm	101.0086	149.00	**183.27**

Triangle Style



Triangle Towel Hanger - Matt White

Size	Code	€ Ex VAT	€ Inc VAT
375mm	101.0087	98.00	**120.54**
470mm	101.0088	111.00	**136.53**
565mm	101.0089	129.00	**158.67**

Triangle Towel Hanger - Matt Anthracite

Size	Code	€ Ex VAT	€ Inc VAT
375mm	101.0090	98.00	**120.54**
470mm	101.0091	111.00	**136.53**
565mm	101.0092	129.00	**158.67**

Triangle Towel Hanger - Matt Black

Size	Code	€ Ex VAT	€ Inc VAT
375mm	101.0093	98.00	**120.54**
470mm	101.0094	111.00	**136.53**
565mm	101.0095	129.00	**158.67**

Triangle Towel Hanger - Chrome

Size	Code	€ Ex VAT	€ Inc VAT
375mm	101.0096	112.00	**137.76**
470mm	101.0097	129.00	**158.67**
565mm	101.0098	153.00	**188.19**

Circle Style



Circle Towel Hanger - Matt White

Size	Code	€ Ex VAT	€ Inc VAT
375mm	101.0099	104.00	**127.92**
470mm	101.0100	114.00	**140.22**
565mm	101.0101	133.00	**163.59**

Circle Towel Hanger - Matt Anthracite

Size	Code	€ Ex VAT	€ Inc VAT
375mm	101.0102	104.00	**127.92**
470mm	101.0103	114.00	**140.22**
565mm	101.0104	133.00	**163.59**

Circle Towel Hanger - Matt Black

Size	Code	€ Ex VAT	€ Inc VAT
375mm	101.0105	104.00	**127.92**
470mm	101.0106	114.00	**140.22**
565mm	101.0107	133.00	**163.59**

Circle Towel Hanger - Chrome

Size	Code	€ Ex VAT	€ Inc VAT
375mm	101.0108	112.00	**137.76**
470mm	101.0109	131.00	**161.13**
565mm	101.0110	154.00	**189.42**

TECHNICAL INFORMATION

Material: **Steel**

Square, Triangle and Circle Towel Hangers are only compatible with vertical radiators and can be fitted to one of the three pre-drilled holes on the 1800mm height radiators. Square, Triangle and Circle Towel Hangers will add approx 8mm width on each side once fitted to the radiator. **Can be fitted after installation only on high adjustment bracket fitting.**

Aluminium Range

PERETTI VERTICAL

Side or Bottom connection options



Pictured 86.0178 Polished Aluminium with 86.0078 Towel Hangers (side connection valves shown)



Pictured 86.0060 Matt Black with 101.0109 Towel Hanger x1 (bottom connection valves shown)

A refined version of the designer flat panelled radiators with a curve to the end two panels. This radiator will add a touch of sophistication creating an impact in any room. Available in both vertical and horizontal designs as well as four different colours for maximium choice. Stunning towel hangers will complement the vertical design allowing room for your towels.

FEATURES

- Excellent heat conductivity and lightweight
- Only requires a low water volume
- Heats up very quickly
- Side or bottom connection options (only on vertical sizes)
- Tested to BS EN 442 standards
- 5 Year Manufacturer's Warranty*
- Can be single or dual fuel, or all electric
- Radiators come with cover caps on top and bottom, the same colour as the radiator

* With conditions

Technical Tables & Drawings
Page 788-789

Warranty 5 Year | Heating | All Electric | Dual-Fuel

TECHNICAL INFORMATION

All measurements in Height by Width. Heat output based on ▲T60˚C. For matching valves see pages 731-737. Corrosion inhibitor must be added to the heating system and maintained. Flow diverter must only be fitted when radiator installed on central heating system. For indirect heating systems only. **Side connection:** Tappings are the width of the rail and 35 or 55mm off the wall. **Bottom connection:** Tappings are 90mm less than the width of the rail and 35 or 55mm off the wall.

For all Peretti Matt White, Matt Anthracite, Matt Black, Chrome and Premium Towel Hangers, please refer to page 646-647.



Aluminium Range

PERETTI VERTICAL

Matt White | Matt Anthracite | Matt Black | Polished

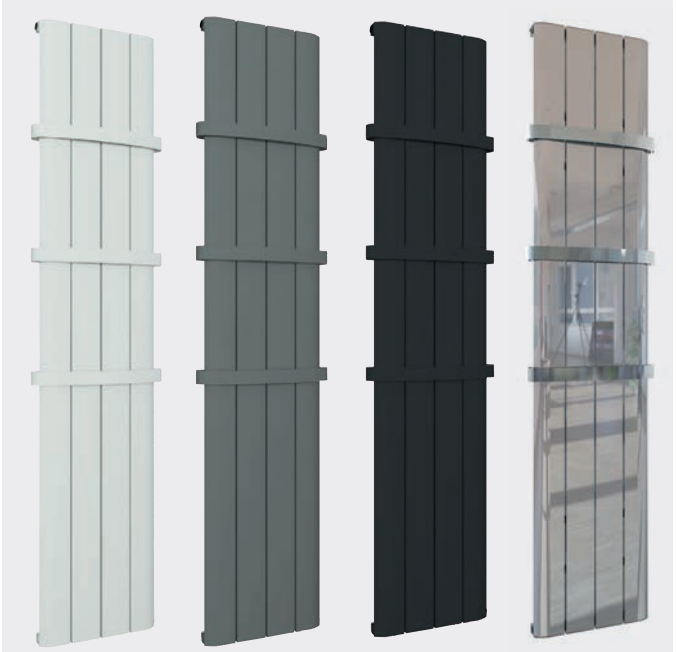



Pictured 86.0056 Matt White (side connection valves shown)

Peretti Vertical Aluminium Radiators - Matt White

Size H x W	Watts	BTU	Element Output	Element Type	Code	€ Ex VAT	€ Inc VAT
600 x 280mm	316	1078	150W	A, A+	86.0150	297.00	**365.31**
1800 x 280mm	948	3235	450W	A, A+	86.0053	481.00	**591.63**
1800 x 375mm	1264	4313	750W	A, A+	86.0056	614.00	**755.22**
1800 x 470mm	1580	5391	900W	A, A+	86.0059	749.00	**921.27**
1800 x 565mm	1896	6469	1000W	A, A+	86.0287	909.00	**1118.07**

Peretti Vertical Aluminium Radiators - Matt Anthracite

Size H x W	Watts	BTU	Element Output	Element Type	Code	€ Ex VAT	€ Inc VAT
600 x 280mm	316	1078	150W	A, A+	86.0151	297.00	**365.31**
1800 x 280mm	948	3235	450W	A, A+	86.0054	481.00	**591.63**
1800 x 375mm	1264	4313	750W	A, A+	86.0057	614.00	**755.22**
1800 x 470mm	1580	5391	900W	A, A+	86.0060	749.00	**921.27**
1800 x 565mm	1896	6469	1000W	A, A+	86.0288	909.00	**1118.07**

Peretti Vertical Aluminium Radiators - Matt Black

Size H x W	Watts	BTU	Element Output	Element Type	Code	€ Ex VAT	€ Inc VAT
600 x 280mm	316	1078	150W	A, A+	86.0152	297.00	**365.31**
1800 x 280mm	948	3235	450W	A, A+	86.0055	481.00	**591.63**
1800 x 375mm	1264	4313	750W	A, A+	86.0058	614.00	**755.22**
1800 x 470mm	1580	5391	900W	A, A+	86.0061	749.00	**921.27**
1800 x 565mm	1896	6469	1000W	A, A+	86.0289	909.00	**1118.07**

Peretti Vertical Aluminium Radiators - Polished Aluminium

Size H x W	Watts	BTU	Element Output	Element Type	Code	€ Ex VAT	€ Inc VAT
600 x 280mm	307	1046	150W	A, A+	86.0176	324.00	**398.52**
1800 x 280mm	920	3138	450W	A, A+	86.0177	565.00	**694.95**
1800 x 375mm	1226	4184	750W	A, A+	86.0178	724.00	**890.52**
1800 x 470mm	1533	5229	900W	A, A+	86.0179	884.00	**1087.32**
1800 x 565mm	1839	6275	1000W	A, A+	86.0290	1022.00	**1257.06**

Prices include radiator and wall fixing sets, valves and accessories extra.



Peretti Cover Cap Sets - Chrome

Description	Code	€ Ex VAT	€ Inc VAT
Cover Cap Set 280mm	86.0125	37.00	**45.51**
Cover Cap Set 375mm	86.0126	45.00	**55.35**
Cover Cap Set 470mm	86.0113	51.00	**62.73**
Cover Cap Set 565mm	86.0310	61.00	**75.03**

Cover cap sets only include cover caps for the top of the radiator.

For element types see pages 718-729.

Element can be installed vertically on the right-hand side or left-hand side on the bottom header. Radiators that are electric only are restricted to the heat output of the elements. For dual fuel installations, element must be installed on flow side.



Multi-Purpose Towel Hangers
Page 740

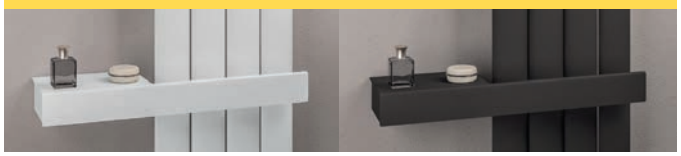

Aluminium Range

PERETTI HORIZONTAL

Pictured 86.0183 Polished Aluminium with 91.0117 Towel Hanger



A refined version of the designer flat panelled radiators with a curve to the end two panels. This radiator will add a touch of sophistication creating an impact in any room. Available in both vertical and horizontal designs as well as four different colours for maximium choice. Stunning towel hangers will complement the vertical design allowing room for your towels.

FEATURES

- Excellent heat conductivity and lightweight
- Only requires a low water volume
- Heats up very quickly
- Tested to BS EN 442 standards
- 5 Year Manufacturer's Warranty*
- Can be single or dual fuel, or all electric
- Radiators come with cover caps on top and bottor the same colour as the radiator

* With conditions

Technical Tables & Drawings
Page 788-789

TECHNICAL INFORMATION

All measurements in Height by Width. Heat output based on ▲T60˚C. For matching valves see pages 731-737. Corrosion inhibitor must be added to the heating system and maintained. Flow diverter must only be fitted when radiator installed on central heating system. For indirect heating systems only. Tappings are the width of the rail and 35 or 55mm off the wall.

For all Peretti Matt White, Matt Anthacite, Matt Black, Chrome and Premium Towel Hangers, please refer to page 646-647.



Radiator Valves
Page 731-737





Aluminium Range

PERETTI HORIZONTAL

Pictured 86.0069 Matt Anthracite with 89.0290 Towel Hanger



Peretti Horizontal Aluminium Radiators - Matt White

Size H x W	Watts	BTU	Element Output	Element Type	Code	€ Ex VAT	€ Inc VAT
600 x 470mm	555	1894	300W	A, A+, C, H	86.0062	384.00	**472.32**
600 x 660mm	777	2651	450W	A, A+, C, H	86.0065	509.00	**626.07**
600 x 850mm	999	3409	600W	A, A+, C, H	86.0068	629.00	**773.67**
600 x 1040mm	1221	4166	750W	A, A+, C, H	86.0071	755.00	**928.65**
600 x 1230mm	1443	4924	900W	A, A+, C, H	86.0074	877.00	**1078.71**

Peretti Horizontal Aluminium Radiators - Matt Anthracite

Size H x W	Watts	BTU	Element Output	Element Type	Code	€ Ex VAT	€ Inc VAT
600 x 470mm	555	1894	300W	A, A+, C, H	86.0063	374.00	**460.02**
600 x 660mm	777	2651	450W	A, A+, C, H	86.0066	509.00	**626.07**
600 x 850mm	999	3409	600W	A, A+, C, H	86.0069	629.00	**773.67**
600 x 1040mm	1221	4166	750W	A, A+, C, H	86.0072	755.00	**928.65**
600 x 1230mm	1443	4924	900W	A, A+, C, H	86.0075	877.00	**1078.71**

Peretti Horizontal Aluminium Radiators - Matt Black

Size H x W	Watts	BTU	Element Output	Element Type	Code	€ Ex VAT	€ Inc VAT
600 x 470mm	555	1894	300W	A, A+, C, H	86.0064	384.00	**472.32**
600 x 660mm	777	2651	450W	A, A+, C, H	86.0067	509.00	**626.07**
600 x 850mm	999	3409	600W	A, A+, C, H	86.0070	629.00	**773.67**
600 x 1040mm	1221	4166	750W	A, A+, C, H	86.0073	755.00	**928.65**
600 x 1230mm	1443	4924	900W	A, A+, C, H	86.0076	877.00	**1078.71**

Peretti Horizontal Aluminium Radiators - Polished Aluminium

Size H x W	Watts	BTU	Element Output	Element Type	Code	€ Ex VAT	€ Inc VAT
600 x 470mm	538	1837	300W	A, A+, C, H	86.0180	454.00	**558.42**
600 x 660mm	754	2571	450W	A, A+, C, H	86.0181	601.00	**739.23**
600 x 850mm	969	3307	600W	A, A+, C, H	86.0182	744.00	**915.12**
600 x 1040mm	1184	4041	750W	A, A+, C, H	86.0183	888.00	**1092.24**
600 x 1230mm	1400	4776	900W	A, A+, C, H	86.0184	1035.00	**1273.05**

Prices include radiator and wall fixing sets, valves and accessories extra.

For element types see pages 718-729.

Element can only be installed horizontally on the bottom header. Radiators that are electric only are restricted to the heat output of the elements (Type C up to 900 watts).



Matt White



Matt Anthracite



Matt Black



Polished Aluminium





Peretti Cover Cap Sets - Chrome

Description	Code	€ Ex VAT	€ Inc VAT
Cover Cap Set 470mm	86.0127	51.00	**62.73**
Cover Cap Set 660mm	86.0128	66.00	**81.18**
Cover Cap Set 850mm	86.0129	80.00	**98.40**
Cover Cap Set 1040mm	86.0130	101.00	**124.23**
Cover Cap Set 1230mm	86.0131	111.00	**136.53**

Cover cap sets only include cover caps for the top of the radiator.

Aluminium Range

PERETTI STANDARD TOWEL HANGERS



Towel Hanger - Matt White

Size	Code	€ Ex VAT	€ Inc VAT
280mm	89.0186	83.00	**102.09**
375mm	89.0187	87.00	**107.01**
470mm	89.0188	98.00	**120.54**
565mm	86.0338	104.00	**127.92**



Towel Hanger - Matt Anthracite

Size	Code	€ Ex VAT	€ Inc VAT
280mm	89.0189	83.00	**102.09**
375mm	89.0190	87.00	**107.01**
470mm	89.0191	98.00	**120.54**
565mm	86.0339	104.00	**127.92**



Towel Hanger - Matt Black

Size	Code	€ Ex VAT	€ Inc VAT
280mm	89.0192	83.00	**102.09**
375mm	89.0193	87.00	**107.01**
470mm	89.0194	98.00	**120.54**
565mm	86.0340	104.00	**127.92**

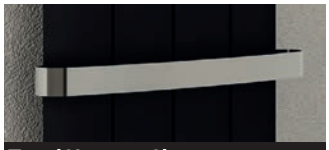

Towel Hanger - Chrome

Size	Code	€ Ex VAT	€ Inc VAT
280mm	86.0077	70.00	**86.10**
375mm	86.0078	83.00	**102.09**
470mm	86.0079	91.00	**111.93**
565mm	86.0341	96.00	**118.08**

TECHNICAL INFORMATION

Material: **Steel (Premium: Stainless Steel - Grade 304)**

Vertical Radiators:

1800mm height radiators comes with 3 pre-drilled towel hanger locations, with a maximum of 3 towel hangers - all widths; 280, 375, 470 and 565mm. 600mm height radiators comes with 1 pre-drilled towel hanger location, with a maximum of 1 towel hanger - 280mm width. The standard towel hangers are only compatible with the Vertical Radiators.

Can be fitted after installation only on high adjustment bracket fitting.

Horizontal Radiators:

Don't have holes for Standard Towel Hangers (except 470mm width). Standard Towel Hanger can not be fitted. The Peretti Standard Towel Hangers will add approx 8mm width on each side once fitted to the radiator.

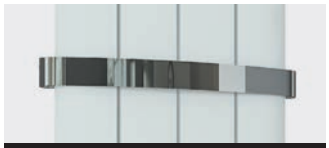

Towel Hanger - Mirror Polished Premium

Size	Code	€ Ex VAT	€ Inc VAT
280mm	86.0201	97.00	**119.31**
375mm	86.0202	107.00	**131.61**
470mm	86.0203	115.00	**141.45**
565mm	86.0342	124.00	**152.52**

PERETTI FLAT STYLE TOWEL HANGERS

SINGLE FLAT STYLE

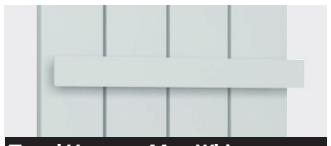

Towel Hanger - Matt White

Size	Code	€ Ex VAT	€ Inc VAT
280mm	89.0283	96.00	**118.08**
375mm	89.0284	105.00	**129.15**
470mm	89.0285	118.00	**145.14**
565mm	91.0163	126.00	**154.98**
660mm	89.0286	133.00	**163.59**
850mm	89.0287	149.00	**183.27**

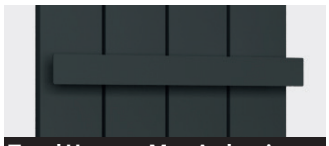

Towel Hanger - Matt Anthracite

Size	Code	€ Ex VAT	€ Inc VAT
280mm	89.0288	96.00	**118.08**
375mm	89.0289	105.00	**129.15**
470mm	89.0290	118.00	**145.14**
565mm	91.0164	126.00	**154.98**
660mm	89.0291	133.00	**163.59**
850mm	89.0292	149.00	**183.27**

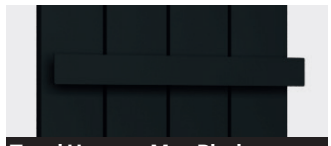

Towel Hanger - Matt Black

Size	Code	€ Ex VAT	€ Inc VAT
280mm	89.0293	96.00	**118.08**
375mm	89.0294	105.00	**129.15**
470mm	89.0295	118.00	**145.14**
565mm	91.0165	126.00	**154.98**
660mm	89.0296	133.00	**163.59**
850mm	89.0297	149.00	**183.27**

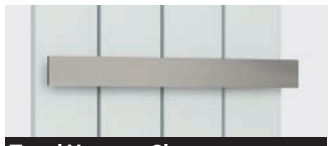

Towel Hanger - Chrome

Size	Code	€ Ex VAT	€ Inc VAT
280mm	91.0094	131.00	**161.13**
375mm	91.0095	133.00	**163.59**
470mm	91.0096	136.00	**167.28**
565mm	91.0166	138.00	**169.74**
660mm	91.0097	143.00	**175.89**
850mm	91.0098	153.00	**188.19**

DOUBLE FLAT STYLE

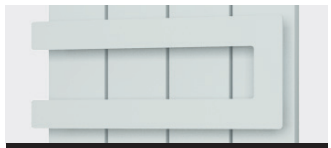

Towel Hanger - Matt White

Size	Code	€ Ex VAT	€ Inc VAT
280mm	89.0369	117.00	**143.91**
375mm	89.0370	122.00	**150.06**
470mm	89.0371	138.00	**169.74**
565mm	91.0167	152.00	**186.96**
660mm	89.0372	161.00	**198.03**
850mm	89.0373	180.00	**221.40**

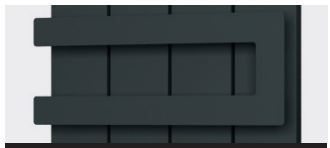

Towel Hanger - Matt Anthracite

Size	Code	€ Ex VAT	€ Inc VAT
280mm	89.0374	117.00	**143.91**
375mm	89.0375	122.00	**150.06**
470mm	89.0376	138.00	**169.74**
565mm	91.0168	152.00	**186.96**
660mm	89.0377	161.00	**198.03**
850mm	89.0378	180.00	**221.40**



Towel Hanger - Matt Black

Size	Code	€ Ex VAT	€ Inc VAT
280mm	89.0379	117.00	**143.91**
375mm	89.0380	122.00	**150.06**
470mm	89.0381	138.00	**169.74**
565mm	91.0169	152.00	**186.96**
660mm	89.0382	161.00	**198.03**
850mm	89.0383	180.00	**221.40**

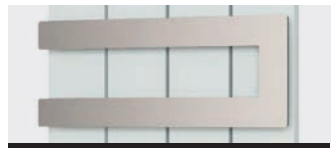

Towel Hanger - Chrome

Size	Code	€ Ex VAT	€ Inc VAT
280mm	91.0114	166.00	**204.18**
375mm	91.0115	173.00	**212.79**
470mm	91.0116	175.00	**215.25**
565mm	91.0170	184.00	**226.32**
660mm	91.0117	189.00	**232.47**
850mm	91.0118	205.00	**252.15**

TECHNICAL INFORMATION

Material: **Steel**

Vertical and Horizontal Radiators:

Flat & Double Flat Style Hangers are compatible with both Vertical and Horizontal radiators.(Depending on the radiators and hangers width)

Must be fitted before installation!

Hanger Fitting Widths
96/191/286/381/476/666mm



Hanger Fitting Widths
96/191/286/381/476/666mm



Aluminium Range

PERETTI FLAT TRIPLE TOWEL HANGER

Brushed Stainless Steel



Polished Stainless Steel



Flat Triple Hanger - Brushed Stainless Steel

Size	Code	€ Ex VAT	€ Inc VAT
280mm	101.0048	320.00	**393.60**
375mm	101.0049	348.00	**428.04**
470mm	101.0050	398.00	**489.54**
565mm	101.0064	447.00	**549.81**

Flat Triple Hanger - Polished Stainless Steel

Size	Code	€ Ex VAT	€ Inc VAT
280mm	101.0054	320.00	**393.60**
375mm	101.0055	348.00	**428.04**
470mm	101.0056	398.00	**489.54**
565mm	101.0065	447.00	**549.81**

PERETTI CURVED TRIPLE TOWEL HANGER

Brushed Stainless Steel



Polished Stainless Steel

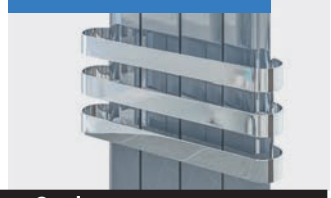

Curved Triple Hanger - Brushed Stainless Steel

Size	Code	€ Ex VAT	€ Inc VAT
280mm	101.0051	320.00	**393.60**
375mm	101.0052	348.00	**428.04**
470mm	101.0053	398.00	**489.54**
565mm	101.0066	447.00	**549.81**

Curved Triple Hanger - Polished Stainless Steel

Size	Code	€ Ex VAT	€ Inc VAT
280mm	101.0057	320.00	**393.60**
375mm	101.0058	348.00	**428.04**
470mm	101.0059	398.00	**489.54**
565mm	101.0067	447.00	**549.81**

TECHNICAL INFORMATION

Material: **Stainless Steel - Grade 304**

Vertical Radiators:

1800mm height radiators comes with 3 pre-drilled towel hanger locations. 600mm height radiators come with 1 pre-drilled towel hanger location. The flat triple & curved triple towel hangers are only compatible with the Vertical Radiators and can be fitted to the pre-drilled holes on 1800mm & 600mm height radiators. **Can be fitted after installation only on high adjustment bracket fitting.**

Horizontal Radiators:

The flat triple & curved triple towel hangers are not suitable for horizontal radiators.

PERETTI DESIGNER TOWEL HANGERS

Square Style

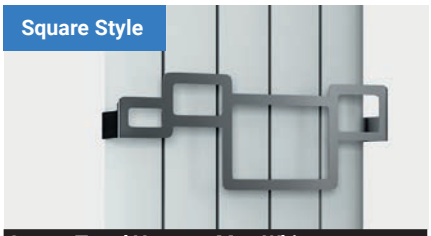

Square Towel Hanger - Matt White

Size	Code	€ Ex VAT	€ Inc VAT
375mm	101.0075	96.00	**118.08**
470mm	101.0076	105.00	**129.15**
565mm	101.0077	122.00	**150.06**

Square Towel Hanger - Matt Anthracite

Size	Code	€ Ex VAT	€ Inc VAT
375mm	101.0078	96.00	**118.08**
470mm	101.0079	105.00	**129.15**
565mm	101.0080	122.00	**150.06**

Square Towel Hanger - Matt Black

Size	Code	€ Ex VAT	€ Inc VAT
375mm	101.0081	96.00	**118.08**
470mm	101.0082	105.00	**129.15**
565mm	101.0083	122.00	**150.06**

Square Towel Hanger - Chrome

Size	Code	€ Ex VAT	€ Inc VAT
375mm	101.0084	111.00	**136.53**
470mm	101.0085	128.00	**157.44**
565mm	101.0086	149.00	**183.27**

Triangle Style

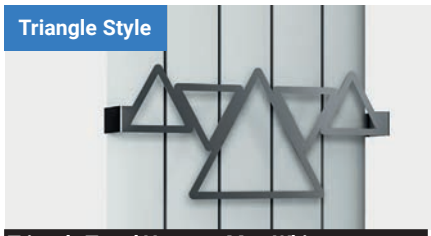

Triangle Towel Hanger - Matt White

Size	Code	€ Ex VAT	€ Inc VAT
375mm	101.0087	98.00	**120.54**
470mm	101.0088	111.00	**136.53**
565mm	101.0089	129.00	**158.67**

Triangle Towel Hanger - Matt Anthracite

Size	Code	€ Ex VAT	€ Inc VAT
375mm	101.0090	98.00	**120.54**
470mm	101.0091	111.00	**136.53**
565mm	101.0092	129.00	**158.67**

Triangle Towel Hanger - Matt Black

Size	Code	€ Ex VAT	€ Inc VAT
375mm	101.0093	98.00	**120.54**
470mm	101.0094	111.00	**136.53**
565mm	101.0095	129.00	**158.67**

Triangle Towel Hanger - Chrome

Size	Code	€ Ex VAT	€ Inc VAT
375mm	101.0096	112.00	**137.76**
470mm	101.0097	129.00	**158.67**
565mm	101.0098	153.00	**188.19**

Circle Style



Circle Towel Hanger - Matt White

Size	Code	€ Ex VAT	€ Inc VAT
375mm	101.0099	104.00	**127.92**
470mm	101.0100	114.00	**140.22**
565mm	101.0101	133.00	**163.59**

Circle Towel Hanger - Matt Anthracite

Size	Code	€ Ex VAT	€ Inc VAT
375mm	101.0102	104.00	**127.92**
470mm	101.0103	114.00	**140.22**
565mm	101.0104	133.00	**163.59**

Circle Towel Hanger - Matt Black

Size	Code	€ Ex VAT	€ Inc VAT
375mm	101.0105	104.00	**127.92**
470mm	101.0106	114.00	**140.22**
565mm	101.0107	133.00	**163.59**

Circle Towel Hanger - Chrome

Size	Code	€ Ex VAT	€ Inc VAT
375mm	101.0108	112.00	**137.76**
470mm	101.0109	131.00	**161.13**
565mm	101.0110	154.00	**189.42**

TECHNICAL INFORMATION

Material: **Steel**

Square, Triangle and Circle Towel Hangers are only compatible with vertical radiators and can be fitted to one of the three pre-drilled holes on the 1800mm height radiators. Square, Triangle and Circle Towel Hangers will add approx 8mm width on each side once fitted to the radiator. **Can be fitted after installation only on high adjustment bracket fitting.**

Aluminium Range

SANDHURST VERTICAL

Side or Bottom connection options



Pictured 86.0279 Matt Anthracite with 86.0331 x3 Towel Hangers (side connection valves shown)

An aluminium radiator with elliptical vertical panels that will take everyone's attention. Vertical model is available in 3 different colours, 3 width and 1 Height options. This radiator is capable of heating up very quickly, thanks to being constructed in aluminium.

Sandhurst Vertical Aluminium Radiators - Matt White

Size H x W	Watts	BTU	Element Output	Element Type	Code	€ Ex VAT	€ Inc VAT
1800 x 275mm	901	3074	450W	A, A+	86.0270	447.00	**549.81**
1800 x 415mm	1351	4611	750W	A, A+	86.0271	623.00	**766.29**
1800 x 485mm	1577	5380	900W	A, A+	86.0272	707.00	**869.61**

Sandhurst Vertical Aluminium Radiators - Matt Anthracite

Size H x W	Watts	BTU	Element Output	Element Type	Code	€ Ex VAT	€ Inc VAT
1800 x 275mm	901	3074	450W	A, A+	86.0278	447.00	**549.81**
1800 x 415mm	1351	4611	750W	A, A+	86.0279	623.00	**766.29**
1800 x 485mm	1577	5380	900W	A, A+	86.0280	707.00	**869.61**

Sandhurst Vertical Aluminium Radiators - Polished Aluminium

Size H x W	Watts	BTU	Element Output	Element Type	Code	€ Ex VAT	€ Inc VAT
1800 x 275mm	901	3074	450W	A, A+	86.0281	503.00	**618.69**
1800 x 415mm	1351	4611	750W	A, A+	86.0282	700.00	**861.00**
1800 x 485mm	1577	5380	900W	A, A+	86.0283	798.00	**981.54**

Prices include radiator and wall fixing sets, valves and accessories extra.

FEATURES

- Excellent heat conductivity and lightweight
- Only requires a low water volume
- Heats up very quickly
- Side or bottom connection options (only on vertical sizes)
- Radiators come with cover caps on top and bottom, same as radiator colour
- Tested to BS EN 442 standards
- 5 Year Manufacturer's Warranty*
- Can be single or dual fuel, or all electric

* With conditions

TECHNICAL INFORMATION

All measurements in Height by Width. Heat output based on ▲T60˚C. For matching valves see pages 731-737. Corrosion inhibitor must be added to the heating system and maintained. Flow diverter must only be fitted when radiator installed on central heating system. For indirect heating systems only. **Side connection:** Tappings are the width of the rail and approx 65mm off the wall. **Bottom connection:** Tappings are 65mm less than the width of the rail and approx 65mm off the wall.

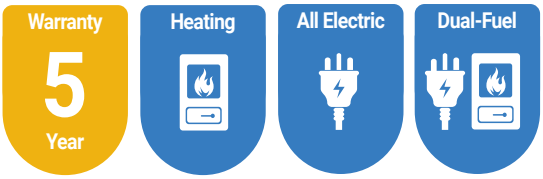

For element types see pages 718-729.

Element can be installed vertically on the right-hand side or left-hand side on the bottom header. Radiators that are electric only are restricted to the heat output of the elements. For dual fuel installations, element must be installed on flow side.





Sandhurst Cover Cap Sets - Chrome

Description	Code	€ Ex VAT	€ Inc VAT
Cover Cap Set 275mm	86.0302	38.00	**46.74**
Cover Cap Set 415mm	86.0303	51.00	**62.73**
Cover Cap Set 485mm	86.0304	54.00	**66.42**

Cover cap sets only include cover caps for the top of the radiator.

Aluminium Range



Pictured 86.0283 Polished Aluminium with 86.0332 x3 Towel Hangers (bottom connection valves shown)

SANDHURST VERTICAL

Matt White | Matt Anthracite | Polished

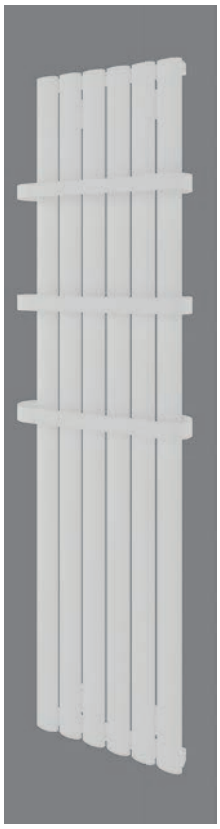





SANDHURST - STANDARD TOWEL HANGERS



Towel Hanger - Matt White

Size	Code	€ Ex VAT	€ Inc VAT
275mm	86.0324	66.00	**81.18**
415mm	86.0325	76.00	**93.48**
485mm	86.0326	86.00	**105.78**



Towel Hanger - Matt Anthracite

Size	Code	€ Ex VAT	€ Inc VAT
275mm	86.0327	66.00	**81.18**
415mm	86.0328	76.00	**93.48**
485mm	86.0329	86.00	**105.78**

TECHNICAL INFORMATION

Material: **Steel**

Vertical Radiators:

1800mm height radiators comes with 3 pre-drilled towel hanger locations, with a maximum of 3 towel hangers - all widths; 275, 415 and 485mm. The standard towel hangers are only compatible with the Vertical Radiators. The Sandhurst Standard Towel Hangers will add approx 42mm width on each side once fitted to the radiator.

Must be fitted before installation!



Towel Hanger - Chrome

Size	Code	€ Ex VAT	€ Inc VAT
275mm	86.0330	66.00	**81.18**
415mm	86.0331	76.00	**93.48**
485mm	86.0332	86.00	**105.78**

Technical Tables & Drawings
Page 790-791

Aluminium Range

SANDHURST HORIZONTAL



Pictured 86.0269 Matt White with 86.0308 Cover Caps

An aluminium radiator with elliptical vertical panels that will take everyone's attention. Horizontal model is available in 2 different colours, 5 width and 1 Height options. This radiator is capable of heating up very quickly, thanks to being constructed in aluminium.

TECHNICAL INFORMATION

All measurements in Height by Width. Heat output based on ▲T60˚C. For matching valves see pages 731-737. Corrosion inhibitor must be added to the heating system and maintained. Flow diverter must only be fitted when radiator installed on central heating system. For indirect heating systems only. Tappings are the width of the rail and approx. 65mm off the wall.

Radiator Valves
Page 731-737

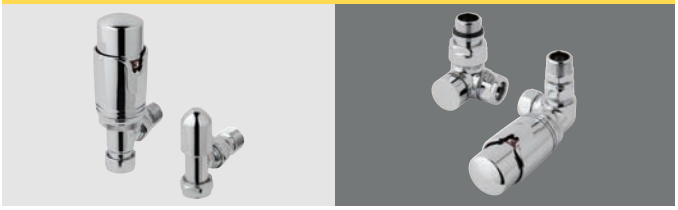

Aluminium Range

SANDHURST HORIZONTAL

Pictured 86.0276 Matt Anthracite



Sandhurst Horizontal Aluminium Radiators - Matt White

Size H x W	Watts	BTU	Element Output	Element Type	Code	€ Ex VAT	€ Inc VAT
600 x 485mm	526	1793	300W	A, A+	86.0265	362.00	**445.26**
600 x 625mm	676	2306	450W	A, A+	86.0266	434.00	**533.82**
600 x 835mm	901	3074	450W	A, A+	86.0267	546.00	**671.58**
600 x 1045mm	1126	3843	600W	A, A+	86.0268	657.00	**808.11**
600 x 1255mm	1351	4611	750W	A, A+	86.0269	773.00	**950.79**

Sandhurst Horizontal Aluminium Radiators - Matt Anthracite

Size H x W	Watts	BTU	Element Output	Element Type	Code	€ Ex VAT	€ Inc VAT
600 x 485mm	526	1793	300W	A, A+	86.0273	362.00	**445.26**
600 x 625mm	676	2306	450W	A, A+	86.0274	434.00	**533.82**
600 x 835mm	901	3074	450W	A, A+	86.0275	546.00	**671.58**
600 x 1045mm	1126	3843	600W	A, A+	86.0276	657.00	**808.11**
600 x 1255mm	1351	4611	750W	A, A+	86.0277	773.00	**950.79**

Prices include radiator and wall fixing sets, valves and accessories extra.

FEATURES

- Excellent heat conductivity and lightweight
- Only requires a low water volume
- Heats up very quickly
- Radiators come with cover caps on top and bottom, same as radiator colour
- Tested to BS EN 442 standards
- 5 Year Manufacturer's Warranty*
- Can be single or dual fuel, or all electric

* With conditions

Technical Tables & Drawings
Page 790-791

For element types see pages 718-729.

Element can only be installed horizontally on the bottom header. Radiators that are electric only are restricted to the heat output of the elements (Type C up to 900 watts).

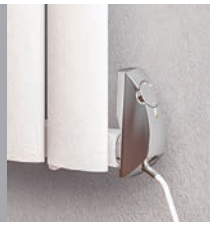

TOWEL HANGERS

Horizontal Radiators:

Horizontal radiators do not have holes for Standard Towel Hangers. Standard Towel Hangers can not be fitted.

Matt White

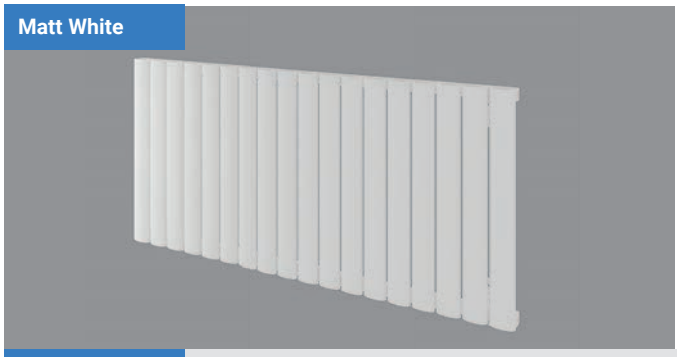

Matt Anthracite

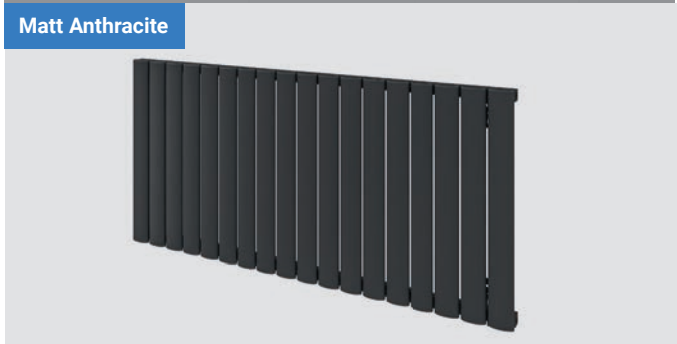

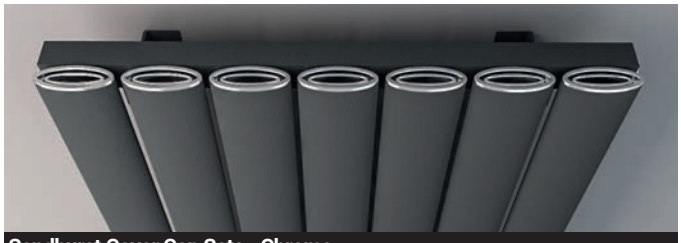

Sandhurst Cover Cap Sets - Chrome

Description	Code	€ Ex VAT	€ Inc VAT
Cover Cap Set 485mm	86.0304	54.00	**66.42**
Cover Cap Set 625mm	86.0305	65.00	**79.95**
Cover Cap Set 8535mm	86.0306	80.00	**98.40**
Cover Cap Set 1045mm	86.0307	91.00	**111.93**
Cover Cap Set 1255mm	86.0308	108.00	**132.84**

Cover cap sets only include cover caps for the top of the radiator.

Aluminium Range

BERKELEY HORIZONTAL

Matt White



Pictured 89.0712 Matt White

Matt Grey



Pictured 89.0722 Matt Grey

Matt Anthracite



Pictured 89.0732 Matt Anthracite

Aluminium Range

BERKELEY HORIZONTAL

Horizontally positioned sleek and futuristic panels combined to create the radiator that will create an elegant look in every room it will be installed. When you are bored with the standard, old fashioned single panel radiators, just replace with a brand new Berkeley aluminium radiator, the perfect alternative for single panel radiators.

FEATURES

- Perfect alternative for Single Panel (Type11) Radiators
- Only requires a low water volume
- Heats up very quickly
- Tested to BS EN 442 standards
- 5 Year Manufacturer's Warranty*
- Not suitable for elements

* With conditions

Technical Tables & Drawings
Page 790-791

Berkeley Aluminium Radiator - Matt White

Size H x W	Watts	BTU	Element Output	Element Type	Code	€ Ex VAT	€ Inc VAT
603 x 600mm	425	1451	N/A	N/A	89.0711	199.00	**244.77**
603 x 800mm	558	1904	N/A	N/A	89.0712	262.00	**322.26**
603 x 1000mm	690	2355	N/A	N/A	89.0713	329.00	**404.67**
603 x 1200mm	820	2798	N/A	N/A	89.0714	394.00	**484.62**
603 x 1400mm	949	3238	N/A	N/A	89.0715	458.00	**563.34**
603 x 1600mm	1077	3675	N/A	N/A	89.0716	521.00	**640.83**
603 x 1800mm	1204	4109	N/A	N/A	89.0717	588.00	**723.24**
603 x 2000mm	1330	4538	N/A	N/A	89.0718	653.00	**803.19**

Berkeley Aluminium Radiator - Matt Grey

Size H x W	Watts	BTU	Element Output	Element Type	Code	€ Ex VAT	€ Inc VAT
603 x 600mm	425	1451	N/A	N/A	89.0719	199.00	**244.77**
603 x 800mm	558	1904	N/A	N/A	89.0720	262.00	**322.26**
603 x 1000mm	690	2355	N/A	N/A	89.0721	329.00	**404.67**
603 x 1200mm	820	2798	N/A	N/A	89.0722	394.00	**484.62**
603 x 1400mm	949	3238	N/A	N/A	89.0723	458.00	**563.34**
603 x 1600mm	1077	3675	N/A	N/A	89.0724	521.00	**640.83**
603 x 1800mm	1204	4109	N/A	N/A	89.0725	588.00	**723.24**
603 x 2000mm	1330	4538	N/A	N/A	89.0726	653.00	**803.19**

Berkeley Aluminium Radiator - Matt Anthracite

Size H x W	Watts	BTU	Element Output	Element Type	Code	€ Ex VAT	€ Inc VAT
603 x 600mm	425	1451	N/A	N/A	89.0727	199.00	**244.77**
603 x 800mm	558	1904	N/A	N/A	89.0728	262.00	**322.26**
603 x 1000mm	690	2355	N/A	N/A	89.0729	329.00	**404.67**
603 x 1200mm	820	2798	N/A	N/A	89.0730	394.00	**484.62**
603 x 1400mm	949	3238	N/A	N/A	89.0731	458.00	**563.34**
603 x 1600mm	1077	3675	N/A	N/A	89.0732	521.00	**640.83**
603 x 1800mm	1204	4109	N/A	N/A	89.0733	588.00	**723.24**
603 x 2000mm	1330	4538	N/A	N/A	89.0734	653.00	**803.19**

TECHNICAL INFORMATION

All measurements in Height by Width. Heat output based on ▲T60˚C. For matching valves see pages 731-737. Corrosion inhibitor must be added to the heating system and maintained. For indirect heating systems only. Tappings are the width of the rail and approx. 50mm off the wall. Projection from wall 70mm.

Side View



Round Vent Caps
Page 741



Radiator Valves
Page 731-737



Matt White



Matt Grey



Matt Anthracite



Aluminium Range

TORDINO VERTICAL

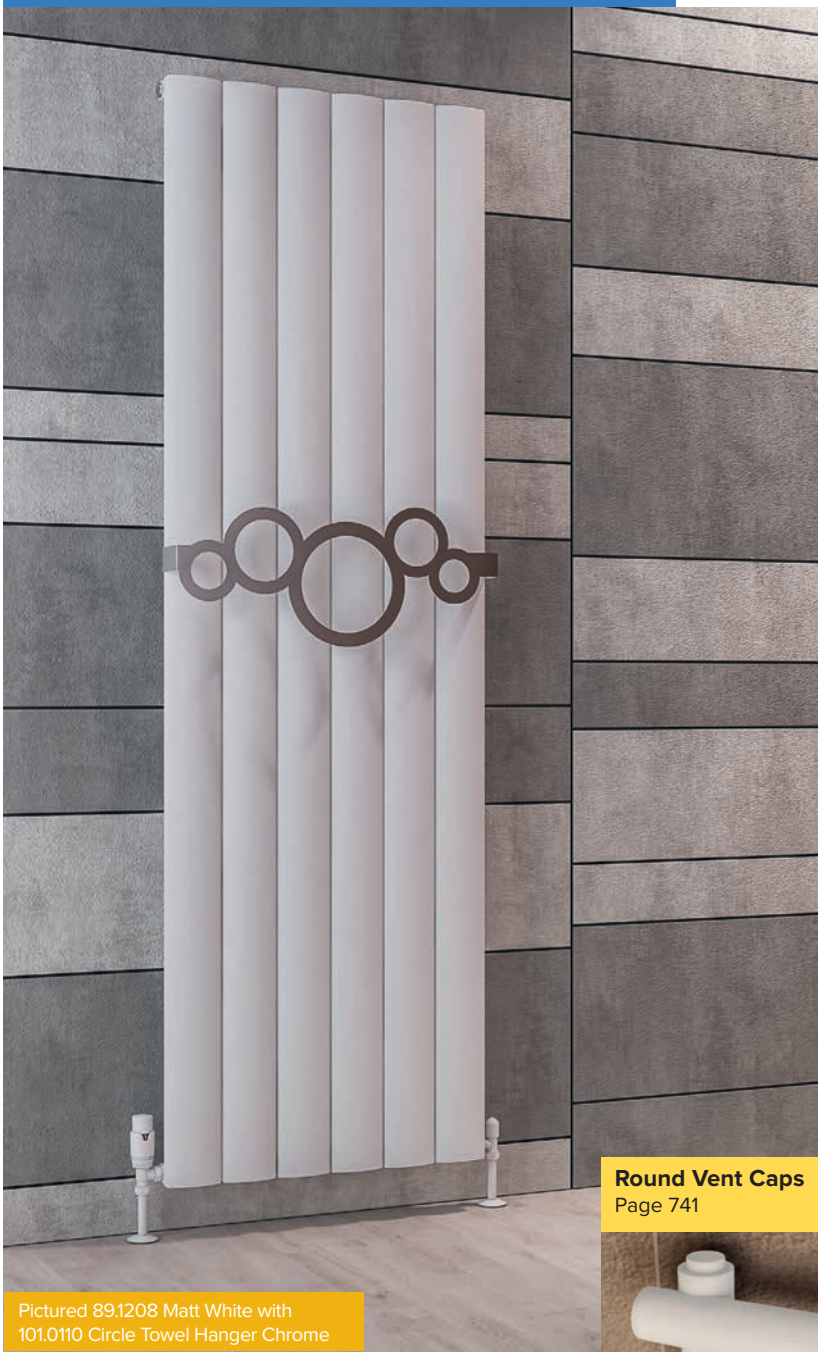

Pictured 89.1208 Matt White with 101.0110 Circle Towel Hanger Chrome

Round Vent Caps
Page 741

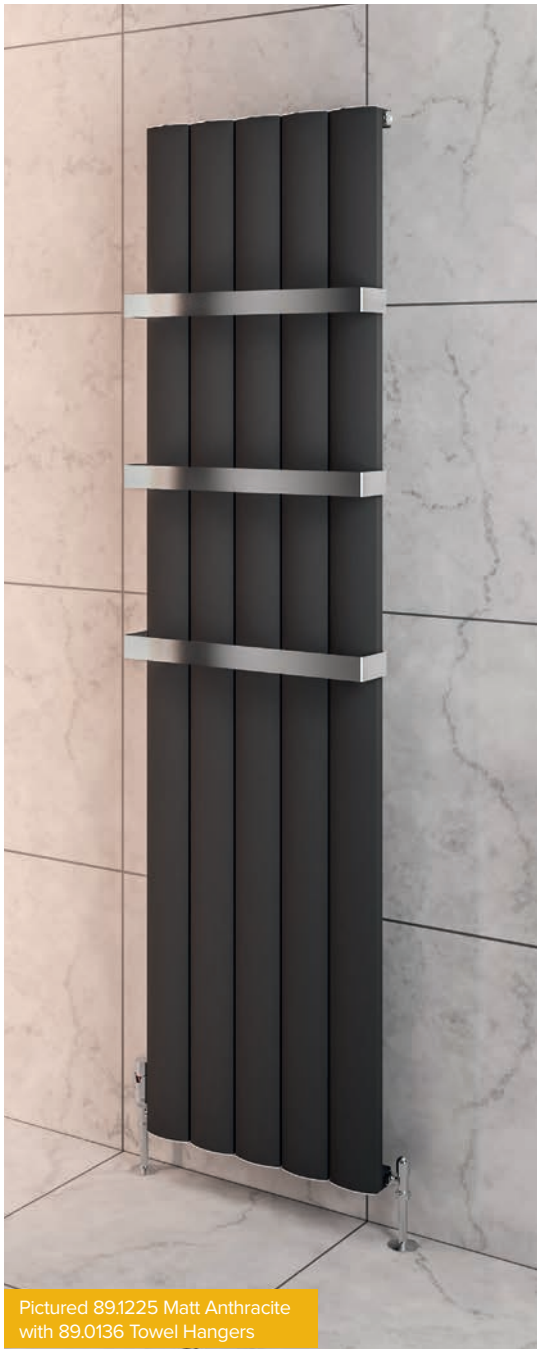

Pictured 89.1225 Matt Anthracite with 89.0136 Towel Hangers

An aluminium radiator with front facing curved panels that will add luxury to your desired room, with a choice of towel hangers and your bathroom can also be heated while drying your towels. Available in vertical and horizontal styles and 4 colours options.

Warranty 5 Year | Heating | All Electric | Dual-Fuel

TECHNICAL INFORMATION

All measurements in Height by Width. Heat output based on ▲T60˚C. For matching valves see pages 731-737. Corrosion inhibitor must be added to the heating system and maintained. Flow diverter must only be fitted when radiator installed on central heating system. For indirect heating systems only. Tappings are the width of the rail and 31 or 51mm off the wall. Projection from wall is 80 or 100mm.

FEATURES

- Excellent heat conductivity and lightweight
- Only requires a low water volume
- Heats up very quickly
- Radiators come with cover caps on top and bottom, same as radiator colour
- Tested to BS EN 442 standards
- 5 Year Manufacturer's Warranty*
- Can be single or dual fuel, or all electric

* With conditions

Technical Tables & Drawings
Page 790-791

Radiator Valves
Page 731-737





Aluminium Range

TORDINO VERTICAL

Matt White | Matt Grey | Matt Anthracite | Matt Black





Pictured 89.1215 Matt Grey with 89.0886L Towel Hanger

Tordino Vertical Aluminium Radiators - Matt White

Size H x W	Watts	BTU	Element Output	Element Type	Code	€ Ex VAT	€ Inc VAT
1800 x 280mm	864	2948	450W	A, A+, F, G	89.1205	419.00	**515.37**
1800 x 375mm	1149	3921	600W	A, A+, F, G	89.1206	537.00	**660.51**
1800 x 470mm	1432	4886	750W	A, A+, F, G	89.1207	656.00	**806.88**
1800 x 565mm	1713	5845	1000W	A, A+, F, G	89.1208	786.00	**966.78**

Tordino Vertical Aluminium Radiators - Matt Grey

Size H x W	Watts	BTU	Element Output	Element Type	Code	€ Ex VAT	€ Inc VAT
1800 x 280mm	864	2948	450W	A, A+, F, G	89.1214	419.00	**515.37**
1800 x 375mm	1149	3921	600W	A, A+, F, G	89.1215	537.00	**660.51**
1800 x 470mm	1432	4886	750W	A, A+, F, G	89.1216	656.00	**806.88**
1800 x 565mm	1713	5845	1000W	A, A+, F, G	89.1217	786.00	**966.78**

Tordino Vertical Aluminium Radiators - Matt Anthracite

Size H x W	Watts	BTU	Element Output	Element Type	Code	€ Ex VAT	€ Inc VAT
1800 x 280mm	864	2948	450W	A, A+, F, G	89.1223	419.00	**515.37**
1800 x 375mm	1149	3921	600W	A, A+, F, G	89.1224	537.00	**660.51**
1800 x 470mm	1432	4886	750W	A, A+, F, G	89.1225	656.00	**806.88**
1800 x 565mm	1713	5845	1000W	A, A+, F, G	89.1226	786.00	**966.78**

Tordino Vertical Aluminium Radiators - Matt Black

Size H x W	Watts	BTU	Element Output	Element Type	Code	€ Ex VAT	€ Inc VAT
1800 x 280mm	864	2948	450W	A, A+, F, G	89.1232	419.00	**515.37**
1800 x 375mm	1149	3921	600W	A, A+, F, G	89.1233	537.00	**660.51**
1800 x 470mm	1432	4886	750W	A, A+, F, G	89.1234	656.00	**806.88**
1800 x 565mm	1713	5845	1000W	A, A+, F, G	89.1235	786.00	**966.78**

Prices include radiator and wall fixing sets, valves and accessories extra.

For all Tordino Matt White, Matt Grey, Matt Anthacite, Matt Black, Chrome and Premium Towel Hangers, please refer to page 657.

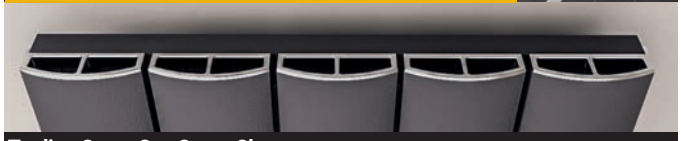

Tordino Cover Cap Sets - Chrome

Description	Code	€ Ex VAT	€ Inc VAT
Cover Cap Set 280mm	89.1236	19.00	**23.37**
Cover Cap Set 375mm	89.1237	21.00	**25.83**
Cover Cap Set 470mm	89.1238	24.00	**29.52**
Cover Cap Set 565mm	89.1239	30.00	**36.90**

Cover cap sets only include cover caps for the top of the radiator.

For element types see pages 718-729.

Element can only be installed vertically on the right-hand side on the bottom header. Radiators that are electric only are restricted to the heat output of the elements. Element size can be increased to full capacity of rail if using element type F or G. For dual fuel installations, element must be installed on flow side.



Multi-Purpose Towel Hangers
Page 740

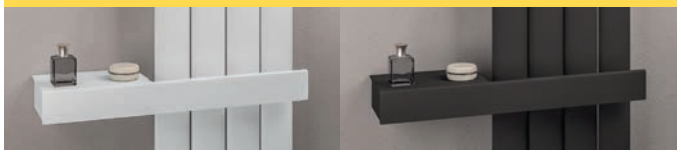

Aluminium Range

TORDINO HORIZONTAL


Pictured 89.1221 Matt Anthracite


Pictured 89.1212 Matt Grey

Tordino Horizontal Aluminium Radiators - Matt White

Size H x W	Watts	BTU	Element Output	Element Type	Code	€ Ex VAT	€ Inc VAT
600 x 470mm	520	1775	300W	A, A+, C, H	89.1200	343.00	**421.89**
600 x 660mm	724	2471	450W	A, A+, C, H	89.1201	451.00	**554.73**
600 x 850mm	927	3163	600W	A, A+, C, H	89.1202	565.00	**694.95**
600 x 1040mm	1129	3853	750W	A, A+, C, H	89.1203	670.00	**824.10**
600 x 1230mm	1329	4535	900W	A, A+, C, H	89.1204	789.00	**970.47**

Tordino Horizontal Aluminium Radiators - Matt Grey

Size H x W	Watts	BTU	Element Output	Element Type	Code	€ Ex VAT	€ Inc VAT
600 x 470mm	520	1775	300W	A, A+, C, H	89.1209	343.00	**421.89**
600 x 660mm	724	2471	450W	A, A+, C, H	89.1210	451.00	**554.73**
600 x 850mm	927	3163	600W	A, A+, C, H	89.1211	565.00	**694.95**
600 x 1040mm	1129	3853	750W	A, A+, C, H	89.1212	670.00	**824.10**
600 x 1230mm	1329	4535	900W	A, A+, C, H	89.1213	789.00	**970.47**

Tordino Horizontal Aluminium Radiators - Matt Anthracite

Size H x W	Watts	BTU	Element Output	Element Type	Code	€ Ex VAT	€ Inc VAT
600 x 470mm	520	1775	300W	A, A+, C, H	89.1218	343.00	**421.89**
600 x 660mm	724	2471	450W	A, A+, C, H	89.1219	451.00	**554.73**
600 x 850mm	927	3163	600W	A, A+, C, H	89.1220	565.00	**694.95**
600 x 1040mm	1129	3853	750W	A, A+, C, H	89.1221	670.00	**824.10**
600 x 1230mm	1329	4535	900W	A, A+, C, H	89.1222	789.00	**970.47**

Tordino Horizontal Aluminium Radiators - Matt Black

Size H x W	Watts	BTU	Element Output	Element Type	Code	€ Ex VAT	€ Inc VAT
600 x 470mm	520	1775	300W	A, A+, C, H	89.1227	343.00	**421.89**
600 x 660mm	724	2471	450W	A, A+, C, H	89.1228	451.00	**554.73**
600 x 850mm	927	3163	600W	A, A+, C, H	89.1229	565.00	**694.95**
600 x 1040mm	1129	3853	750W	A, A+, C, H	89.1230	670.00	**824.10**
600 x 1230mm	1329	4535	900W	A, A+, C, H	89.1231	789.00	**970.47**

Prices include radiator and wall fixing sets, valves and accessories extra.

For element types see pages 718-729.

Element can only be installed horizontally on the bottom header. Radiators that are electric only are restricted to the heat output of the elements. (Type C up to 900 Watts)



Warranty 5 Year | Heating | All Electric | Dual-Fuel

FEATURES

- Excellent heat conductivity and lightweight
- Only requires a low water volume
- Heats up very quickly
- Radiators come with cover caps on top and bottom, same as radiator colour
- Tested to BS EN 442 standards
- 5 Year Manufacturer's Warranty*
- Can be single or dual fuel, or all electric

* With conditions

Technical Tables & Drawings
Page 792-793

TECHNICAL INFORMATION

All measurements in Height by Width. Heat output based on ▲T60˚C. For matching valves see pages 731-737. Corrosion inhibitor must be added to the heating system and maintained. Flow diverter must only be fitted when radiator installed on central heating system. For indirect heating systems only. Tappings are the width of the rail and 31 or 51mm off the wall. Projection from wall is 80 or 100mm.



Tordino Cover Cap Sets - Chrome

Description	Code	€ Ex VAT	€ Inc VAT
Cover Cap Set 470mm	89.1238	24.00	**29.52**
Cover Cap Set 660mm	89.1240	37.00	**45.51**
Cover Cap Set 850mm	89.1241	45.00	**55.35**
Cover Cap Set 1040mm	89.1242	55.00	**67.65**
Cover Cap Set 1230mm	89.1243	62.00	**76.26**

Cover cap sets only include cover caps for the top of the radiator.

Round Vent Caps
Page 741



Aluminium Range

TORDINO STANDARD TOWEL HANGERS



Towel Hanger - Matt White

Size	Code	€ Ex VAT	€ Inc VAT
280mm	89.0177	83.00	**102.09**
375mm	89.0178	87.00	**107.01**
470mm	89.0179	98.00	**120.54**
565mm	86.0333	104.00	**127.92**



Towel Hanger - Matt Anthracite

Size	Code	€ Ex VAT	€ Inc VAT
280mm	89.0180	83.00	**102.09**
375mm	89.0181	87.00	**107.01**
470mm	89.0182	98.00	**120.54**
565mm	86.0334	104.00	**127.92**



Towel Hanger - Matt Black

Size	Code	€ Ex VAT	€ Inc VAT
280mm	89.0183	83.00	**102.09**
375mm	89.0184	87.00	**107.01**
470mm	89.0185	98.00	**120.54**
565mm	86.0335	104.00	**127.92**



Towel Hanger - Chrome

Size	Code	€ Ex VAT	€ Inc VAT
280mm	89.0134	70.00	**86.10**
375mm	89.0135	75.00	**92.25**
470mm	89.0136	86.00	**105.78**
565mm	86.0336	96.00	**118.08**

TECHNICAL INFORMATION

Material: Steel (Premium: Stainless Steel - Grade 304)

Vertical Radiators:

1800mm height radiators comes with 3 pre-drilled towel hanger locations, with a maximum of 3 towel hangers - all widths; 280, 375, 470 and 565mm. The standard towel hangers are only compatible with the Vertical Radiators.

Can be fitted after installation only on high adjustment bracket fitting.

Horizontal Radiators:

Don't have holes for Standard Towel Hangers. Standard Towel Hanger can not be fitted. The Tordino Standard Towel Hangers will add approx 8mm width on each side once fitted to the radiator.

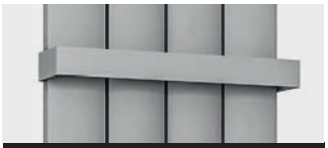

Towel Hanger - Matt Grey

Size	Code	€ Ex VAT	€ Inc VAT
280mm	89.1616	83.00	**102.09**
375mm	89.1617	87.00	**107.01**
470mm	89.1618	98.00	**120.54**
565mm	89.1619	104.00	**127.92**

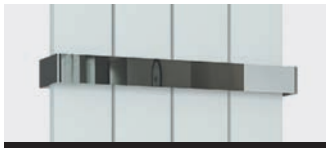

Towel Hanger - Mirror Polished Premium

Size	Code	€ Ex VAT	€ Inc VAT
280mm	86.0198	97.00	**119.31**
375mm	86.0199	107.00	**131.61**
470mm	86.0200	115.00	**141.45**
565mm	86.0337	124.00	**152.52**

TORDINO DESIGNER TOWEL HANGERS

Square Style

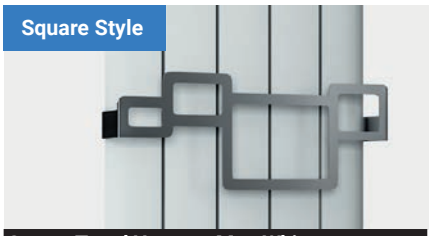

Square Towel Hanger - Matt White

Size	Code	€ Ex VAT	€ Inc VAT
375mm	101.0075	96.00	**118.08**
470mm	101.0076	105.00	**129.15**
565mm	101.0077	122.00	**150.06**

Square Towel Hanger - Matt Anthracite

Size	Code	€ Ex VAT	€ Inc VAT
375mm	101.0078	96.00	**118.08**
470mm	101.0079	105.00	**129.15**
565mm	101.0080	122.00	**150.06**

Square Towel Hanger - Matt Black

Size	Code	€ Ex VAT	€ Inc VAT
375mm	101.0081	96.00	**118.08**
470mm	101.0082	105.00	**129.15**
565mm	101.0083	122.00	**150.06**

Square Towel Hanger - Chrome

Size	Code	€ Ex VAT	€ Inc VAT
375mm	101.0084	111.00	**136.53**
470mm	101.0085	128.00	**157.44**
565mm	101.0086	149.00	**183.27**

Triangle Style



Triangle Towel Hanger - Matt White

Size	Code	€ Ex VAT	€ Inc VAT
375mm	101.0087	98.00	**120.54**
470mm	101.0088	111.00	**136.53**
565mm	101.0089	129.00	**158.67**

Triangle Towel Hanger - Matt Anthracite

Size	Code	€ Ex VAT	€ Inc VAT
375mm	101.0090	98.00	**120.54**
470mm	101.0091	111.00	**136.53**
565mm	101.0092	129.00	**158.67**

Triangle Towel Hanger - Matt Black

Size	Code	€ Ex VAT	€ Inc VAT
375mm	101.0093	98.00	**120.54**
470mm	101.0094	111.00	**136.53**
565mm	101.0095	129.00	**158.67**

Triangle Towel Hanger - Chrome

Size	Code	€ Ex VAT	€ Inc VAT
375mm	101.0096	112.00	**137.76**
470mm	101.0097	129.00	**158.67**
565mm	101.0098	153.00	**188.19**

Circle Style



Circle Towel Hanger - Matt White

Size	Code	€ Ex VAT	€ Inc VAT
375mm	101.0099	104.00	**127.92**
470mm	101.0100	114.00	**140.22**
565mm	101.0101	133.00	**163.59**

Circle Towel Hanger - Matt Anthracite

Size	Code	€ Ex VAT	€ Inc VAT
375mm	101.0102	104.00	**127.92**
470mm	101.0103	114.00	**140.22**
565mm	101.0104	133.00	**163.59**

Circle Towel Hanger - Matt Black

Size	Code	€ Ex VAT	€ Inc VAT
375mm	101.0105	104.00	**127.92**
470mm	101.0106	114.00	**140.22**
565mm	101.0107	133.00	**163.59**

Circle Towel Hanger - Chrome

Size	Code	€ Ex VAT	€ Inc VAT
375mm	101.0108	112.00	**137.76**
470mm	101.0109	131.00	**161.13**
565mm	101.0110	154.00	**189.42**

TECHNICAL INFORMATION

Material: **Steel**

Square, Triangle and Circle Towel Hangers are only compatible with vertical radiators and can be fitted to one of the three pre-drilled holes on the 1800mm height radiators. Square, Triangle and Circle Towel Hangers will add approx 8mm width on each side once fitted to the radiator. **Can be fitted after installation only on high adjustment bracket fitting.**

Aluminium Range

GUARDIA VERTICAL

High Output



Pictured 86.0032 Matt White with 86.0239 Towel Hanger

A versatile designer radiator which can be fitted to show the flat side or the curved profile of the panels, allowing the radiator to fit into your lifestyle and decor. Available in horizontal and vertical designs this radiator heats up quickly to warm your whole room.

Guardia Vertical Aluminium Radiators - Matt White

Size H x W	Watts	BTU	Element Output	Element Type	Code	€ Ex VAT	€ Inc VAT
1200 x 280mm	960	3276	N/A	N/A	86.0446	555.00	**682.65**
1200 x 375mm	1280	4367	N/A	N/A	86.0449	719.00	**884.37**
1200 x 470mm	1600	5459	N/A	N/A	86.0452	877.00	**1078.71**
1200 x 565mm	1920	6551	N/A	N/A	86.0455	1041.00	**1280.43**
1800 x 280mm	1368	4668	N/A	N/A	86.0029	699.00	**859.77**
1800 x 375mm	1824	6224	N/A	N/A	86.0032	905.00	**1113.15**
1800 x 470mm	2280	7780	N/A	N/A	86.0035	1109.00	**1364.07**
1800 x 565mm	2736	9335	N/A	N/A	86.0291	1350.00	**1660.50**

Guardia Vertical Aluminium Radiators - Matt Grey

Size H x W	Watts	BTU	Element Output	Element Type	Code	€ Ex VAT	€ Inc VAT
1200 x 280mm	960	3276	N/A	N/A	86.0482	555.00	**682.65**
1200 x 375mm	1280	4367	N/A	N/A	86.0483	719.00	**884.37**
1200 x 470mm	1600	5459	N/A	N/A	86.0484	877.00	**1078.71**
1200 x 565mm	1920	6551	N/A	N/A	86.0485	1041.00	**1280.43**
1800 x 280mm	1368	4668	N/A	N/A	86.0189	699.00	**859.77**
1800 x 375mm	1824	6224	N/A	N/A	86.0190	905.00	**1113.15**
1800 x 470mm	2280	7780	N/A	N/A	86.0191	1109.00	**1364.07**
1800 x 565mm	2736	9335	N/A	N/A	86.0292	1350.00	**1660.50**

Guardia Vertical Aluminium Radiators - Matt Anthracite

Size H x W	Watts	BTU	Element Output	Element Type	Code	€ Ex VAT	€ Inc VAT
1200 x 280mm	960	3276	N/A	N/A	86.0447	555.00	**682.65**
1200 x 375mm	1280	4367	N/A	N/A	86.0450	719.00	**884.37**
1200 x 470mm	1600	5459	N/A	N/A	86.0453	877.00	**1078.71**
1200 x 565mm	1920	6551	N/A	N/A	86.0456	1041.00	**1280.43**
1800 x 280mm	1368	4668	N/A	N/A	86.0030	699.00	**859.77**
1800 x 375mm	1824	6224	N/A	N/A	86.0033	905.00	**1113.15**
1800 x 470mm	2280	7780	N/A	N/A	86.0036	1109.00	**1364.07**
1800 x 565mm	2736	9335	N/A	N/A	86.0293	1350.00	**1660.50**

Guardia Vertical Aluminium Radiators - Matt Black

Size H x W	Watts	BTU	Element Output	Element Type	Code	€ Ex VAT	€ Inc VAT
1200 x 280mm	960	3276	N/A	N/A	86.0448	555.00	**682.65**
1200 x 375mm	1280	4367	N/A	N/A	86.0451	719.00	**884.37**
1200 x 470mm	1600	5459	N/A	N/A	86.0454	877.00	**1078.71**
1200 x 565mm	1920	6551	N/A	N/A	86.0457	1041.00	**1280.43**
1800 x 280mm	1368	4668	N/A	N/A	86.0031	699.00	**859.77**
1800 x 375mm	1824	6224	N/A	N/A	86.0034	905.00	**1113.15**
1800 x 470mm	2280	7780	N/A	N/A	86.0037	1109.00	**1364.07**
1800 x 565mm	2736	9335	N/A	N/A	86.0294	1350.00	**1660.50**

Warranty 5 Year

Heating

Technical Tables & Drawings
Page 792-793



Guardia Cover Cap Sets - Chrome

Description	Code	€ Ex VAT	€ Inc VAT
Cover Cap Set 280mm	86.0118	38.00	**46.74**
Cover Cap Set 375mm	86.0119	51.00	**62.73**
Cover Cap Set 470mm	86.0120	55.00	**67.65**
Cover Cap Set 565mm	86.0311	105.00	**129.15**

Cover cap sets only include cover caps for the top of the radiator.

Aluminium Range

GUARDIA VERTICAL

FEATURES
- Can be reversed when hanging on the wall
- Excellent heat conductivity and lightweight
- Only requires a low water volume
- Heats up very quickly
- Radiators come with cover caps on top and bottom, same as radiator colour
- Tested to BS EN 442 standards
- 5 Year Manufacturer's Warranty*
- Not suitable for elements

* With conditions

TECHNICAL INFORMATION

All measurements in Height by Width. Heat output based on ▲T60˚C. For matching valves see pages 731-737. Corrosion inhibitor must be added to the heating system and maintained. Flow diverter must only be fitted when radiator installed on central heating system. For indirect heating systems only. Tappings are the width of the rail and approx. 65mm off the wall.

Can be reversed when hanging on the wall. Either side can be used as front facing.



Matt White | Matt Grey | Matt Anthracite | Matt Black



GUARDIA - WALL MOUNTED TOWEL HANGERS



Towel Hanger - Matt White

Size	Code	€ Ex VAT	€ Inc VAT
280mm	86.0226	111.00	**136.53**
375mm	86.0227	122.00	**150.06**
470mm	86.0228	131.00	**161.13**
565mm	86.0343	145.00	**178.35**



Towel Hanger - Matt Grey

Size	Code	€ Ex VAT	€ Inc VAT
280mm	86.0229	111.00	**136.53**
375mm	86.0230	122.00	**150.06**
470mm	86.0231	131.00	**161.13**
565mm	86.0344	145.00	**178.35**

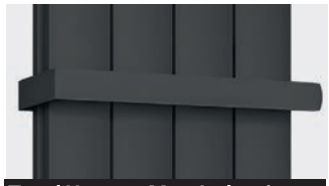

Towel Hanger - Matt Anthracite

Size	Code	€ Ex VAT	€ Inc VAT
280mm	86.0232	111.00	**136.53**
375mm	86.0233	122.00	**150.06**
470mm	86.0234	131.00	**161.13**
565mm	86.0345	145.00	**178.35**



Towel Hanger - Matt Black

Size	Code	€ Ex VAT	€ Inc VAT
280mm	86.0235	111.00	**136.53**
375mm	86.0236	122.00	**150.06**
470mm	86.0237	131.00	**161.13**
565mm	86.0346	145.00	**178.35**

TECHNICAL INFORMATION

Material: **Steel**

Vertical Radiators:
- Guardia Towel Hangers must be mounted on the wall. Can be fitted on both flat and curved type of installation.
- Guardia Towel Hangers can be mounted Left Hand or Right Hand of the radiator. Once the towel hanger is mounted on the wall, the radiator must be fitted from the side.
- Total length of each towel hanger is 30mm longer than the width of the radiator, making the radiator's width +30mm on the side they are mounted on. Towel hangers can mounted at any height vertically on the wall.

Must be fitted before radiator installation!

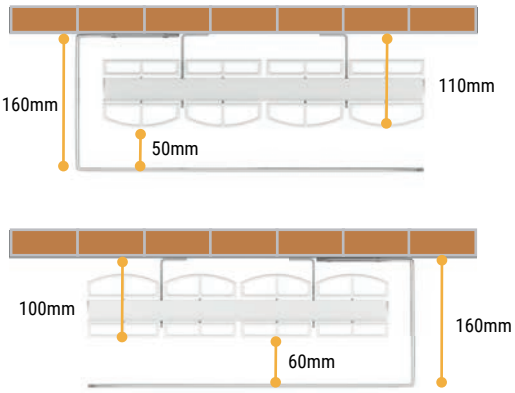

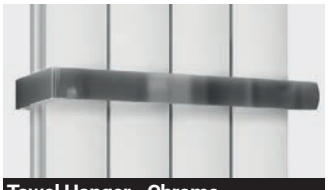

Towel Hanger - Chrome

Size	Code	€ Ex VAT	€ Inc VAT
280mm	86.0238	115.00	**141.45**
375mm	86.0239	128.00	**157.44**
470mm	86.0240	147.00	**180.81**
565mm	86.0347	157.00	**193.11**

Aluminium Range

GUARDIA HORIZONTAL

Warranty 5 Year | Heating | All Electric | Dual-Fuel



Curved Side

Pictured 86.0045 Matt Anthracite with Chrome Cover Caps 86.0122 (x2)



Flat Side

Pictured 86.0194 Matt Grey with Chrome Cover Caps 86.0122 (x2)



Guardia Cover Cap Sets - Chrome

Description	Code	€ Ex VAT	€ Inc VAT
Cover Cap Set 470mm	86.0120	55.00	**67.65**
Cover Cap Set 660mm	86.0121	73.00	**89.79**
Cover Cap Set 850mm	86.0122	93.00	**114.39**
Cover Cap Set 1040mm	86.0123	111.00	**136.53**
Cover Cap Set 1230mm	86.0124	128.00	**157.44**
Cover Cap Set 1420mm	86.0175	139.00	**170.97**

Cover cap sets only include cover caps for the top of the radiator.

For element types see pages 718-729.

Element can only be installed horizontally on the bottom header. When ordering fluid filled rails with elements, please specify the front facing side. The element will be fitted on the right hand side as standard.

Radiators that are electric only are restricted to the heat output of the elements (Type C up to 900 watts).



Curved Side



Flat Side

Aluminium Range

GUARDIA HORIZONTAL

A versatile designer radiator which can be fitted to show the flat panel side or the curved style of the panels, allowing the radiator to fit into your lifestyle and decor. Available in horizontal and vertical designs this radiator heats up quickly to warm your whole room.

Guardia Horizontal Aluminium Radiators - Matt White

Size H x W	Watts	BTU	Element Output	Element Type	Code	€ Ex VAT	€ Inc VAT
600 x 470mm	800	2730	450W	A, A+, C, H	86.0038	497.00	**611.31**
600 x 660mm	1120	3822	600W	A, A+, C, H	86.0041	663.00	**815.49**
600 x 850mm	1440	4913	750W	A, A+, C, H	86.0044	831.00	**1022.13**
600 x 1040mm	1790	6005	1000W	A, A+, H	86.0047	996.00	**1225.08**
600 x 1230mm	2080	7097	1200W	A, A+	86.0050	1164.00	**1431.72**
600 x 1420mm	2400	8190	1200W	A, A+	86.0170	1360.00	**1672.80**

Guardia Horizontal Aluminium Radiators - Matt Grey

Size H x W	Watts	BTU	Element Output	Element Type	Code	€ Ex VAT	€ Inc VAT
600 x 470mm	800	2730	450W	A, A+, C, H	86.0192	497.00	**611.31**
600 x 660mm	1120	3822	600W	A, A+, C, H	86.0193	663.00	**815.49**
600 x 850mm	1440	4913	750W	A, A+, C, H	86.0194	831.00	**1022.13**
600 x 1040mm	1790	6005	1000W	A, A+, H	86.0195	996.00	**1225.08**
600 x 1230mm	2080	7097	1200W	A, A+	86.0196	1164.00	**1431.72**
600 x 1420mm	2400	8190	1200W	A, A+	86.0197	1360.00	**1672.80**

Guardia Horizontal Aluminium Radiators - Matt Anthracite

Size H x W	Watts	BTU	Element Output	Element Type	Code	€ Ex VAT	€ Inc VAT
600 x 470mm	800	2730	450W	A, A+, C, H	86.0039	497.00	**611.31**
600 x 660mm	1120	3822	600W	A, A+, C, H	86.0042	663.00	**815.49**
600 x 850mm	1440	4913	750W	A, A+, C, H	86.0045	831.00	**1022.13**
600 x 1040mm	1790	6005	1000W	A, A+, H	86.0048	996.00	**1225.08**
600 x 1230mm	2080	7097	1200W	A, A+	86.0051	1164.00	**1431.72**
600 x 1420mm	2400	8190	1200W	A, A+	86.0171	1360.00	**1672.80**

Guardia Horizontal Aluminium Radiators - Matt Black

Size H x W	Watts	BTU	Element Output	Element Type	Code	€ Ex VAT	€ Inc VAT
600 x 470mm	800	2730	450W	A, A+, C, H	86.0040	497.00	**611.31**
600 x 660mm	1120	3822	600W	A, A+, C, H	86.0043	663.00	**815.49**
600 x 850mm	1440	4913	750W	A, A+, C, H	86.0046	831.00	**1022.13**
600 x 1040mm	1790	6005	1000W	A, A+, H	86.0049	996.00	**1225.08**
600 x 1230mm	2080	7097	1200W	A, A+	86.0052	1164.00	**1431.72**
600 x 1420mm	2400	8190	1200W	A, A+	86.0172	1360.00	**1672.80**

FEATURES

- Can be reversed when hanging on the wall
- Excellent heat conductivity and lightweight
- Only requires a low water volume
- Heats up very quickly
- Radiators come with cover caps on top and bottom, same as radiator colour
- Tested to BS EN 442 standards
- 5 Year Manufacturer's Warranty*
- Not suitable for elements

* With conditions

Technical Tables & Drawings
Page 792-793

TECHNICAL INFORMATION

All measurements in Height by Width. Heat output based on ▲T60˚C. For matching valves see pages 731-737. Corrosion inhibitor must be added to the heating system and maintained. Flow diverter must only be fitted when radiator installed on central heating system. For indirect heating systems only. Tappings are the width of the rail and approx. 65mm off the wall.

Can be reversed when hanging on the wall. Either side can be used as front facing.

Flat Side >>



Curved Side >>



Matt White

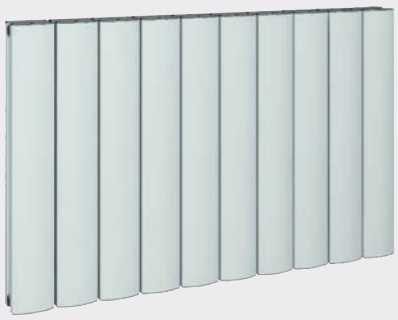

Matt Grey

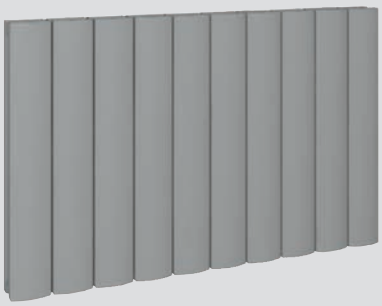

Matt Anthracite

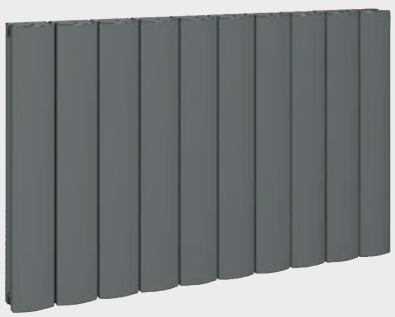

Matt Black



Radiator Valves
Page 731-737





Aluminium Range

HADLEIGH VERTICAL



Pictured 86.0247 Matt White with 86.0322 Towel Hanger

A versatile aluminium radiator with double profile construction panels that allows the radiator to produce high heat outputs. This radiator will fit into your lifestyle. Vertical version is available in 3 colours, 2 heights and 4 different widths.

Hadleigh Vertical Aluminium Radiators - Matt White

Size H x W	Watts	BTU	Element Output	Element Type	Code	€ Ex VAT	€ Inc VAT
1200 x 275mm	779	2658	N/A	N/A	86.0461	528.00	**649.44**
1200 x 415mm	1169	3987	N/A	N/A	86.0464	752.00	**924.96**
1200 x 485mm	1363	4652	N/A	N/A	86.0467	866.00	**1065.18**
1200 x 555mm	1558	5316	N/A	N/A	86.0470	978.00	**1202.94**
1800 x 275mm	1003	3422	N/A	N/A	86.0246	625.00	**768.75**
1800 x 415mm	1504	5132	N/A	N/A	86.0247	888.00	**1092.24**
1800 x 485mm	1755	5988	N/A	N/A	86.0248	1021.00	**1255.83**
1800 x 555mm	2006	6843	N/A	N/A	86.0458	1245.00	**1531.35**

Hadleigh Vertical Aluminium Radiators - Matt Anthracite

Size H x W	Watts	BTU	Element Output	Element Type	Code	€ Ex VAT	€ Inc VAT
1200 x 275mm	779	2658	N/A	N/A	86.0462	528.00	**649.44**
1200 x 415mm	1169	3987	N/A	N/A	86.0465	752.00	**924.96**
1200 x 485mm	1363	4652	N/A	N/A	86.0468	866.00	**1065.18**
1200 x 555mm	1558	5316	N/A	N/A	86.0471	978.00	**1202.94**
1800 x 275mm	1003	3422	N/A	N/A	86.0254	625.00	**768.75**
1800 x 415mm	1504	5132	N/A	N/A	86.0255	888.00	**1092.24**
1800 x 485mm	1755	5988	N/A	N/A	86.0256	1021.00	**1255.83**
1800 x 555mm	2006	6843	N/A	N/A	86.0459	1245.00	**1531.35**

Hadleigh Vertical Aluminium Radiators - Matt Black

Size H x W	Watts	BTU	Element Output	Element Type	Code	€ Ex VAT	€ Inc VAT
1200 x 275mm	779	2658	N/A	N/A	86.0463	528.00	**649.44**
1200 x 415mm	1169	3987	N/A	N/A	86.0466	752.00	**924.96**
1200 x 485mm	1363	4652	N/A	N/A	86.0469	866.00	**1065.18**
1200 x 555mm	1558	5316	N/A	N/A	86.0472	978.00	**1202.94**
1800 x 275mm	1003	3422	N/A	N/A	86.0262	625.00	**768.75**
1800 x 415mm	1504	5132	N/A	N/A	86.0263	888.00	**1092.24**
1800 x 485mm	1755	5988	N/A	N/A	86.0264	1021.00	**1255.83**
1800 x 555mm	2006	6843	N/A	N/A	86.0460	1245.00	**1531.35**

FEATURES

- Special double profile construction for high heat output
- Excellent heat conductivity and lightweight
- Only requires a low water volume
- Heats up very quickly
- Radiators come with cover caps on top and bottom, same as radiator colour
- Tested to BS EN 442 standards
- 5 Year Manufacturer's Warranty*
- Not suitable for elements

* With conditions

Technical Tables & Drawings
Page 792-793

TECHNICAL INFORMATION

All measurements in Height by Width. Heat output based on ▲T60˚C. For matching valves see pages 731-737. Corrosion inhibitor must be added to the heating system and maintained. Flow diverter must only be fitted when radiator installed on central heating system. For indirect heating systems only. Tappings are the width of the rail and approx. 65mm off the wall.



Hadleigh Cover Cap Sets - Chrome

Description	Code	€ Ex VAT	€ Inc VAT
Cover Cap Set 275mm	86.0295	56.00	**68.88**
Cover Cap Set 415mm	86.0296	80.00	**98.40**
Cover Cap Set 485mm	86.0297	89.00	**109.47**
Cover Cap Set 555mm	86.0488	105.00	**129.15**

Cover cap sets only include cover caps for the top of the radiator.

Aluminium Range

HADLEIGH VERTICAL


Pictured 86.0468 Matt Anthracite

Matt White

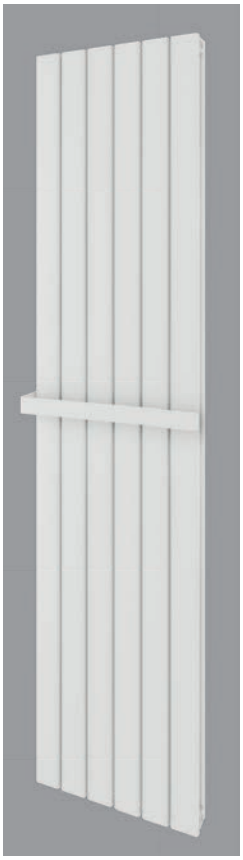

Matt Anthracite



Matt Black



HADLEIGH - WALL MOUNTED TOWEL HANGERS

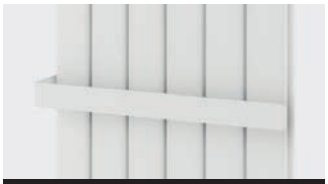

Towel Hanger - Matt White

Size	Code	€ Ex VAT	€ Inc VAT
275mm	86.0312	108.00	**132.84**
415mm	86.0313	119.00	**146.37**
485mm	86.0314	131.00	**161.13**
555mm	86.0490	150.00	**184.50**

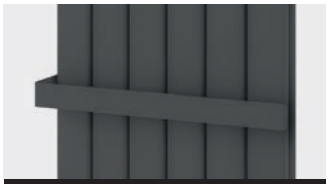

Towel Hanger - Matt Anthracite

Size	Code	€ Ex VAT	€ Inc VAT
275mm	86.0315	108.00	**132.84**
415mm	86.0316	119.00	**146.37**
485mm	86.0317	131.00	**161.13**
555mm	86.0491	150.00	**184.50**

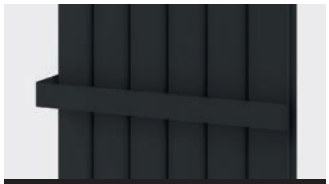

Towel Hanger - Matt Black

Size	Code	€ Ex VAT	€ Inc VAT
275mm	86.0318	108.00	**132.84**
415mm	86.0319	119.00	**146.37**
485mm	86.0320	131.00	**161.13**
555mm	86.0492	150.00	**184.50**



Towel Hanger - Chrome

Size	Code	€ Ex VAT	€ Inc VAT
275mm	86.0321	115.00	**141.45**
415mm	86.0322	126.00	**154.98**
485mm	86.0323	146.00	**179.58**
555mm	86.0493	167.00	**205.41**

TECHNICAL INFORMATION

Material: **Steel**

Vertical Radiators:

- Hadleigh Towel Hangers must be mounted on the wall.
- Hadleigh Towel Hangers can be mounted Left Hand or Right Hand of the radiator. Once the towel hanger is mounted on the wall, the radiator must be fitted from the side.
- Total length of each towel hanger is 30mm longer than the width of the radiator, making the radiator's width +30mm on the side they are mounted on. Towel hangers can mounted at any height vertically on the wall.

Must be fitted before radiator installation!

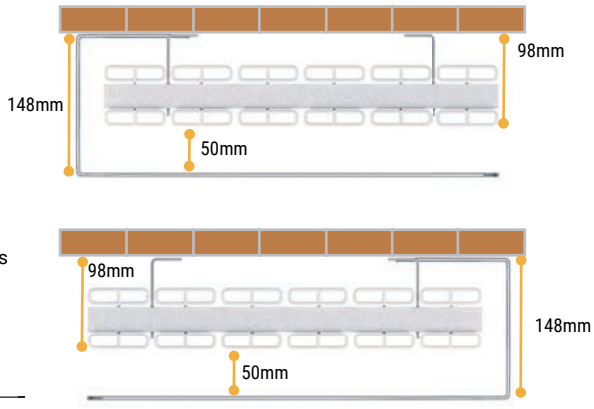

Radiator Valves
Page 731-737



Aluminium Range

HADLEIGH HORIZONTAL

Warranty 5 Year | Heating | All Electric | Dual-Fuel



Pictured 86.0243 Matt White



Pictured 86.0252 Matt Anthracite with 86.0300 x2 Cover Caps Chrome

Aluminium Range

HADLEIGH HORIZONTAL

A versatile aluminium radiator with double profile construction panels that allows the radiator to produce high heat outputs. This radiator will fit into your lifestyle. Horizontal version is available in 3 colours, 1 height and 6 different widths.

Hadleigh Horizontal Aluminium Radiators - Matt White

Size H x W	Watts	BTU	Element Output	Element Type	Code	€ Ex VAT	€ Inc VAT
600 x 485mm	821	2801	450W	A, A+, C, H	86.0241	461.00	**567.03**
600 x 625mm	1055	3601	600W	A, A+, C, H	86.0242	567.00	**697.41**
600 x 835mm	1407	4802	750W	A, A+, C, H	86.0243	724.00	**890.52**
600 x 1045mm	1759	6002	1000W	A, A+, C, H	86.0244	884.00	**1087.32**
600 x 1255mm	2111	7202	1200W	A, A+, C, H	86.0245	1042.00	**1281.66**
600 x 1395mm	2345	8003	1200W	A, A+, C, H	86.0473	1252.00	**1539.96**

Hadleigh Horizontal Aluminium Radiators - Matt Anthracite

Size H x W	Watts	BTU	Element Output	Element Type	Code	€ Ex VAT	€ Inc VAT
600 x 485mm	821	2801	450W	A, A+, C, H	86.0249	461.00	**567.03**
600 x 625mm	1055	3601	450W	A, A+, C, H	86.0250	567.00	**697.41**
600 x 835mm	1407	4802	750W	A, A+, C, H	86.0251	724.00	**890.52**
600 x 1045mm	1759	6002	900W	A, A+, C, H	86.0252	884.00	**1087.32**
600 x 1255mm	2111	7202	1200W	A, A+, C, H	86.0253	1042.00	**1281.66**
600 x 1395mm	2345	8003	1200W	A, A+, C, H	86.0474	1252.00	**1539.96**

Hadleigh Horizontal Aluminium Radiators - Matt Black

Size H x W	Watts	BTU	Element Output	Element Type	Code	€ Ex VAT	€ Inc VAT
600 x 485mm	821	2801	450W	A, A+, C, H	86.0257	461.00	**567.03**
600 x 625mm	1055	3601	450W	A, A+, C, H	86.0258	567.00	**697.41**
600 x 835mm	1407	4802	750W	A, A+, C, H	86.0259	724.00	**890.52**
600 x 1045mm	1759	6002	900W	A, A+, C, H	86.0260	884.00	**1087.32**
600 x 1255mm	2111	7202	1200W	A, A+, C, H	86.0261	1042.00	**1281.66**
600 x 1395mm	2345	8003	1200W	A, A+, C, H	86.0475	1252.00	**1539.96**

FEATURES

- Special double profile construction for high heat output
- Excellent heat conductivity and lightweight
- Only requires a low water volume
- Heats up very quickly
- Radiators come with cover caps on top and bottom, same as radiator colour
- Tested to BS EN 442 standards
- 5 Year Manufacturer's Warranty*
- Not suitable for elements

* With conditions

Technical Tables & Drawings
Page 794-795

TECHNICAL INFORMATION

All measurements in Height by Width. Heat output based on ▲T60˚C. For matching valves see pages 731-737. Corrosion inhibitor must be added to the heating system and maintained. Flow diverter must only be fitted when radiator installed on central heating system. For indirect heating systems only. Tappings are the width of the rail and approx. 65mm off the wall.

Radiator Valves
Page 731-737





For element types see pages 718-729.

Element can only be installed horizontally on the bottom header.

Radiators that are electric only are restricted to the heat output of the elements (Type C up to 900 watts).



Matt White

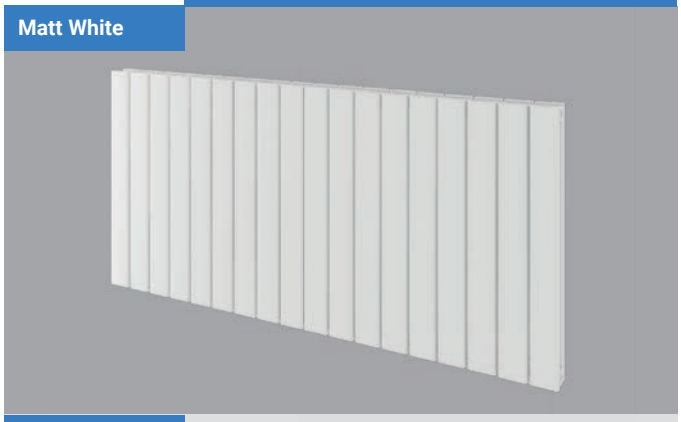

Matt Anthracite

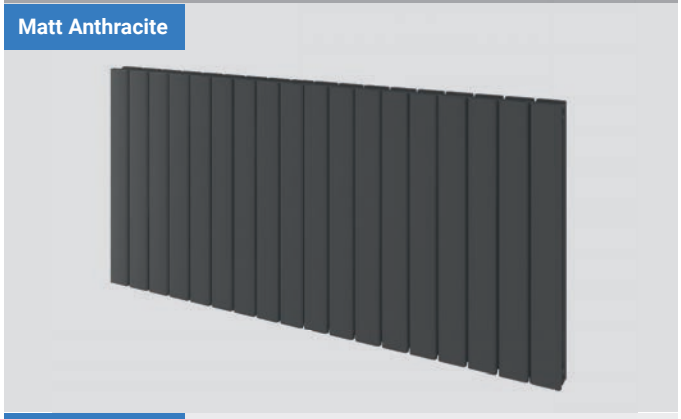

Matt Black

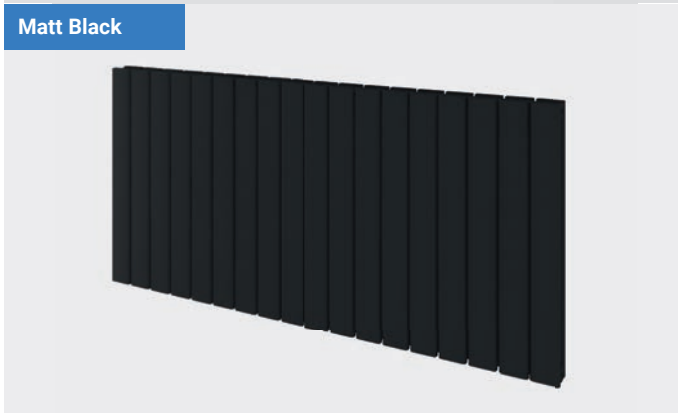



Hadleigh Cover Caps - Chrome

Description	Code	€ Ex VAT	€ Inc VAT
Cover Cap Set 485mm	86.0297	89.00	**109.47**
Cover Cap Set 625mm	86.0298	108.00	**132.84**
Cover Cap Set 835mm	86.0299	136.00	**167.28**
Cover Cap Set 1045mm	86.0300	166.00	**204.18**
Cover Cap Set 1255mm	86.0301	198.00	**243.54**
Cover Cap Set 1395mm	86.0486	231.00	**284.13**

Cover cap sets only include cover caps for the top of the radiator.

Aluminium Range

VESIMA VERTICAL



Pictured 86.0085 Matt Black

Multi-Purpose Towel Hangers
Page 740

A sleek elegant radiator with clean lines which will provide a stylish focus to any room. Available in three colours as well as horizontal and vertical designs. Additional towel hangers available with the vertical design to allow versatility.

FEATURES
- Excellent heat conductivity and lightweight
- Only requires a low water volume
- Heats up very quickly
- Radiators come with cover caps on top and bottom, same as radiator colour
- Tested to BS EN 442 standards
- 5 Year Manufacturer's Warranty*
- Can be single or dual fuel, or all electric

* With conditions

Technical Tables & Drawings
Page 794-795

Warranty 5 Year | Heating | All Electric | Dual-Fuel

Vesima Vertical Aluminium Radiators - Matt White

Size H x W	Watts	BTU	Element Output	Element Type	Code	€ Ex VAT	€ Inc VAT
1800 x 303mm	1068	3644	600W	A	86.0080	545.00	**670.35**
1800 x 403mm	1424	4859	900W	A	86.0083	685.00	**842.55**
1800 x 503mm	1780	6074	900W	A	86.0086	829.00	**1019.67**
1800 x 603mm	2134	7282	900W	A	86.0476	1053.00	**1295.19**

Vesima Vertical Aluminium Radiators - Matt Anthracite

Size H x W	Watts	BTU	Element Output	Element Type	Code	€ Ex VAT	€ Inc VAT
1800 x 303mm	1068	3644	600W	A	86.0081	545.00	**670.35**
1800 x 403mm	1424	4859	900W	A	86.0084	685.00	**842.55**
1800 x 503mm	1780	6074	900W	A	86.0087	801.00	**985.23**
1800 x 603mm	2134	7282	900W	A	86.0477	1053.00	**1295.19**

Vesima Vertical Aluminium Radiators - Matt Black

Size H x W	Watts	BTU	Element Output	Element Type	Code	€ Ex VAT	€ Inc VAT
1800 x 303mm	1068	3644	600W	A	86.0082	545.00	**670.35**
1800 x 403mm	1424	4859	900W	A	86.0085	685.00	**842.55**
1800 x 503mm	1780	6074	900W	A	86.0088	829.00	**1019.67**
1800 x 603mm	2134	7282	900W	A	86.0478	1053.00	**1295.19**

Prices include radiator and wall fixing sets, valves and accessories extra.

Aluminium Range

Matt White	Matt Anthracite	Matt Black



VESIMA STANDARD TOWEL HANGERS

Vesima Standard Towel Hangers - Premium Stainless Steel Mirror Polished

Description	Colour	Code	€ Ex VAT	€ Inc VAT
Towel Hanger 303mm	Premium Mirror Polished	86.0204	103.00	**126.69**
Towel Hanger 403mm	Premium Mirror Polished	86.0205	108.00	**132.84**
Towel Hanger 503mm	Premium Mirror Polished	86.0206	119.00	**146.37**
Towel Hanger 603mm	Premium Mirror Polished	86.0489	152.00	**186.96**

Vesima Standard Towel Hangers - Matt White

Description	Colour	Code	€ Ex VAT	€ Inc VAT
Towel Hanger 303mm	Matt White	89.0195	86.00	**105.78**
Towel Hanger 403mm	Matt White	89.0196	93.00	**114.39**
Towel Hanger 503mm	Matt White	89.0197	105.00	**129.15**
Towel Hanger 603mm	Matt White	89.1400	114.00	**140.22**

Vesima Standard Towel Hangers - Matt Anthracite

Description	Colour	Code	€ Ex VAT	€ Inc VAT
Towel Hanger 303mm	Matt Anthracite	89.0198	86.00	**105.78**
Towel Hanger 403mm	Matt Anthracite	89.0199	93.00	**114.39**
Towel Hanger 503mm	Matt Anthracite	89.0200	105.00	**129.15**
Towel Hanger 603mm	Matt Anthracite	89.1401	114.00	**140.22**

Vesima Standard Towel Hangers - Matt Black

Description	Colour	Code	€ Ex VAT	€ Inc VAT
Towel Hanger 303mm	Matt Black	89.0201	86.00	**105.78**
Towel Hanger 403mm	Matt Black	89.0202	93.00	**114.39**
Towel Hanger 503mm	Matt Black	89.0203	105.00	**129.15**
Towel Hanger 603mm	Matt Black	89.1402	114.00	**140.22**

Vesima Standard Towel Hangers - Chrome

Description	Colour	Code	€ Ex VAT	€ Inc VAT
Towel Hanger 303mm	Chrome	86.0104	73.00	**89.79**
Towel Hanger 403mm	Chrome	86.0105	86.00	**105.78**
Towel Hanger 503mm	Chrome	86.0106	93.00	**114.39**
Towel Hanger 603mm	Chrome	89.1403	103.00	**126.69**

VESIMA VERTICAL



Pictured 86.0083 Matt White with 86.0105 Towel Hangers x3 & 86.0133 Cover Caps x2

TECHNICAL INFORMATION

All measurements in Height by Width. Heat output based on ▲T60˚C. For matching valves see pages 731-737. Corrosion inhibitor must be added to the heating system and maintained. Flow diverter must only be fitted when radiator installed on central heating system. For indirect heating systems only. Tappings are the width of the rail and 60 or 80mm off the wall.



Vesima Cover Cap Sets - Chrome

Description	Code	€ Ex VAT	€ Inc VAT
Cover Cap Set 303mm	86.0132	38.00	**46.74**
Cover Cap Set 403mm	86.0133	47.00	**57.81**
Cover Cap Set 503mm	86.0134	54.00	**66.42**
Cover Cap Set 603mm	86.0135	66.00	**81.18**

Cover cap sets only include cover caps for the top of the radiator.

For element types see pages 718-729.

Element can be installed vertically on the right-hand side or left-hand side on the bottom header. Radiators that are electric only are restricted to the heat output of the elements. For dual fuel installations, element must be installed on flow side.



Aluminium Range

VESIMA HORIZONTAL



Pictured 86.0101 Matt White & 86.0138 Cover Caps x2

A sleek elegant radiator with clean lines which will provide a stylish focus to any room. Available in three colours as well as horizontal and vertical designs.

FEATURES

- Excellent heat conductivity and lightweight
- Only requires a low water volume
- Heats up very quickly
- Radiators come with cover caps on top and bottom, same as radiator colour
- Tested to BS EN 442 standards
- 5 Year Manufacturer's Warranty*
- Can be single or dual fuel, or all electric

* With conditions

Technical Tables & Drawings
Page 794-795

Warranty 5 Year | Heating | All Electric | Dual-Fuel

Aluminium Range

VESIMA HORIZONTAL

Matt White



Matt Anthracite

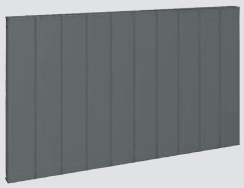

Matt Black



Vesima Cover Cap Sets

Cover cap sets only include cover caps for the top or bottom of the radiator.

TECHNICAL INFORMATION

All measurements in Height by Width. Heat output based on ▲T60˚C. For matching valves see pages 731-737. Corrosion inhibitor must be added to the heating system and maintained. Flow diverter must only be fitted when radiator installed on central heating system. For indirect heating systems only. Tappings are the width of the rail and 60 or 80mm off the wall. Element can only be installed horizontally on the bottom header.

Vesima Horizontal Aluminium Radiators - Matt White

Size H x W	Watts	BTU	Element Output	Element Type	Code	€ Ex VAT	€ Inc VAT
600 x 503mm	660	2252	300W	A, C, H	86.0089	383.00	**471.09**
600 x 603mm	792	2702	300W	A, C, H	86.0092	440.00	**541.20**
600 x 803mm	1056	3603	600W	A, C, H	86.0095	552.00	**678.96**
600 x 1003mm	1320	4504	600W	A, C, H	86.0098	670.00	**824.10**
600 x 1203mm	1584	5405	900W	A, C, H	86.0101	783.00	**963.09**
600 x 1403mm	1844	6293	900W	A, C, H	86.0479	955.00	**1174.65**

Vesima Horizontal Aluminium Radiators - Matt Anthracite

Size H x W	Watts	BTU	Element Output	Element Type	Code	€ Ex VAT	€ Inc VAT
600 x 503mm	660	2252	300W	A, C, H	86.0090	383.00	**471.09**
600 x 603mm	792	2702	300W	A, C, H	86.0093	440.00	**541.20**
600 x 803mm	1056	3603	600W	A, C, H	86.0096	552.00	**678.96**
600 x 1003mm	1320	4504	600W	A, C, H	86.0099	670.00	**824.10**
600 x 1203mm	1584	5405	900W	A, C, H	86.0102	783.00	**963.09**
600 x 1403mm	1844	6293	900W	A, C, H	86.0480	955.00	**1174.65**

Vesima Horizontal Aluminium Radiators - Matt Black

Size H x W	Watts	BTU	Element Output	Element Type	Code	€ Ex VAT	€ Inc VAT
600 x 503mm	660	2252	300W	A, C, H	86.0091	383.00	**471.09**
600 x 603mm	792	2702	300W	A, C, H	86.0094	440.00	**541.20**
600 x 803mm	1056	3603	600W	A, C, H	86.0097	552.00	**678.96**
600 x 1003mm	1320	4504	600W	A, C, H	86.0100	670.00	**824.10**
600 x 1203mm	1584	5405	900W	A, C, H	86.0103	783.00	**963.09**
600 x 1403mm	1844	6293	900W	A, C, H	86.0481	955.00	**1174.65**

Prices include radiator and wall fixing sets, valves and accessories extra.



Pictured 86.0480 Matt Anthracite



Vesima Cover Cap Sets - Chrome

Description	Code	€ Ex VAT	€ Inc VAT
Cover Cap Set 503mm	86.0134	54.00	**66.42**
Cover Cap Set 603mm	86.0135	66.00	**81.18**
Cover Cap Set 803mm	86.0136	80.00	**98.40**
Cover Cap Set 1003mm	86.0137	103.00	**126.69**
Cover Cap Set 1203mm	86.0138	118.00	**145.14**
Cover Cap Set 1403mm	86.0487	129.00	**158.67**

Radiator Valves
Page 731-737





For element types see pages 718-729.

Element can only be installed horizontally on the bottom header. Radiators that are electric only are restricted to the heat output of the elements (Type C up to 900 watts).



Aluminium Range

PRESTON VERTICAL



Pictured 89.0161 Matt White & 89.0164 Towel Hangers



Pictured 89.0793 Matt Black & 89.0164 Towel Hangers

A slimline radiator ideal for those situations where space is at a minimium. With the additional extra towel hangers this radiator is ideal for drying kitchen or bathroom towels. Available in three finishes.

FEATURES
- Excellent heat conductivity and lightweight
- Only requires a low water volume
- Heats up very quickly
- Radiators come with cover caps on top and bottom, same as radiator colour
- Tested to BS EN 442 standards
- 5 Year Manufacturer's Warranty*
- Can be single or dual fuel, or all electric

* With conditions

Technical Tables & Drawings
Page 794-795

Multi-Purpose Towel Hangers
Page 740

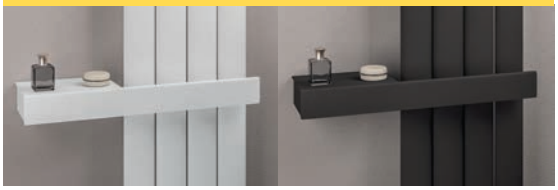

Warranty 5 Year | Heating | All Electric | Dual-Fuel

Aluminium Range

PRESTON VERTICAL

Preston Aluminium Radiators - Matt White							
Size H x W	Watts	BTU	Element Output	Element Type	Code	€ Ex VAT	€ Inc VAT
1200 x 185mm	374	1277	150W	A, A+, F, G	89.0791	262.00	**322.26**
1800 x 185mm	540	1843	300W	A, A+, F, G	89.0161	283.00	**348.09**

Preston Aluminium Radiators - Matt Anthracite							
Size H x W	Watts	BTU	Element Output	Element Type	Code	€ Ex VAT	€ Inc VAT
1200 x 185mm	374	1277	150W	A, A+, F, G	89.0792	262.00	**322.26**
1800 x 185mm	540	1843	300W	A, A+, F, G	89.0162	283.00	**348.09**

Preston Aluminium Radiator s- Matt Black							
Size H x W	Watts	BTU	Element Output	Element Type	Code	€ Ex VAT	€ Inc VAT
1200 x 185mm	374	1277	150W	A, A+, F, G	89.0793	262.00	**322.26**
1800 x 185mm	540	1843	300W	A, A+, F, G	89.0163	283.00	**348.09**

Prices include radiator and wall fixing sets, valves and accessories extra.

TECHNICAL INFORMATION

All measurements in Height by Width. Heat output based on ▲T60˚C. For matching valves see pages 731-737. Corrosion inhibitor must be added to the heating system and maintained. Flow diverter must only be fitted when radiator installed on central heating system. For indirect heating systems only. Tappings are the width of the rail and 33 or 53mm off the wall.





Preston Cover Cap Sets - Chrome			
Cap Set Size	Code	€ Ex VAT	€ Inc VAT
185mm	89.0175	23.00	**28.29**

Cover cap set only includes cover caps for the top or bottom of the radiator.

Preston Standard Towel Hangers				
Hanger Size	Colour	Code	€ Ex VAT	€ Inc VAT
185mm	Premium Mirror Polished	86.0207	89.00	**109.47**
185mm	Matt White	89.0204	72.00	**88.56**
185mm	Matt Anthracite	89.0205	72.00	**88.56**
185mm	Matt Black	89.0206	72.00	**88.56**
185mm	Chrome	89.0164	61.00	**75.03**

1800mm height radiator comes with 3 pre-drilled towel hanger locations, with a maximum of 3 towel hangers. 1200mm height radiators comes with 2 predrilled towel hanger locations, with a maximum of 2 towel hangers. The Preston Standard Towel Hangers will add approx. 23mm width on each side once fitted to the radiator. **Can be fitted after installation only on high adjustment bracket fitting.**



Premium
86.0207



Matt White
89.0204



Matt Anthracite
89.0205



Matt Black
89.0206



Chrome
89.0164



Pictured 89.0162 Matt Anthracite with 89.0164 Towel Hangers x3 & 89.0175 Cover Caps x2

For element types see pages 718-729.

Element can only be installed vertically on the right-hand side on the bottom header. Radiators that are electric only are restricted to the heat output of the elements. Element size can be increased to full capacity of rail if using element type F or G. For dual fuel installations, element must be installed on flow side.



Round Vent Caps
Page 741



Aluminium Range

BERLINI VERTICAL



Pictured 86.0186 Polished Aluminium with 86.0110 Towel Hangers x3 & 86.0139 Cover Caps x2



Pictured 86.0107 Matt White with 86.0110 Towel Hangers

This slimline radiator will be an ideal solution for those tight spaces. The radiator looks stunning paired with the towel hangers to complete the look. Available in four finishes, this radiator heats up quickly and is lightweight.

FEATURES
- Excellent heat conductivity and lightweight
- Only requires a low water volume
- Heats up very quickly
- Radiators come with cover caps on top and bottom, same as radiator colour
- Tested to BS EN 442 standards
- 5 Year Manufacturer's Warranty*
- Can be single or dual fuel, or all electric

* With conditions

Technical Tables & Drawings
Page 794-795

Multi-Purpose Towel Hangers
Page 740



Warranty 5 Year | Heating | All Electric | Dual-Fuel

Aluminium Range

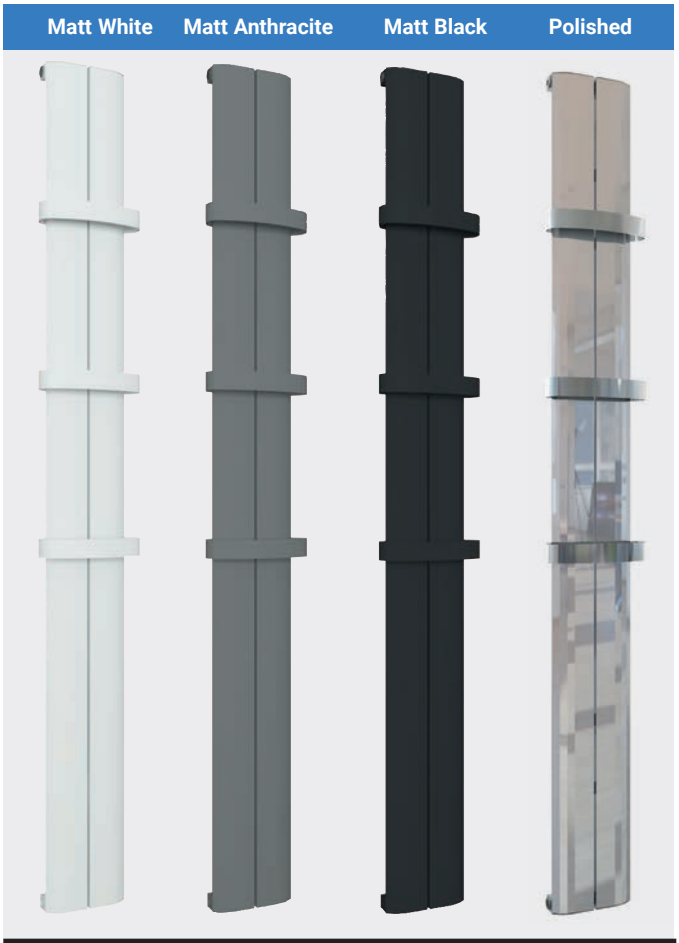

Berlini Aluminium Radiator - Matt White

Size H x W	Watts	BTU	Element Output	Element Type	Code	€ Ex VAT	€ Inc VAT
1200 x 185mm	421	1438	150W	A, A+	86.0144	313.00	**384.99**
1800 x 185mm	632	2156	300W	A, A+	86.0107	334.00	**410.82**

Berlini Aluminium Radiator - Matt Anthracite

Size H x W	Watts	BTU	Element Output	Element Type	Code	€ Ex VAT	€ Inc VAT
1200 x 185mm	421	1438	150W	A, A+	86.0145	313.00	**384.99**
1800 x 185mm	632	2156	300W	A, A+	86.0108	334.00	**410.82**

Berlini Aluminium Radiator - Matt Black

Size H x W	Watts	BTU	Element Output	Element Type	Code	€ Ex VAT	€ Inc VAT
1200 x 185mm	421	1438	150W	A, A+	86.0146	313.00	**384.99**
1800 x 185mm	632	2156	300W	A, A+	86.0109	334.00	**410.82**

Berlini Aluminium Radiator - Polished Aluminium

Size H x W	Watts	BTU	Element Output	Element Type	Code	€ Ex VAT	€ Inc VAT
1200 x 185mm	408	1393	150W	A, A+	86.0185	342.00	**420.66**
1800 x 185mm	611	2092	300W	A, A+	86.0186	390.00	**479.70**

Prices include radiator and wall fixing sets, valves and accessories extra.

TECHNICAL INFORMATION

All measurements in Height by Width. Heat output based on ▲T60˚C. For matching valves see pages 731-737. Corrosion inhibitor must be added to the heating system and maintained. Flow diverter must only be fitted when radiator installed on central heating system. For indirect heating systems only. Tappings are the width of the rail and 35 or 55mm off the wall.

For element types see pages 718-729.

Element can only be installed vertically on the right hand side on the bottom header. Radiators that are electric only are restricted to the heat output of the elements. For dual fuel installations, element must be installed on flow side.



BERLINI VERTICAL



Pictured 86.0145 Matt Anthracite with 89.0882R Multi-Purpose Towel Hanger & 86.0139 Cover Caps x2



Matt Black
89.0206



Chrome
86.0110



Matt White
89.0204



Matt Anthracite
89.0205



Premium Mirror Polished
86.0207

Berlini Standard Towel Hangers

Description	Colour	Code	€ Ex VAT	€ Inc VAT
Towel Hanger 185mm	Premium Mirror Polished	86.0207	89.00	**109.47**
Towel Hanger 185mm	Matt White	89.0204	72.00	**88.56**
Towel Hanger 185mm	Matt Anthracite	89.0205	72.00	**88.56**
Towel Hanger 185mm	Matt Black	89.0206	72.00	**88.56**
Towel Hanger 185mm	Chrome	86.0110	62.00	**76.26**

1800mm height radiator comes with 3 pre-drilled towel hanger locations, with a maximum of 3 towel hangers.1200mm height radiators comes with 2 pre-drilled towel hanger locations, with a maximum of 2 towel hangers. The Preston Standard Towel Hangers will add approx 23mm width on each side once fitted to the radiator. **Can be fitted after installation only on high adjustment bracket fitting.**

Berlini Cover Cap Set - Chrome

Description	Code	€ Ex VAT	€ Inc VAT
Cover Cap Set 185mm	86.0139	34.00	**41.82**

Cover cap sets only include cover caps for the top of the radiator.



Aluminium Range

FAIRFORD VERTICAL



Pictured 89.0227 Matt Anthracite with 89.0320 Towel Hangers

Round Vent Caps
Page 741

This slimline radiator is an ideal solution for those tight or tall spaces. This wavy element design has a curved front that
will provide a stylish warmth to any room. Available in two colours as well as horizontal and vertical designs.

FEATURES
- Excellent heat conductivity and lightweight
- Only requires a low water volume
- Heats up very quickly
- Radiators come with cover caps on top and bottom, same as radiator colour
- Tested to BS EN 442 standards
- 5 Year Manufacturer's Warranty*
- Can be single or dual fuel, or all electric

* With conditions

Technical Tables & Drawings
Page 796-797

Multi-Purpose Towel Hangers
Page 740

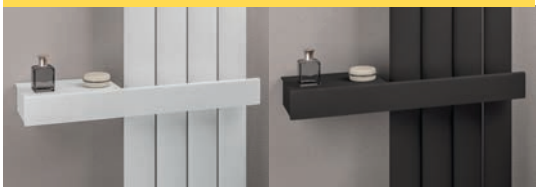

Aluminium Range

FAIRFORD VERTICAL

Fairford Vertical Aluminium Radiators - Matt White

Size H x W	Watts	BTU	Element Output	Element Type	Code	€ Ex VAT	€ Inc VAT
1200 x 375mm	760	2594	450W	A, A+, F, G	89.0221	531.00	**653.13**
1200 x 565mm	1144	3904	750W	A, A+, F, G	89.0737	754.00	**927.42**
1800 x 375mm	1140	3890	750W	A, A+, F, G	89.0222	614.00	**755.22**
1800 x 565mm	1716	5855	1000W	A, A+, F, G	89.0735	874.00	**1075.02**

Fairford Vertical Aluminium Radiators - Matt Anthracite

Size H x W	Watts	BTU	Element Output	Element Type	Code	€ Ex VAT	€ Inc VAT
1200 x 375mm	760	2594	450W	A, A+, F, G	89.0227	531.00	**653.13**
1200 x 565mm	1144	3904	750W	A, A+, F, G	89.0738	754.00	**927.42**
1800 x 375mm	1140	3890	750W	A, A+, F, G	89.0228	614.00	**755.22**
1800 x 565mm	1716	5855	1000W	A, A+, F, G	89.0736	874.00	**1075.02**

Prices include radiator and wall fixing sets, valves and accessories extra.



Fairford Cover Caps - Chrome

Description	Code	€ Ex VAT	€ Inc VAT
Cover Cap 375mm	89.0399	28.00	**34.44**
Cover Cap 565mm	89.0400	37.00	**45.51**

Cover cap set only includes cover caps for the top or bottom of the radiator.

For element types see pages 718-729.

Element can only be installed vertically on the right-hand side on the bottom header. Radiators that are electric only are restricted to the heat output of the elements. Element size can be increased to full capacity of rail if using element type F or G. For dual fuel installations, element must be installed on flow side.



TECHNICAL INFORMATION

All measurements in Height by Width. Heat output based on ▲T60˚C. For matching valves see pages 731-737. Corrosion inhibitor must be added to the heating system and maintained. Flow diverter must only be fitted when radiator installed on central heating system. For indirect heating systems only. Tappings are the width of the rail and 33 or 53mm off the wall.

FAIRFORD STANDARD TOWEL HANGERS

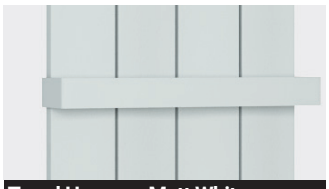

Towel Hanger - Matt White

Size	Code	€ Ex VAT	€ Inc VAT
375mm	89.0318	75.00	**92.25**
565mm	89.0319	93.00	**114.39**



Towel Hanger - Matt Anthracite

Size	Code	€ Ex VAT	€ Inc VAT
375mm	89.0320	75.00	**92.25**
565mm	89.0321	93.00	**114.39**



Towel Hanger - Chrome

Size	Code	€ Ex VAT	€ Inc VAT
375mm	89.0322	75.00	**92.25**
565mm	89.0323	93.00	**114.39**

1800mm height radiators come with 3 pre-drilled towel hanger locations, with a maximum of 3 towel hangers.

1200mm height radiators come with 2 pre-drilled towel hanger locations, with a maximum of 2 towel hangers.

The standard towel hangers are compatible with the Vertical radiators. (Depending on the radiators and hangers width)

Can be fitted after installation only on high adjustment bracket fitting.

The Fairford Standard Towel Hangers will add approx 8mm width on each side once fitted to the radiator.



Pictured 89.0222 Matt White with 89.0322 Towel Hangers

Aluminium Range

FAIRFORD HORIZONTAL

Warranty 5 Year | Heating | All Electric | Dual-Fuel



Pictured 89.0225 Matt Anthracite

This modern radiator has a curved front design that will provide a stylish warmth to any room. Available in two colours as well as horizontal and vertical designs.

Fairford Horizontal Aluminium Radiators - Matt White

Size H x W	Watts	BTU	Element Output	Element Type	Code	€ Ex VAT	€ Inc VAT
600 x 375mm	392	1338	300W	A, A+	89.0217	308.00	**378.84**
600 x 565mm	591	2017	300W	A, A+, C, H	89.0218	432.00	**531.36**
600 x 945mm	987	3368	600W	A, A+, C, H	89.0219	707.00	**869.61**
600 x 1325mm	1382	4716	900W	A, A+, C, H	89.0220	975.00	**1199.25**

Fairford Horizontal Aluminium Radiators - Matt Anthracite

Size H x W	Watts	BTU	Element Output	Element Type	Code	€ Ex VAT	€ Inc VAT
600 x 375mm	392	1338	300W	A, A+	89.0223	308.00	**378.84**
600 x 565mm	591	2017	300W	A, A+, C, H	89.0224	432.00	**531.36**
600 x 945mm	987	3368	600W	A, A+, C, H	89.0225	707.00	**869.61**
600 x 1325mm	1382	4716	900W	A, A+, C, H	89.0226	975.00	**1199.25**

Prices include radiator and wall fixing sets, valves and accessories extra.

FEATURES

- Excellent heat conductivity and lightweight
- Only requires a low water volume
- Heats up very quickly
- Radiators come with cover caps on top and bottom, same as radiator colour
- Tested to BS EN 442 standards
- 5 Year Manufacturer's Warranty*
- Can be single or dual fuel, or all electric

* With conditions

Technical Tables & Drawings
Page 796-797

Round Vent Caps
Page 741



Aluminium Range

FAIRFORD HORIZONTAL



Pictured 89.0220 Matt White

FAIRFORD STANDARD TOWEL HANGERS



Towel Hanger - Matt White

Size	Code	€ Ex VAT	€ Inc VAT
375mm*	89.0318	75.00	**92.25**
565mm**	89.0319	93.00	**114.39**
Suitable 375mm width radiators only*			
Suitable 565mm width radiators only**			



Towel Hanger - Chrome

Size	Code	€ Ex VAT	€ Inc VAT
375mm*	89.0322	75.00	**92.25**
565mm**	89.0323	93.00	**114.39**
Suitable 375mm width radiators only*			
Suitable 565mm width radiators only**			

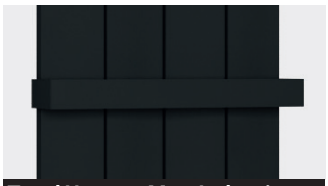

Towel Hanger - Matt Anthracite

Size	Code	€ Ex VAT	€ Inc VAT
375mm*	89.0320	75.00	**92.25**
565mm**	89.0321	93.00	**114.39**
Suitable 375mm width radiators only*			
Suitable 565mm width radiators only**			

600mm height radiators come with 1 pre-drilled towel hanger location, with a maximum of 1 towel hanger. (only 375 and 565mm widths)

The Standard Towel Hangers are compatible with the Horizontal radiators. (Depending on the radiators and hangers width)

Can be fitted after installation only on high adjustment bracket fitting.

The Fairford Standard Towel Hangers will add approx 8mm width on each side once fitted to the radiator.



Fairford Cover Cap Set - Chrome

Description	Code	€ Ex VAT	€ Inc VAT
Cover Cap 375mm	89.0399	28.00	**34.44**
Cover Cap 565mm	89.0400	37.00	**45.51**
Cover Cap 945mm	89.0401	49.00	**60.27**
Cover Cap 1325mm	89.0402	66.00	**81.18**
Cover cap set only includes cover caps for the top or bottom of the radiator.			

For element types see pages 718-729.

Element can only be installed horizontally on the bottom header. Radiators that are electric only are restricted to the heat output of the elements (Type C up to 900 watts).



TECHNICAL INFORMATION

All measurements in Height by Width. Heat output based on ▲T60˚C. For matching valves see pages 731-737. Corrosion inhibitor must be added to the heating system and maintained. Flow diverter must only be fitted when radiator installed on central heating system. For indirect heating systems only. Tappings are the width of the rail and 33 or 53mm off the wall.

Aluminium Range

BURFORD VERTICAL

Pictured 89.0236 Matt White with 89.0342 Towel Hangers



Technical Tables & Drawings
Page 796-797

This slimline radiator would be an ideal solution for those tight or tall spaces. This design has a curved front that will provide a stylish warmth to any room. Available in two colours as well as horizontal and vertical designs.

FEATURES

- Excellent heat conductivity and lightweight
- Only requires a low water volume
- Heats up very quickly
- Radiators come with cover caps on top and bottom, same as radiator colour
- Tested to BS EN 442 standards
- 5 Year Manufacturer's Warranty*
- Can be single or dual fuel, or all electric

* With conditions

For element types see pages 718-729.

Element can only be installed vertically on the right-hand side on the bottom header. Radiators that are electric only are restricted to the heat output of the elements. Element size can be increased to full capacity of rail if using element type F or G. For dual fuel installations, element must be installed on flow side.

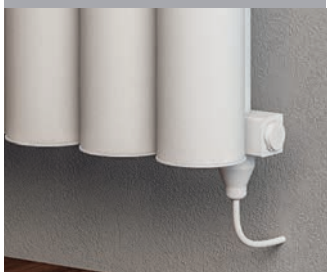

Round Vent Caps
Page 741



Multi-Purpose Towel Hangers
Page 740



Aluminium Range

BURFORD VERTICAL

Pictured 89.0243 Matt Anthracite
with 89.0891L Multi-Purpose Towel Hanger



Burford Vertical Aluminium Radiators - Matt White

Size H x W	Watts	BTU	Element Output	Element Type	Code	€ Ex VAT	€ Inc VAT
1800 x 275mm	972	3317	600W	A, A+, F, G	89.0234	579.00	**712.17**
1800 x 345mm	1209	4126	750W	A, A+, F, G	89.0235	692.00	**851.16**
1800 x 415mm	1443	4924	900W	A, A+, F, G	89.0236	824.00	**1013.52**
1800 x 485mm	1676	5719	1000W	A, A+, F, G	89.0237	948.00	**1166.04**

Burford Vertical Aluminium Radiators - Matt Anthracite

Size H x W	Watts	BTU	Element Output	Element Type	Code	€ Ex VAT	€ Inc VAT
1800 x 275mm	972	3317	600W	A, A+, F, G	89.0243	579.00	**712.17**
1800 x 345mm	1209	4126	750W	A, A+, F, G	89.0244	692.00	**851.16**
1800 x 415mm	1443	4924	900W	A, A+, F, G	89.0245	824.00	**1013.52**
1800 x 485mm	1676	5719	1000W	A, A+, F, G	89.0246	948.00	**1166.04**

Prices include radiator and wall fixing sets, valves and accessories extra.

TECHNICAL INFORMATION

All measurements in Height by Width. Heat output based on ▲T60˚C. For matching valves see pages 731-737. Corrosion inhibitor must be added to the heating system and maintained. Flow diverter must only be fitted when radiator installed on central heating system. For indirect heating systems only. Tappings are the width of the rail and 33 or 53mm off the wall.

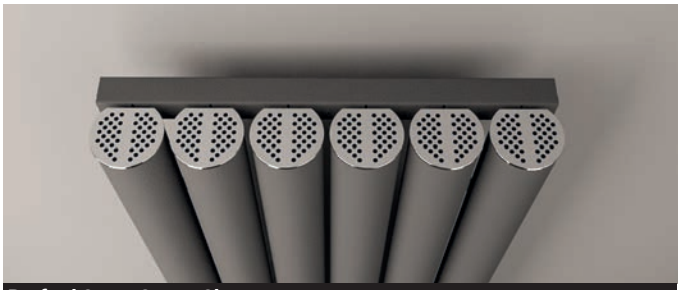

Burford Cover Caps - Chrome

Description	Code	€ Ex VAT	€ Inc VAT
Cover Cap 275mm	89.0403	30.00	**36.90**
Cover Cap 345mm	89.0404	34.00	**41.82**
Cover Cap 415mm	89.0405	40.00	**49.20**
Cover Cap 485mm	89.0406	42.00	**51.66**

Cover cap set only includes cover caps for the top or bottom of the radiator.

BURFORD STANDARD TOWEL HANGERS



Towel Hanger - Matt White

Size	Code	€ Ex VAT	€ Inc VAT
275mm	89.0330	72.00	**88.56**
345mm	89.0331	75.00	**92.25**
415mm	89.0332	84.00	**103.32**
485mm	89.0333	97.00	**119.31**



Towel Hanger - Matt Anthracite

Size	Code	€ Ex VAT	€ Inc VAT
275mm	89.0335	72.00	**88.56**
345mm	89.0336	75.00	**92.25**
415mm	89.0337	84.00	**103.32**
485mm	89.0338	97.00	**119.31**



Towel Hanger - Chrome

Size	Code	€ Ex VAT	€ Inc VAT
275mm	89.0340	72.00	**88.56**
345mm	89.0341	75.00	**92.25**
415mm	89.0342	84.00	**103.32**
485mm	89.0343	97.00	**119.31**

1800mm height radiators come with 3 pre-drilled towel hanger locations, with a maximum of 3 towel hangers. (all widths; 275, 345, 415 and 485mm)

The Standard Towel Hangers are compatible with the Vertical radiators. (Depending on the radiators and hangers width)

Can be fitted after installation only on high adjustment bracket fitting.

The Burford Standard Towel Hangers will add approx 50mm width on each side once fitted to the radiator.

Aluminium Range

BURFORD HORIZONTAL



Pictured 89.0230 Matt White with 89.0344 Towel Hanger

This modern radiator has a curved front design that will provide a stylish warmth to any room. Available in two colours as well as horizontal and vertical designs.

Burford Horizontal Aluminium Radiators - Matt White

Size H x W	Watts	BTU	Element Output	Element Type	Code	€ Ex VAT	€ Inc VAT
600 x 485mm	606	2068	300W	A, A+, C, H	89.0229	492.00	**605.16**
600 x 625mm	772	2635	450W	A, A+, C, H	89.0230	614.00	**755.22**
600 x 835mm	1020	3481	600W	A, A+, C, H	89.0231	812.00	**998.76**
600 x 1045mm	1265	4317	750W	A, A+, C, H	89.0232	1000.00	**1230.00**
600 x 1185mm	1427	4869	900W	A, A+, C, H	89.0233	1120.00	**1377.60**

Burford Horizontal Aluminium Radiators - Matt Anthracite

Size H x W	Watts	BTU	Element Output	Element Type	Code	€ Ex VAT	€ Inc VAT
600 x 485mm	606	2068	300W	A, A+, C, H	89.0238	492.00	**605.16**
600 x 625mm	772	2635	450W	A, A+, C, H	89.0239	614.00	**755.22**
600 x 835mm	1020	3481	600W	A, A+, C, H	89.0240	812.00	**998.76**
600 x 1045mm	1265	4317	750W	A, A+, C, H	89.0241	1000.00	**1230.00**
600 x 1185mm	1427	4869	900W	A, A+, C, H	89.0242	1120.00	**1377.60**

Prices include radiator and wall fixing sets, valves and accessories extra.

FEATURES

- Excellent heat conductivity and lightweight
- Only requires a low water volume
- Heats up very quickly
- Radiators come with cover caps on top and bottom, same as radiator colour
- Tested to BS EN 442 standards
- 5 Year Manufacturer's Warranty*
- Can be single or dual fuel, or all electric

* With conditions

Technical Tables & Drawings
Page 796-797

Multi-Purpose Towel Hangers
Page 740

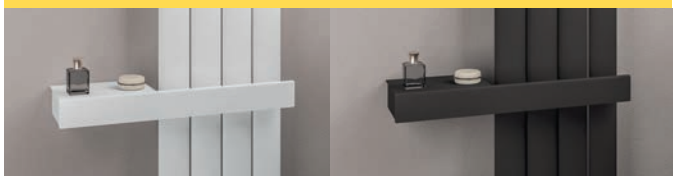

Aluminium Range

BURFORD HORIZONTAL



Pictured 89.0241 Matt Anthracite

BURFORD STANDARD TOWEL HANGERS



Towel Hanger - Matt White

Size	Code	€ Ex VAT	€ Inc VAT
485mm*	89.0333	97.00	**119.31**
625mm**	89.0334	111.00	**136.53**
Suitable 485mm width radiators only*			
Suitable 625mm width radiators only**			

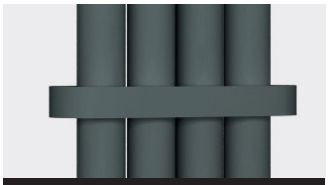

Towel Hanger - Matt Anthracite

Size	Code	€ Ex VAT	€ Inc VAT
485mm*	89.0338	97.00	**119.31**
625mm**	89.0339	111.00	**136.53**
Suitable 485mm width radiators only*			
Suitable 625mm width radiators only**			



Towel Hanger - Chrome

Size	Code	€ Ex VAT	€ Inc VAT
485mm*	89.0343	97.00	**119.31**
625mm**	89.0344	111.00	**136.53**
Suitable 485mm width radiators only*			
Suitable 625mm width radiators only**			

600mm height radiators come with 1 pre-drilled towel hanger location, with a maximum of 1 towel hanger. (only 485 and 625mm widths)

The Standard Towel Hangers are compatible with the Horizontal radiators. (Depending on the radiators and hangers width)

Can be fitted after installation only on high adjustment bracket fitting.

The Burford Standard Towel Hangers will add approx 50mm width on each side once fitted to the radiator.

Round Vent Caps
Page 741





Burford Cover Caps - Chrome

Description	Code	€ Ex VAT	€ Inc VAT
Cover Cap 485mm	89.0406	42.00	**51.66**
Cover Cap 625mm	89.0407	47.00	**57.81**
Cover Cap 835mm	89.0408	59.00	**72.57**
Cover Cap 1045mm	89.0409	69.00	**84.87**
Cover Cap 1185mm	89.0410	75.00	**92.25**
Cover cap set only includes cover caps for the top or bottom of the radiator.			

For element types see pages 718-729.

Element can only be installed horizontally on the bottom header. Radiators that are electric only are restricted to the heat output of the elements (Type C up to 900 watts).



TECHNICAL INFORMATION

All measurements in Height by Width. Heat output based on ▲T60˚C. For matching valves see pages 731-737. Corrosion inhibitor must be added to the heating system and maintained. Flow diverter must only be fitted when radiator installed on central heating system. For indirect heating systems only. Tappings are the width of the rail and 33 or 53mm off the wall.

Aluminium Range

KELMSCOTT VERTICAL

Pictured 89.0255 Matt White with 89.0358 Towel Hangers



Technical Tables & Drawings
Page 796-797

This slimline radiator would be an ideal solution for those tight or tall spaces. This design has a curved front that will provide a stylish warmth to any room. Available in two colours as well as horizontal and vertical designs.

FEATURES

- Excellent heat conductivity and lightweight
- Only requires a low water volume
- Heats up very quickly
- Radiators come with cover caps on top and bottom, same as radiator colour
- Tested to BS EN 442 standards
- 5 Year Manufacturer's Warranty*
- Can be single or dual fuel, or all electric

* With conditions

For element types see pages 718-729.

Element can only be installed vertically on the right-hand side on the bottom header. Radiators that are electric only are restricted to the heat output of the elements. Element size can be increased to full capacity of rail if using element type F or G. For dual fuel installations, element must be installed on flow side.

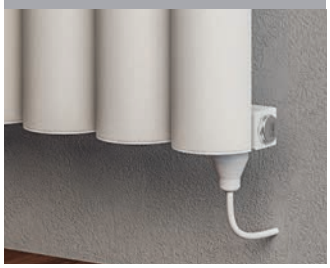

Round Vent Caps
Page 741

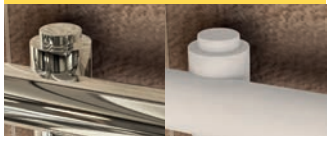

Multi-Purpose Towel Hangers
Page 740



Aluminium Range

KELMSCOTT VERTICAL

Pictured 89.0262 Matt Anthracite with 89.0351 Towel Hangers



Kelmscott Vertical Aluminium Radiators - Matt White							
Size H x W	Watts	BTU	Element Output	Element Type	Code	€ Ex VAT	€ Inc VAT
1800 x 275mm	957	3266	600W	A, A+, F, G	89.0252	553.00	**680.19**
1800 x 345mm	1195	4078	750W	A, A+, F, G	89.0253	667.00	**820.41**
1800 x 415mm	1431	4883	900W	A, A+, F, G	89.0254	789.00	**970.47**
1800 x 485mm	1666	5685	1000W	A, A+, F, G	89.0255	909.00	**1118.07**

Kelmscott Vertical Aluminium Radiators - Matt Anthracite							
Size H x W	Watts	BTU	Element Output	Element Type	Code	€ Ex VAT	€ Inc VAT
1800 x 275mm	957	3266	600W	A, A+, F, G	89.0261	553.00	**680.19**
1800 x 345mm	1195	4078	750W	A, A+, F, G	89.0262	667.00	**820.41**
1800 x 415mm	1431	4883	900W	A, A+, F, G	89.0263	789.00	**970.47**
1800 x 485mm	1666	5685	1000W	A, A+, F, G	89.0264	909.00	**1118.07**

Prices include radiator and wall fixing sets, valves and accessories extra.

TECHNICAL INFORMATION

All measurements in Height by Width. Heat output based on ▲T60˚C. For matching valves see pages 731-737. Corrosion inhibitor must be added to the heating system and maintained. Flow diverter must only be fitted when radiator installed on central heating system. For indirect heating systems only. Tappings are the width of the rail and 33 or 53mm off the wall.



Kelmscott Cover Cap Set - Chrome			
Description	Code	€ Ex VAT	€ Inc VAT
Cover Cap 275mm	89.0411	28.00	**34.44**
Cover Cap 345mm	89.0412	31.00	**38.13**
Cover Cap 415mm	89.0413	34.00	**41.82**
Cover Cap 485mm	89.0414	40.00	**49.20**

Cover cap set only includes cover caps for the top or bottom of the radiator.

KELMSCOTT STANDARD TOWEL HANGERS



Towel Hanger - Matt White			
Size	Code	€ Ex VAT	€ Inc VAT
275mm	89.0345	69.00	**84.87**
345mm	89.0346	70.00	**86.10**
415mm	89.0347	75.00	**92.25**
485mm	89.0348	91.00	**111.93**



Towel Hanger - Matt Anthracite			
Size	Code	€ Ex VAT	€ Inc VAT
275mm	89.0350	69.00	**84.87**
345mm	89.0351	70.00	**86.10**
415mm	89.0352	75.00	**92.25**
485mm	89.0353	91.00	**111.93**



Towel Hanger - Chrome			
Size	Code	€ Ex VAT	€ Inc VAT
275mm	89.0355	69.00	**84.87**
345mm	89.0356	70.00	**86.10**
415mm	89.0357	75.00	**92.25**
485mm	89.0358	91.00	**111.93**

1800mm height radiators come with 3 pre-drilled towel hanger locations, with a maximum of 3 towel hangers. (all widths; 275, 345, 415 and 485mm)

The Standard Towel Hangers are only compatible with the Vertical radiators. (Depending on the radiators and hangers width)

Can be fitted after installation only on high adjustment bracket fitting.

The Kelmscott Standard Towel Hangers will add approx 43mm width on each side once fitted to the radiator.

Aluminium Range

KELMSCOTT HORIZONTAL

Pictured 89.0257 Matt Anthracite with 89.0415 x 2 Cover Caps



This modern radiator has a curved front design that will provide a stylish warmth to any room. Available in two colours as well as horizontal and vertical designs.

Kelmscott Horizontal Aluminium Radiators - Matt White

Size H x W	Watts	BTU	Element Output	Element Type	Code	€ Ex VAT	€ Inc VAT
600 x 485mm	603	2058	300W	A, A+, C, H	89.0247	467.00	**574.41**
600 x 625mm	773	2638	450W	A, A+, C, H	89.0248	588.00	**723.24**
600 x 835mm	1025	3498	600W	A, A+, C, H	89.0249	777.00	**955.71**
600 x 1045mm	1277	4358	750W	A, A+, C, H	89.0250	962.00	**1183.26**
600 x 1185mm	1444	4927	900W	A, A+, C, H	89.0251	1076.00	**1323.48**

Kelmscott Horizontal Aluminium Radiators - Matt Anthracite

Size H x W	Watts	BTU	Element Output	Element Type	Code	€ Ex VAT	€ Inc VAT
600 x 485mm	603	2058	300W	A, A+, C, H	89.0256	467.00	**574.41**
600 x 625mm	773	2638	450W	A, A+, C, H	89.0257	588.00	**723.24**
600 x 835mm	1025	3498	600W	A, A+, C, H	89.0258	777.00	**955.71**
600 x 1045mm	1277	4358	750W	A, A+, C, H	89.0259	962.00	**1183.26**
600 x 1185mm	1444	4927	900W	A, A+, C, H	89.0260	1076.00	**1323.48**

Prices include radiator and wall fixing sets, valves and accessories extra.

FEATURES

- Excellent heat conductivity and lightweight
- Only requires a low water volume
- Heats up very quickly
- Radiators come with cover caps on top and bottom, same as radiator colour
- Tested to BS EN 442 standards
- 5 Year Manufacturer's Warranty*
- Can be single or dual fuel, or all electric

* With conditions

Technical Tables & Drawings
Page 798-799

Multi-Purpose Towel Hangers
Page 740

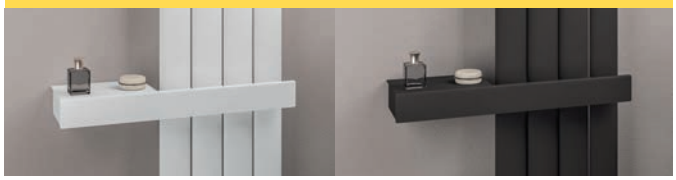

Aluminium Range

KELMSCOTT HORIZONTAL



Pictured 89.0250 Matt White

KELMSCOTT STANDARD TOWEL HANGERS



Towel Hanger - Matt White

Size	Code	€ Ex VAT	€ Inc VAT
485mm*	89.0348	91.00	**111.93**
625mm**	89.0349	104.00	**127.92**
Suitable 485mm width radiators only*			
Suitable 625mm width radiators only**			

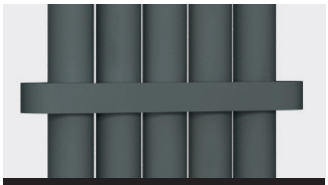

Towel Hanger - Matt Anthracite

Size	Code	€ Ex VAT	€ Inc VAT
485mm*	89.0353	91.00	**111.93**
625mm**	89.0354	104.00	**127.92**
Suitable 485mm width radiators only*			
Suitable 625mm width radiators only**			



Towel Hanger - Chrome

Size	Code	€ Ex VAT	€ Inc VAT
485mm*	89.0358	91.00	**111.93**
625mm**	89.0359	104.00	**127.92**
Suitable 485mm width radiators only*			
Suitable 625mm width radiators only**			

600mm height radiators come with 1 pre-drilled towel hanger location, with a maximum of 1 towel hanger. (only 485 and 625mm widths)

The Standard Towel Hangers are compatible with the Horizontal radiators. (Depending on the radiators and hangers width)

Can be fitted after installation only on high adjustment bracket fitting.

The Kelmscott Standard Towel Hangers will add approx 43mm width on each side once fitted to the radiator.

Round Vent Caps
Page 741





Kelmscott Cover Caps - Chrome

Description	Code	€ Ex VAT	€ Inc VAT
Cover Cap 485mm	89.0414	40.00	**49.20**
Cover Cap 625mm	89.0415	45.00	**55.35**
Cover Cap 835mm	89.0416	55.00	**67.65**
Cover Cap 1045mm	89.0417	62.00	**76.26**
Cover Cap 1185mm	89.0418	69.00	**84.87**
Cover cap set only includes cover caps for the top or bottom of the radiator.			

For element types see pages 718-729.

Element can only be installed horizontally on the bottom header. Radiators that are electric only are restricted to the heat output of the elements (Type C up to 900 watts).



TECHNICAL INFORMATION

All measurements in Height by Width. Heat output based on ▲T60˚C. For matching valves see pages 731-737. Corrosion inhibitor must be added to the heating system and maintained. Flow diverter must only be fitted when radiator installed on central heating system. For indirect heating systems only. Tappings are the width of the rail and 33 or 53mm off the wall.

Aluminium Range

WITNEY VERTICAL

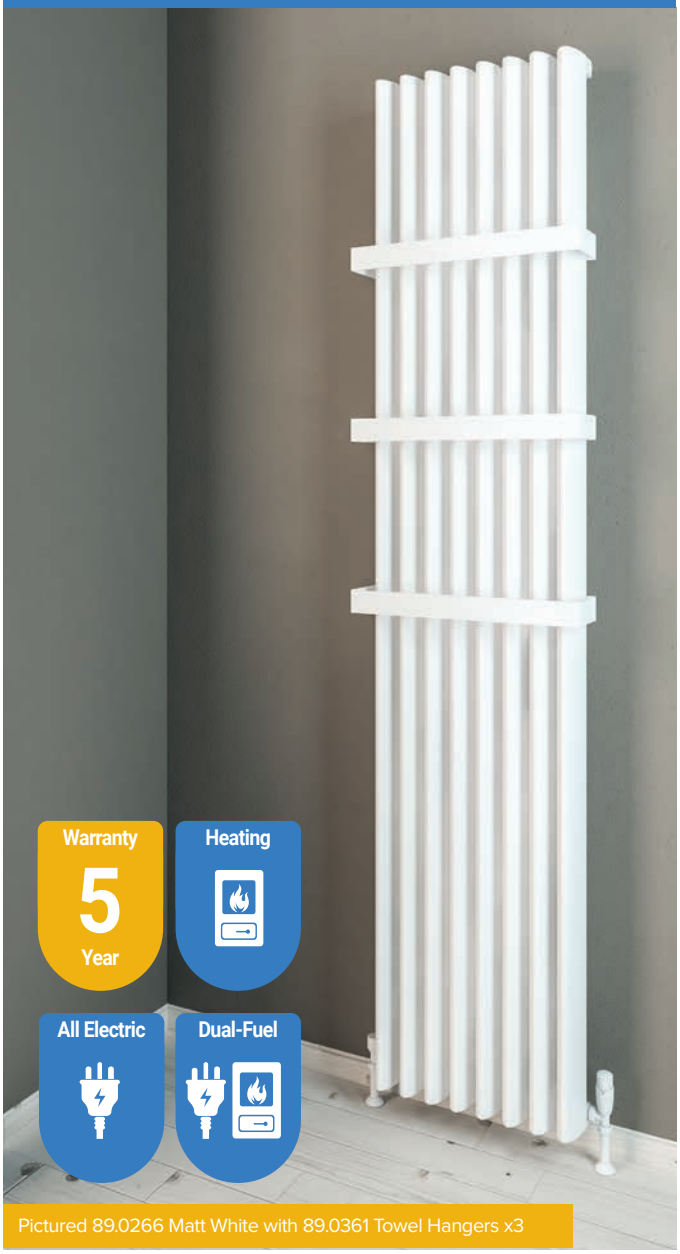

Pictured 89.0266 Matt White with 89.0361 Towel Hangers x3

A high heat capacity vertical radiator ideal for those situations where space is at a minimium. Available in two finishes, three widths and one height.

Witney Vertical Aluminium Radiators - Matt White

Size H x W	Watts	BTU	Element Output	Element Type	Code	€ Ex VAT	€ Inc VAT
1800 x 280mm	1252	4272	750W	A, A+, F, G	89.0265	782.00	**961.86**
1800 x 375mm	1648	5623	1000W	A, A+, F, G	89.0266	1029.00	**1265.67**
1800 x 470mm	2039	6958	1200W	A, A+, F, G	89.0267	1239.00	**1523.97**

Witney Vertical Aluminium Radiators - Matt Anthracite

Size H x W	Watts	BTU	Element Output	Element Type	Code	€ Ex VAT	€ Inc VAT
1800 x 280mm	1252	4272	750W	A, A+, F, G	89.0268	782.00	**961.86**
1800 x 375mm	1648	5623	1000W	A, A+, F, G	89.0269	1029.00	**1265.67**
1800 x 470mm	2039	6958	1200W	A, A+, F, G	89.0270	1239.00	**1523.97**

Prices include radiator and wall fixing sets, valves and accessories extra.

FEATURES

- Excellent heat conductivity and lightweight
- Only requires a low water volume
- Heats up very quickly
- Radiators come with cover caps on top and bottom, same as radiator colour
- Tested to BS EN 442 standards
- 5 Year Manufacturer's Warranty*
- Can be single or dual fuel, or all electric

* With conditions

Technical Tables & Drawings
Page 798-799

TECHNICAL INFORMATION

All measurements in Height by Width. Heat output based on ▲T60˚C. For matching valves see pages 731-737. Corrosion inhibitor must be added to the heating system and maintained. Flow diverter must only be fitted when radiator installed on central heating system. For indirect heating systems only. Tappings are the width of the rail and 33 or 53mm off the wall.



Witney Cover Cap Set - Chrome

Description	Code	€ Ex VAT	€ Inc VAT
Cover Cap 280mm	89.0419	42.00	**51.66**
Cover Cap 375mm	89.0420	51.00	**62.73**
Cover Cap 470mm	89.0421	61.00	**75.03**

Cover cap set only includes cover caps for the top or bottom of the radiator.

For element types see pages 718-729.

Element can only be installed vertically on the right-hand side on the bottom header. Radiators that are electric only are restricted to the heat output of the elements. Element size can be increased to full capacity of rail if using element type F or G. For dual fuel installations, element must be installed on flow side.



WITNEY STANDARD TOWEL HANGERS

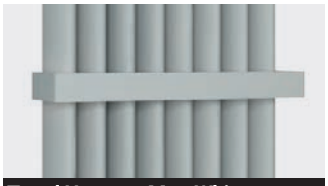

Towel Hanger - Matt White

Size	Code	€ Ex VAT	€ Inc VAT
280mm	89.0360	83.00	**102.09**
375mm	89.0361	87.00	**107.01**
470mm	89.0362	98.00	**120.54**

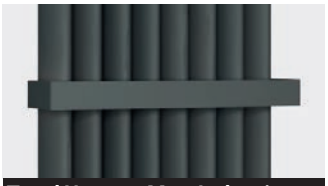

Towel Hanger - Matt Anthracite

Size	Code	€ Ex VAT	€ Inc VAT
280mm	89.0363	83.00	**102.09**
375mm	89.0364	87.00	**107.01**
470mm	89.0365	98.00	**120.54**

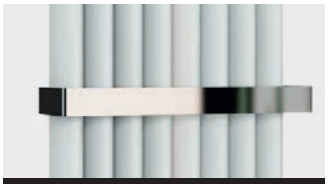

Towel Hanger - Chrome

Size	Code	€ Ex VAT	€ Inc VAT
280mm	89.0366	83.00	**102.09**
375mm	89.0367	87.00	**107.01**
470mm	89.0368	98.00	**120.54**

1800mm height radiators come with 3 pre-drilled towel hanger locations, with a maximum of 3 towel hangers. (all widths; 280, 375 and 470mm)

Can be fitted after installation only on high adjustment bracket fitting.

The Witney Towel Hangers will add approx 8mm width on each side once fitted to the radiator.

Radiator Valves
Page 731-737

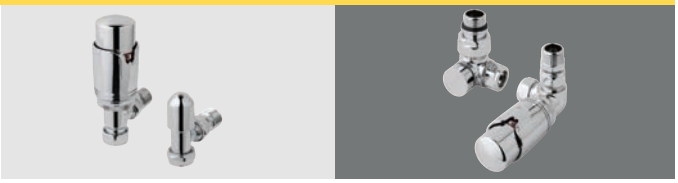

Aluminium Range

WITNEY HORIZONTAL



Pictured 89.0943 Matt White



Pictured 89.0978 Matt Anthracite

A high heat capacity horizontal radiator that will provide a stylish warmth to any room. Available in two finishes and five widths.

Witney Horizontal Aluminium Radiators - Matt White

Size H x W	Watts	BTU	Element Output	Element Type	Code	€ Ex VAT	€ Inc VAT
600 x 470mm	823	2809	300W	A, A+, C, H	89.0941	696.00	**856.08**
600 x 660mm	1132	3863	600W	A, A+, C, H	89.0942	964.00	**1185.72**
600 x 850mm	1437	4904	900W	A, A+, C, H	89.0943	1227.00	**1509.21**
600 x 1040mm	1737	5927	1000W	A, A+, C, H	89.0944	1487.00	**1829.01**
600 x 1230mm	2034	6941	1200W	A, A+, C, H	89.0945	1739.00	**2138.97**

Witney Horizontal Aluminium Radiators - Matt Anthracite

Size H x W	Watts	BTU	Element Output	Element Type	Code	€ Ex VAT	€ Inc VAT
600 x 470mm	823	2809	300W	A, A+, C, H	89.0974	696.00	**856.08**
600 x 660mm	1132	3863	600W	A, A+, C, H	89.0975	964.00	**1185.72**
600 x 850mm	1437	4904	900W	A, A+, C, H	89.0976	1227.00	**1509.21**
600 x 1040mm	1737	5927	1000W	A, A+, C, H	89.0977	1487.00	**1829.01**
600 x 1230mm	2034	6941	1200W	A, A+, C, H	89.0978	1739.00	**2138.97**

Prices include radiator and wall fixing sets, valves and accessories extra.

FEATURES

- Excellent heat conductivity and lightweight
- Only requires a low water volume
- Heats up very quickly
- Radiators come with cover caps on top and bottom, same as radiator colour
- Tested to BS EN 442 standards
- 5 Year Manufacturer's Warranty*
- Can be single or dual fuel, or all electric

* With conditions

Technical Tables & Drawings
Page 798-799

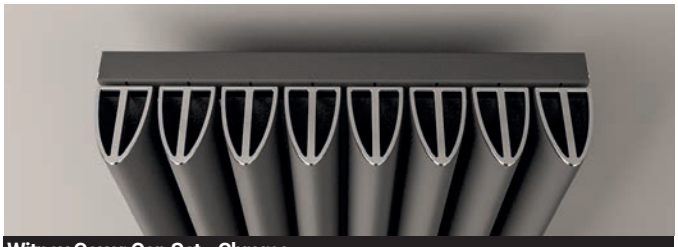

Witney Cover Cap Set - Chrome

Description	Code	€ Ex VAT	€ Inc VAT
Cover Cap 470mm	89.0421	61.00	**75.03**
Cover Cap 660mm	89.1407	80.00	**98.40**
Cover Cap 850mm	89.1408	98.00	**120.54**
Cover Cap 1040mm	89.1409	121.00	**148.83**
Cover Cap 1230mm	89.1410	143.00	**175.89**

Cover cap set only includes cover caps for the top or bottom of the radiator.

For element types see pages 718-729.

Element can only be installed horizontally on the bottom header. Radiators that are electric only are restricted to the heat output of the elements (Type C up to 900 watts).



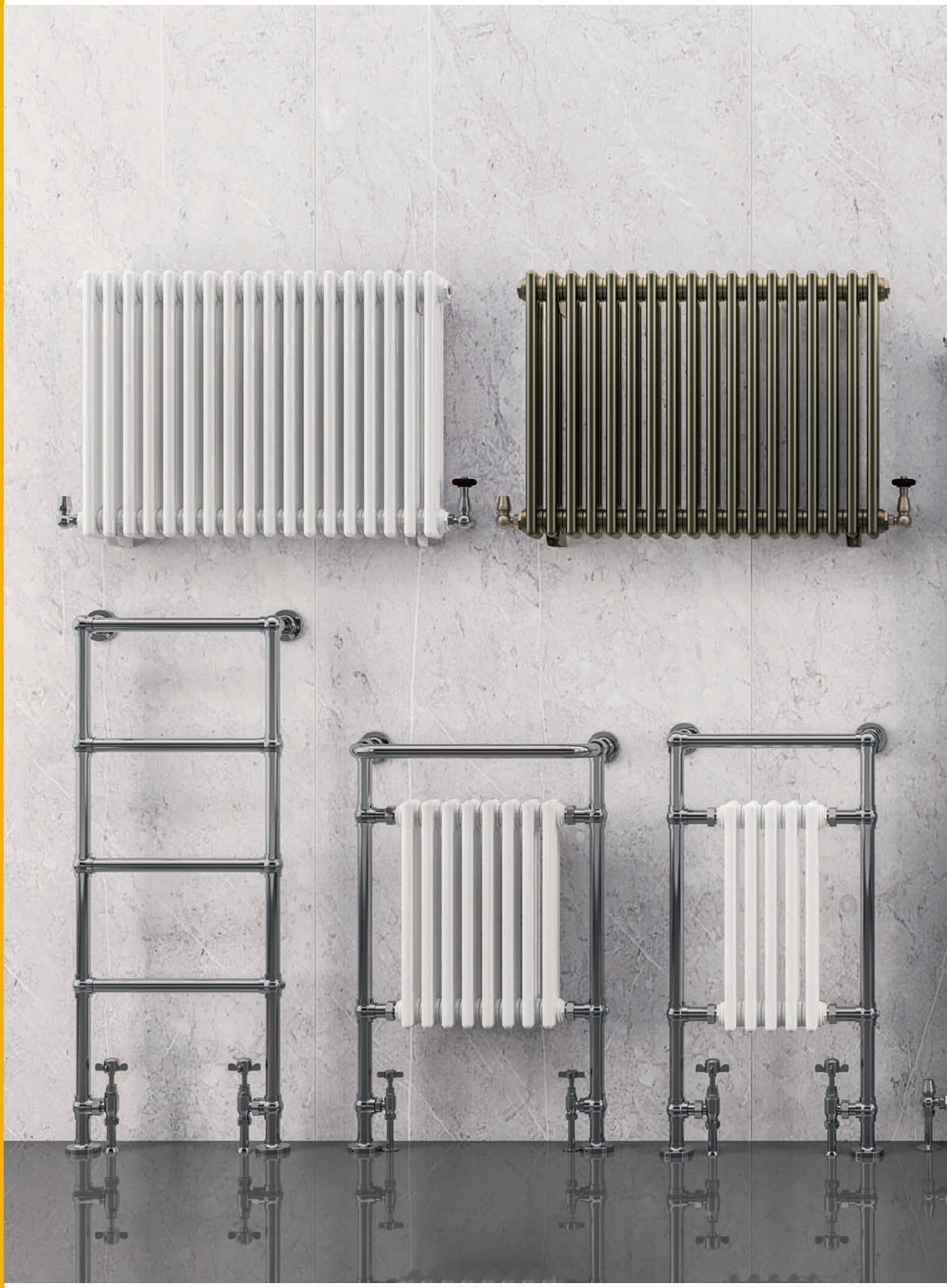

Sub Section

Traditional Range

Our traditional range of radiators offer character and flair to ensure they fit in with your classic designs. Most of these radiators can be powered via dual fuel, single fuel and / or all electric.



Contents

Windrush, Chrome	690
Stour, Available in 5 colours - **NEW COLOURS**	691-693
Painswick, Chrome	694
Frome, Chrome	694
Sherbourne, Chrome	695
Avon, Available in 3 colours - **NEW COLOURS & NEW SIZES**	696
Isbourne, Available in 3 colours - **NEW COLOUR**	697
Imperia 2 Column, Available in 3 colours - **NEW COLOUR & NEW SIZES**	698-700
Imperia 3 Column, Available in 3 colours - **NEW COLOUR & NEW SIZES**	701-703
Rivassa 2 Column, Available in 5 colours - **NEW COLOUR**	704-707
Rivassa 3 Column, Available in 5 colours - **NEW COLOUR**	708-711
Rivassa 4 Column, Available in 3 colours - **NEW COLOUR**	712-713
Leadon, Chrome / Gloss White	714
Thames, Chrome / Gloss White	714
Coln, Chrome / Gloss White	715
Twyver, Chrome / Gloss White	715

Traditional Range

WINDRUSH

Pictured 41.1009 Chrome



Pictured 41.1016 Chrome



Pictured 41.1014 Chrome



Our traditional range of radiators offer character and flair to ensure they fit in with your classic designs. The Windrush is a simple, traditional design that will add a vintage feel to your bathroom.

Windrush - Chrome

Size H x W x D	Watts	BTU	Element Output	Element Type	Code	€ Ex VAT	€ Inc VAT
950 x 500 x 130mm	147	502	100W	A, A+	41.1009	430.00	**528.90**
950 x 600 x 130mm	163	556	100W	A, A+	41.1003	460.00	**565.80**
1195 x 500 x 130mm	236	805	150W	A, A+, E	41.1014	465.00	**571.95**
1195 x 600 x 130mm	258	880	150W	A, A+, E	41.1015	492.00	**605.16**
1550 x 500 x 130mm	290	989	150W	A, A+, E	41.1016	563.00	**692.49**
1550 x 600 x 130mm	322	1099	150W	A, A+, E	41.1017	588.00	**723.24**

FEATURES

- Can be single, dual fuel or all electric
- Tested to BS EN 442 standards
- 5 Year Manufacturer's Warranty*

* With conditions

TECHNICAL INFORMATION

All measurements in Height by Width. Heat output based on ▲T60˚C. Radiators that are electric only are restricted to the heat output of the elements. Element size can be increased to full capacity of rail if using element type E. For element types see pages 718-729. For matching valves see pages 731-737. For indirect heating systems only. Tappings are approx. 130mm less than the width of the rail (144mm for 41.1009) and approx. 105mm off the wall. Price includes radiator and wall fixing sets, valves extra.

Traditional Range

Including new colours

STOUR

Pictured 41.1018 Chrome



Pictured 41.1020 Chrome



Pictured 41.1018 Chrome



Pictured 41.1010 Chrome



Our traditional range of radiators offer character and flair to ensure they fit in with your classic designs. The Stour in chrome finish offers a Victorian feel to complement a traditional bathroom.

FEATURES

- Can be single, dual fuel or all electric
- Tested to BS EN 442 standards
- 5 Year Manufacturer's Warranty*

* With conditions

Stour - Chrome

Size H x W	Watts	BTU	Element Output	Element Type	Code	€ Ex VAT	€ Inc VAT
690 x 500mm	125	428	150W	E	41.1010	322.00	**396.06**
690 x 600mm	177	604	100W	A, A+, E	41.1005	353.00	**434.19**
1195 x 500mm	209	714	100W	A, A+, E	41.1018	509.00	**626.07**
1195 x 600mm	232	791	150W	A, A+, E	41.1019	534.00	**656.82**
1550 x 500mm	260	888	150W	A, A+, E	41.1020	600.00	**738.00**
1550 x 600mm	287	980	150W	A, A+, E	41.1021	639.00	**785.97**

TECHNICAL INFORMATION

All measurements in Height by Width. Heat output based on ▲T60˚C. Radiators that are electric only are restricted to the heat output of the elements. Element size can be increased to full capacity of rail if using element type E. For element types see pages 718-729. For matching valves see pages 731-737. For indirect heating systems only. Tappings are approx. 74mm less than the width of the rail and approx. 53mm off the wall. Price includes radiator and wall fixing sets, valves extra.

Traditional Range

STOUR

Including new colours



Pictured 41.0380 Brushed Brass



Pictured 41.0435 Matt White

Technical Tables & Drawings
Page 798-799

Our traditional range of radiators offer character and flair to ensure they fit in with your classic designs. The Stour in new colours, brushed brass and matt white offers a Victorian feel to complement a traditional bathroom.

FEATURES
- Can be single, dual fuel or all electric
- Tested to BS EN 442 standards
- 5 Year Manufacturer's Warranty*

* With conditions

Stour - Brushed Brass — *New Colour*

Size H x W	Watts	BTU	Element Output	Element Type	Code	€ Ex VAT	€ Inc VAT
690 x 500mm*	125	428	150W	E	41.0377	497.00	**611.31**
690 x 600mm*	177	604	100W	A, A+, E	41.0378	537.00	**660.51**
1195 x 500mm*	209	714	100W	A, A+, E	41.0379	791.00	**972.93**
1195 x 600mm*	232	791	150W	A, A+, E	41.0380	835.00	**1027.05**
1550 x 500mm*	260	888	150W	A, A+, E	41.0381	975.00	**1199.25**
1550 x 600mm*	287	980	150W	A, A+, E	41.0382	1042.00	**1281.66**

*Available February 2023

Stour - Matt White — *New Colour*

Size H x W	Watts	BTU	Element Output	Element Type	Code	€ Ex VAT	€ Inc VAT
690 x 500mm*	221	753	100W	A, A+, E	41.0431	276.00	**339.48**
690 x 600mm*	240	820	100W	A, A+, E	41.0432	296.00	**364.08**
1195 x 500mm*	287	979	100W	A, A+, E	41.0433	443.00	**544.89**
1195 x 600mm*	386	1318	150W	A, A+, E	41.0434	472.00	**580.56**
1550 x 500mm*	366	1248	150W	A, A+, E	41.0435	485.00	**596.55**
1550 x 600mm*	398	1359	150W	A, A+, E	41.0436	527.00	**648.21**

*Available February 2023

TECHNICAL INFORMATION

All measurements in Height by Width. Heat output based on ▲T60˚C. Radiators that are electric only are restricted to the heat output of the elements. Element size can be increased to full capacity of rail if using element type E. For element types see pages 718-729. For matching valves see pages 731-737. For indirect heating systems only. Tappings are approx. 74mm less than the width of the rail and approx. 53mm off the wall. Price includes radiator and wall fixing sets, valves extra.

Warranty 5 Year | Heating | All Electric | Dual-Fuel

Traditional Range

Including new colours

STOUR



Pictured 41.0437 Matt Anthracite



Pictured 41.0445 Matt Black

Technical Tables & Drawings
Page 798-799

Our traditional range of radiators offer character and flair to ensure they fit in with your classic designs. The Stour in new colours, matt anthracite and matt black offers a Victorian feel to complement a traditional bathroom.

FEATURES
- Can be single, dual fuel or all electric
- Tested to BS EN 442 standards
- 5 Year Manufacturer's Warranty*

* With conditions

Stour - Matt Anthracite — *New Colour*

Size H x W	Watts	BTU	Element Output	Element Type	Code	€ Ex VAT	€ Inc VAT
690 x 500mm*	221	753	100W	A, A+, E	41.0437	276.00	**339.48**
690 x 600mm*	240	820	100W	A, A+, E	41.0438	296.00	**364.08**
1195 x 500mm*	287	979	100W	A, A+, E	41.0439	443.00	**544.89**
1195 x 600mm*	386	1318	150W	A, A+, E	41.0440	472.00	**580.56**
1550 x 500mm*	366	1248	150W	A, A+, E	41.0441	485.00	**596.55**
1550 x 600mm*	398	1359	150W	A, A+, E	41.0442	527.00	**648.21**

*Available February 2023

Stour - Matt Black — *New Colour*

Size H x W	Watts	BTU	Element Output	Element Type	Code	€ Ex VAT	€ Inc VAT
690 x 500mm*	221	753	100W	A, A+, E	41.0443	276.00	**339.48**
690 x 600mm*	240	820	100W	A, A+, E	41.0444	296.00	**364.08**
1195 x 500mm*	287	979	100W	A, A+, E	41.0445	443.00	**544.89**
1195 x 600mm*	386	1318	150W	A, A+, E	41.0446	472.00	**580.56**
1550 x 500mm*	366	1248	150W	A, A+, E	41.0447	485.00	**596.55**
1550 x 600mm*	398	1359	150W	A, A+, E	41.0448	527.00	**648.21**

*Available February 2023

TECHNICAL INFORMATION

All measurements in Height by Width. Heat output based on ▲T60˚C. Radiators that are electric only are restricted to the heat output of the elements. Element size can be increased to full capacity of rail if using element type E. For element types see pages 718-729. For matching valves see pages 731-737. For indirect heating systems only. Tappings are approx. 74mm less than the width of the rail and approx. 53mm off the wall. Price includes radiator and wall fixing sets, valves extra.

Warranty 5 Year | Heating | All Electric | Dual-Fuel

Traditional Range

PAINSWICK



Our traditional range of radiators offer character and flair to ensure they fit in with your classic designs. The Painswick is a stunning classical radiator with elegant practical curves.

Painswick - Chrome

Size H x W	Watts	BTU	Element Output	Element Type	Code	€ Ex VAT	€ Inc VAT
778 x 686mm	356	1215	N/A	N/A	41.1022	1146.00	**1409.58**

Tappings are approx. 130mm less than the width of the rail and approx. 105mm off the wall.

FEATURES
- Tested to BS EN 442 standards
- 5 Year Manufacturer's Warranty*
- Not suitable for elements

* With conditions

Technical Tables & Drawings
Page 800-801

TECHNICAL INFORMATION

All measurements in Height by Width. Heat output based on ▲T60˚C. For matching valves see pages 731-737. For indirect heating systems only. Tappings are approx. 130mm less than the width of the rail and approx. 100mm off the floor. Price includes radiator and wall fixing sets, valves extra.

Warranty 5

Heating



Pair of Radiator Valves & Tails

Code	€ Ex VAT	€ Inc VAT
54.0001	72.00	**88.56**

Radiator valves sold separately

FROME



Our traditional range of radiators offer character and flair to ensure they fit in with your classic designs. These rails only be used on closed or indirect heating circuits, not on fresh water hot systems as they are of steel construction.

Frome - Chrome

Size H x W	Watts	BTU	Element Output	Element Type	Code	€ Ex VAT	€ Inc VAT
940 x 474mm	314	1071	150W	A, A+, C, E, H	41.1013	588.00	**723.24**

Tappings are approx. 130mm less than the width of the rail and approx. 105mm off the wall.

FEATURES
- Tested to BS EN 442 standards.
- 5 Year Manufacturer's Warranty*
- Can be single or dual fuel, or all electric

* With conditions

Technical Tables & Drawings
Page 800-801

TECHNICAL INFORMATION

All measurements in Height by Width. Heat output based on ▲T60˚C. Radiators that are electric only are restricted to the heat output of the elements. Element size can be increased to full capacity of rail if using element type C, E or H. For element types see pages 718-729. For matching valves see pages 731-737. For indirect heating systems. Prices include radiator and wall fixings sets, valves extra.

Warranty 5 Year

Heating

All Electric

Dual-Fuel



Pair of Radiator Valves & Tails

Code	€ Ex VAT	€ Inc VAT
54.0001	72.00	**88.56**

Radiator valves sold separately

Traditional Range

SHERBOURNE



Our traditional range of radiators offer character and flair to ensure they fit in with your classic designs. These rails only be used on closed or indirect heating circuits, not on fresh water hot systems as they are of steel construction.

Sherbourne - Chrome

Size H x W x D	Watts	BTU	Element Output	Element Type	Code	€ Ex VAT	€ Inc VAT
940 x 600 x 142mm	226	771	150W	A, A+, C, E, H	41.1001	558.00	**686.34**

Tappings are approx. 130mm less than the width of the rail and approx. 105mm off the wall.

FEATURES
- Tested to BS EN 442 standards.
- 5 Year Manufacturer's Warranty*
- Can be single or dual fuel, or all electric

* With conditions

Technical Tables & Drawings
Page 800-801

TECHNICAL INFORMATION

All measurements in Height by Width. Heat output based on ▲T60˚C. Radiators that are electric only are restricted to the heat output of the elements. Element size can be increased to full capacity of rail if using element type C, E or H. For element types see pages 718-729. For matching valves see pages 731-737. For indirect heating systems. Prices include radiator and wall fixings sets, valves extra.

Warranty 5 Year

Heating

All Electric

Dual-Fuel



Pair of Radiator Valves & Tails

Code	€ Ex VAT	€ Inc VAT
54.0001	72.00	**88.56**

Radiator valves sold separately

CLEARANCE ITEM — AMPNEY



Our traditional range of radiators offer character and flair to ensure they fit in with your classic designs. These rails only be used on closed or indirect heating circuits, not on fresh water hot systems as they are of steel construction.

Ampney - Chrome — **CLEARANCE ITEM**

Size H x W	Watts	BTU	Element Output	Element Type	Code	€ Ex VAT	€ Inc VAT
940 x 674mm*	423	1443	150W	A, A+, C, E, H	41.1012	483.00	**594.09**

Tappings are approx. 130mm less than the width of the rail and approx. 105mm off the wall.

* While stocks last.

FEATURES
- Tested to BS EN 442 standards.
- 5 Year Manufacturer's Warranty*
- Can be single or dual fuel, or all electric

* With conditions

TECHNICAL INFORMATION

All measurements in Height by Width. Heat output based on ▲T60˚C. Radiators that are electric only are restricted to the heat output of the elements. Element size can be increased to full capacity of rail if using element type C, E or H. For element types see pages 718-729. For matching valves see pages 731-737. For indirect heating systems. Prices include radiator and wall fixings sets, valves extra.

Warranty 5 Year

Heating

All Electric

Dual-Fuel



Pair of Radiator Valves & Tails

Code	€ Ex VAT	€ Inc VAT
54.0001	72.00	**88.56**

Radiator valves sold separately

Traditional Range

AVON

Including new size & new colours

For element types see pages 718-729.



Pictured 41.1006 Chrome / Gloss White



Pictured 41.1028 Chrome / Matt Anthracite

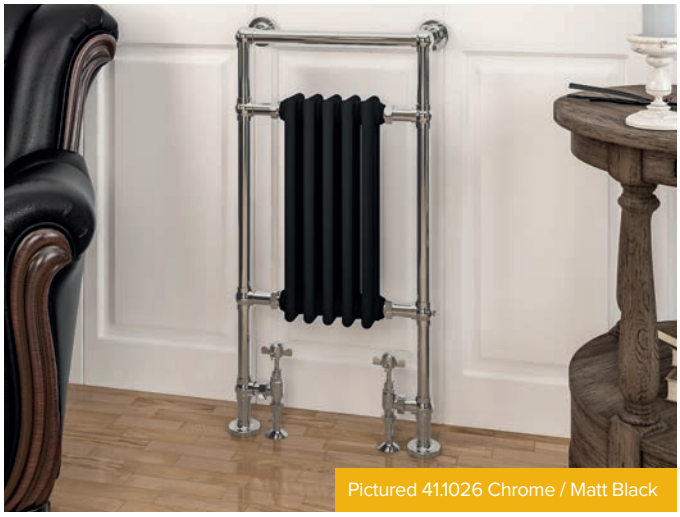

Pictured 41.1026 Chrome / Matt Black

Our traditional range of radiators offer character and flair to ensure they fit in with your classic designs. These rails only be used on closed or indirect heating circuits, not on fresh water hot systems as they are of steel construction.

Avon - Chrome / Gloss White — *New Size*

Size H x W x D	Watts	BTU	Element Output	Element Type	Code	€ Ex VAT	€ Inc VAT
960 x 429 x 185mm	450	1535	150W	A, A+, C, E, H	41.1027	513.00	**630.99**
960 x 500 x 185mm	530	1808	300W	A, A+, C, E, H	41.1006	544.00	**669.12**

Avon - Chrome / Matt Anthracite — *New Colour*

Size H x W x D	Watts	BTU	Element Output	Element Type	Code	€ Ex VAT	€ Inc VAT
960 x 429 x 185mm	450	1535	150W	A, A+, C, E, H	41.1028	513.00	**630.99**
960 x 500 x 185mm	530	1808	300W	A, A+, C, E, H	41.1025	544.00	**669.12**

Avon - Chrome / Matt Black — *New Colour*

Size H x W x D	Watts	BTU	Element Output	Element Type	Code	€ Ex VAT	€ Inc VAT
960 x 429 x 185mm	450	1535	150W	A, A+, C, E, H	41.1029	513.00	**630.99**
960 x 500 x 185mm	530	1808	300W	A, A+, C, E, H	41.1026	544.00	**669.12**

Tappings are approx. 130mm less than the width of the rail and approx. 135mm off the wall.

FEATURES
- Tested to BS EN 442 standards
- 5 Year Manufacturer's Warranty*
- Can be single or dual fuel, or all electric

* With conditions

Technical Tables & Drawings
Page 800-801

Warranty 5 Year | Heating | All Electric | Dual-Fuel



Pair of Radiator Valves & Tails

Code	€ Ex VAT	€ Inc VAT
54.0001	72.00	**88.56**

Radiator valves sold separately

COMPLETE THE LOOK

Angle TRV with Lockshield 15mm (pair) Chrome

Code	€ Ex VAT	€ Inc VAT
54.0008	119.00	**146.37**



TECHNICAL INFORMATION

All measurements in Height by Width. Heat output based on ▲T60˚C. Radiators that are electric only are restricted to the heat output of the elements. Element size can be increased to full capacity of rail if using element type C, E or H. For element types see pages 718-729. For matching valves see pages 731-737. For indirect heating systems. Prices include radiator and wall fixings sets, valves extra.

Traditional Range

Including new colour

ISBOURNE

For element types see pages 718-729.



Pictured 41.1000 Chrome / Gloss White

For element types see pages 718-729.



Pictured 41.1023 Chrome / Matt Black

Our traditional range of radiators offer character and flair to ensure they fit in with your classic designs. These rails only be used on closed or indirect heating circuits, not on fresh water hot systems as they are of steel construction.

Isbourne - Chrome / Gloss White

Size H x W	Watts	BTU	Element Output	Element Type	Code	€ Ex VAT	€ Inc VAT
940 x 600 x 260mm	894	3050	450W	A, A+, C, H	41.1000	635.00	**781.05**

Isbourne - Chrome / Matt Anthracite *New Colour*

Size H x W	Watts	BTU	Element Output	Element Type	Code	€ Ex VAT	€ Inc VAT
940 x 600 x 260mm	894	3050	450W	A, A+, C, H	41.1024	635.00	**781.05**

Isbourne - Chrome / Matt Black

Size H x W	Watts	BTU	Element Output	Element Type	Code	€ Ex VAT	€ Inc VAT
940 x 600 x 260mm	894	3050	450W	A, A+, C, H	41.1023	635.00	**781.05**

Tappings are approx. 130mm less than the width of the rail and approx. 121mm off the wall.

FEATURES

- Tested to BS EN 442 standards
- 5 Year Manufacturer's Warranty*
- Can be single or dual fuel, or all electric

* With conditions

TECHNICAL INFORMATION

All measurements in Height by Width. Heat output based on ▲T60˚C. Radiators that are electric only are restricted to the heat output of the elements. Element size can be increased to full capacity of rail if using element type C or H. For element types see pages 718-729. For matching valves see pages 731-737. For indirect heating systems. Prices include radiator and wall fixings sets, valves extra..

Warranty 5 Year | Heating | All Electric | Dual-Fuel

Technical Tables & Drawings
Page 800-801

COMPLETE THE LOOK



Angle TRV with Lockshield 15mm (pair) Chrome

Code	€ Ex VAT	€ Inc VAT
54.0008	119.00	**146.37**

Traditional TRVs
Page 733



Traditional Range

IMPERIA 2 COLUMN

Including new sizes



Pictured 41.0345 Matt Anthracite

Traditional TRVs
Page 733



Pictured 41.0342 Matt Anthracite with 41.0358 feet



Dual Fuel installation

Pictured 41.0339 Gloss White with 8.560 Type H Wi-Fi element, 54.0007 TRV, 8.901 T piece and 41.3003 elbow

A traditional rail which will give a Victorian touch of authenticity to any room but will also create an elegant look to a contemporary interior. This radiator boasts high outputs to ensure the whole room is warm. Comes with the option of traditional legs and in gloss white, matt anthracite or bare metal finishes. Also available in three columns.

FEATURES
- Tested to BS EN 442 standards
- 5 Year Manufacturer's Warranty*
- Matching colour wall fixing sets
- Radiator feet option available to get the classic look
- Material thickness 1.5mm
- Doesn't require flow diverter

* With conditions

Technical Tables & Drawings
Page 802-803

Warranty 5 Year

Heating

All Electric

Dual-Fuel

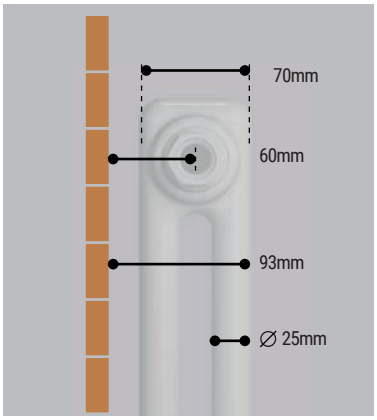

Traditional Range

Including new sizes

IMPERIA 2 COLUMN

Imperia Two Column Radiators - Gloss White — New Sizes

Size H x W	Watts	BTU	Element Output	Element Type	Code	€ Ex VAT	€ Inc VAT
300 x 1145mm**	875	2985	450W	A, A+, C, E*, H	41.0383	384.00	**472.32**
300 x 1370mm**	1048	3573	450W	A, A+, C, E*, H	41.0384	453.00	**557.19**
600 x 425mm**	576	1965	300W	A, A+, C, H	41.0385	210.00	**258.30**
600 x 470mm**	639	2180	300W	A, A+, C, H	41.0386	229.00	**281.67**
600 x 515mm**	704	2402	300W	A, A+, C, H	41.0387	247.00	**303.81**
600 x 560mm**	767	2617	300W	A, A+, C, H	41.0388	266.00	**472.32**
600 x 605mm	826	2818	450W	A, A+, C, H	41.0339	314.00	**386.22**
600 x 830mm	1143	3900	600W	A, A+, C, E*, H	41.0338	413.00	**507.99**
600 x 1010mm**	1407	4800	750W	A, A+, C, H	41.0389	450.00	**553.50**
600 x 1145mm	1588	5418	900W	A, A+, H	41.0337	553.00	**680.19**
600 x 1460mm**	2046	6980	1000W	A+	41.0390	635.00	**781.05**
1800 x 290mm**	1078	3678	N/A	N/A	41.0391	303.00	**372.69**
1800 x 380mm	1190	4059	N/A	N/A	41.0341	394.00	**484.62**
1800 x 470mm	1487	5074	N/A	N/A	41.0340	475.00	**584.25**

*600w Type E Element can be fitted **Available February 2023

Imperia Two Column Radiators - Matt Anthracite — New Sizes

Size H x W	Watts	BTU	Element Output	Element Type	Code	€ Ex VAT	€ Inc VAT
300 x 1145mm**	875	2985	450W	A, A+, C, E*, H	41.0392	384.00	**472.32**
300 x 1370mm**	1048	3573	450W	A, A+, C, E*, H	41.0393	453.00	**557.19**
600 x 425mm**	576	1965	300W	A, A+, C, H	41.0394	210.00	**258.30**
600 x 470mm**	639	2180	300W	A, A+, C, H	41.0395	229.00	**281.67**
600 x 515mm**	704	2402	300W	A, A+, C, H	41.0396	247.00	**303.81**
600 x 560mm**	767	2617	300W	A, A+, C, H	41.0397	266.00	**327.18**
600 x 605mm	826	2818	450W	A, A+, C, H	41.0344	314.00	**386.22**
600 x 830mm	1143	3900	600W	A, A+, C, E*, H	41.0343	413.00	**507.99**
600 x 1010mm**	1407	4800	750W	A, A+, C, H	41.0398	450.00	**553.50**
600 x 1145mm	1588	5418	900W	A, A+, H	41.0342	553.00	**680.19**
600 x 1460mm**	2046	6980	1000W	A+	41.0399	635.00	**781.05**
1800 x 290mm**	1078	3678	N/A	N/A	41.0400	303.00	**372.69**
1800 x 380mm	1190	4059	N/A	N/A	41.0346	394.00	**484.62**
1800 x 470mm	1487	5074	N/A	N/A	41.0345	475.00	**584.25**

*600w Type E Element can be fitted **Available February 2023

TECHNICAL INFORMATION

All measurements in Height by Width. Heat output based on ▲T60˚C. Radiators that are electric only are restricted to the heat output of the elements. Element size can be increased to full capacity of rail if using element type C, E or H. For element types see pages 718-729. For matching valves see pages 731-737. For indirect heating systems. Tappings are the width of the rail and 60mm off the wall. Prices include radiator and wall fixings sets, valves extra.



Pictured 41.0392 Matt Anthracite with 41.0358 feet



Imperia Radiator Feet

Description	Code	€ Ex VAT	€ Inc VAT
Imperia 2 Column Radiator Feet (pair) Gloss White	41.0357	47.00	**57.81**
Imperia 2 Column Radiator Feet (pair) Matt Anthracite	41.0358	47.00	**57.81**



Pictured 41.0337 Gloss White with Type A+ Element

Imperia Towel Hangers
Page 738



Robe Hooks
Page 738



Round Vent Caps
Page 741



Traditional Range

IMPERIA 2 COLUMN

Including new colour

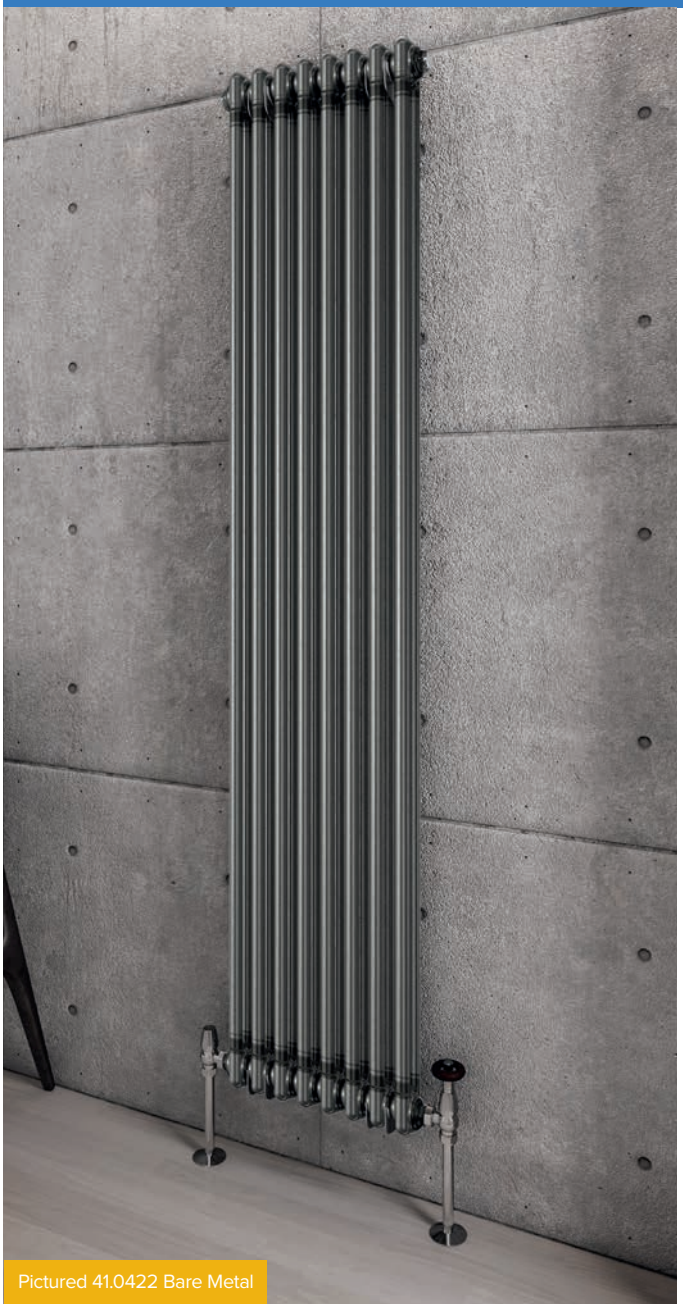
Pictured 41.0422 Bare Metal

Eastbrook is always on the look out for products and finishes trending in the UK market. We have noticed a trend in bare brick and plain painted walls with traditional engineering items such as small sand casts mounted on the wall. Known in designer circles as the Industrial Chic look.

For those of you looking for Bare metal finish radiator showing the welds, pressings, sanding and tubes that make up a traditional column radiator we have introduced this range. We have sealed the metal with clear lacquer to ensure no impurities are allow to discolour of oxidise the metal.

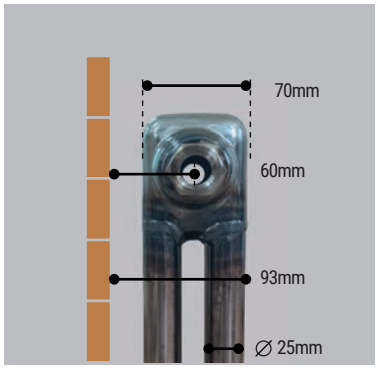

Warranty 5 Year

Heating

All Electric

Dual-Fuel

Imperia bare metal radiators are handfinished therefore each radiator will have its own unique welding marks and imperfections that are left on purpose. Bare Metal colour shown in images are subject to the limitations of the printing process and may appear different.

Traditional TRVs
Page 733




Pictured 41.0420 Bare Metal

FEATURES

- Tested to BS EN 442 standards
- 5 Year Manufacturer's Warranty*
- Matching colour wall fixing sets
- Radiator feet option available to get the classic look
- Material thickness 1.5mm
- Doesn't require flow diverter

* With conditions

Technical Tables & Drawings
Page 802-803

Imperia Two Column Radiators - Bare Metal *New Colour*

Size H x W	Watts	BTU	Element Output	Element Type	Code	€ Ex VAT	€ Inc VAT
600 x 605mm**	826	2818	450W	A, A+, C, H	41.0419	446.00	**548.58**
600 x 830mm**	1143	3900	600W	A, A+, C, E*, H	41.0420	591.00	**726.93**
600 x 1145mm**	1588	5418	900W	A, A+, H	41.0421	793.00	**975.39**
1800 x 380mm**	1190	4059	N/A	N/A	41.0422	594.00	**730.62**
1800 x 470mm**	1487	5074	N/A	N/A	41.0423	709.00	**872.07**

*600w Type E Element can be fitted **Available February 2023

TECHNICAL INFORMATION

All measurements in Height by Width. Heat output based on ▲T60˚C. Radiators that are electric only are restricted to the heat output of the elements. Element size can be increased to full capacity of rail if using element type C, E or H. For element types see pages 718-729. For matching valves see pages 731-737. For indirect heating systems. Tappings are the width of the rail and 60mm off the wall. Prices include radiator and wall fixings sets, valves extra.

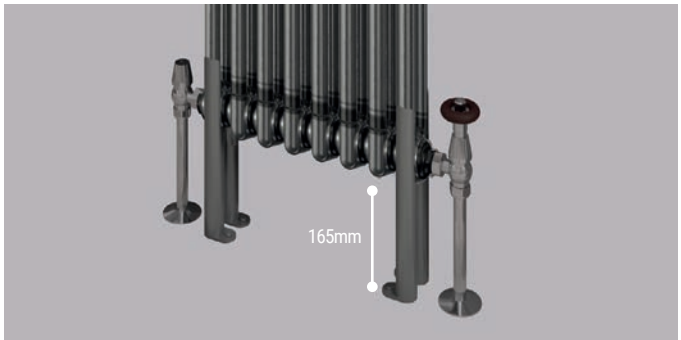

Imperia Radiator Feet *New Colour*

Description	Code	€ Ex VAT	€ Inc VAT
Imperia 2 Column Radiator Feet (pair)	41.0429	59.00	**72.57**

Traditional Range

Including new colour

IMPERIA 3 COLUMN



Pictured 41.0428 Bare Metal

Imperia bare metal radiators are handfinished therefore each radiator will have its own unique welding marks and imperfections that are left on purpose. Bare Metal colour shown in images are subject to the limitations of the printing process and may appear different.

Traditional TRVs
Page 733





Pictured 41.0424 Bare Metal

FEATURES

- Tested to BS EN 442 standards
- 5 Year Manufacturer's Warranty*
- Matching colour wall fixing sets
- Radiator feet option available to get the classic look
- Material thickness 1.5mm
- Doesn't require flow diverter

* With conditions

Technical Tables & Drawings
Page 802-803

Imperia Three Column Radiators - Bare Metal							New Colour
Size H x W	Watts	BTU	Element Output	Element Type	Code	€ Ex VAT	€ Inc VAT
600 x 605mm**	1081	3688	600W	A, A+, C, H	41.0424	524.00	**644.52**
600 x 830mm**	1498	5110	900W	A+, C, H	41.0425	696.00	**856.08**
600 x 1145mm**	2362	8059	1200W	A, A+, H	41.0426	936.00	**1151.28**
1800 x 380mm**	2099	7160	N/A	N/A	41.0427	716.00	**880.68**
1800 x 470mm**	2623	8950	N/A	N/A	41.0428	854.00	**1050.42**

**Available February 2023

Eastbrook is always on the look out for products and finishes trending in the UK market. We have noticed a trend in bare brick and plain painted walls with traditional engineering items such as small sand casts mounted on the wall. Known in designer circles as the Industrial Chic look.

For those of you looking for Bare metal finish radiator showing the welds, pressings, sanding and tubes that make up a traditional column radiator we have introduced this range. We have sealed the metal with clear lacquer to ensure no impurities are allow to discolour of oxidise the metal.

TECHNICAL INFORMATION

All measurements in Height by Width. Heat output based on ▲T60˚C. Radiators that are electric only are restricted to the heat output of the elements. Element size can be increased to full capacity of rail if using element type C, E or H. For element types see pages 718-729. For matching valves see pages 731-737. For indirect heating systems. Tappings are the width of the rail and 60mm off the wall. Prices include radiator and wall fixings sets, valves extra.

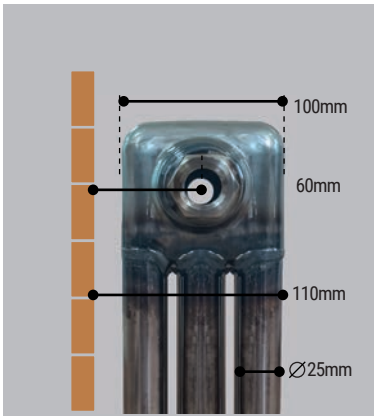

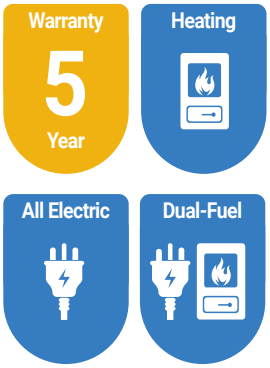

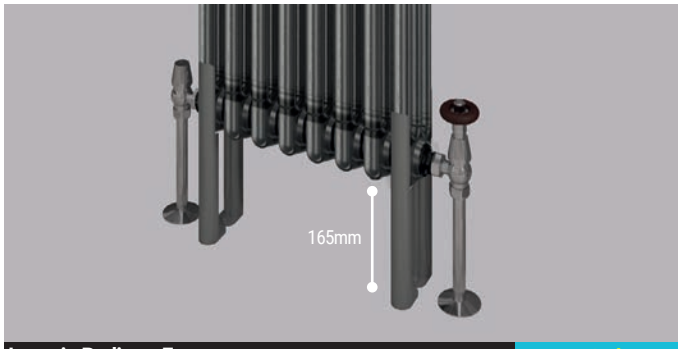

Imperia Radiator Feet			New Colour
Description	Code	€ Ex VAT	€ Inc VAT
Imperia 3 Column Radiator Feet (pair)	41.0430	65.00	**79.95**

Traditional Range

IMPERIA 3 COLUMN

Including new sizes



Pictured 41.0351 Gloss White with 41.0359 feet



Pictured 41.0353 Matt Anthracite

Traditional TRVs
Page 733



Pictured 41.0347 Gloss White

A traditional rail which will give a Victorian touch of authenticity to any room but will also create an elegant look to a contemporary interior. This radiator boasts high outputs to ensure the whole room is warm. Comes with the option of traditional legs and in gloss white, matt anthracite or bare metal finishes. Also available in two columns.

FEATURES

- Tested to BS EN 442 standards
- 5 Year Manufacturer's Warranty*
- Matching colour wall fixing sets
- Radiator feet option available to get the classic look
- Material thickness 1.5mm
- Doesn't require flow diverter

* With conditions

Technical Tables & Drawings
Page 802-803



Warranty 5 Year

Heating

All Electric

Dual-Fuel

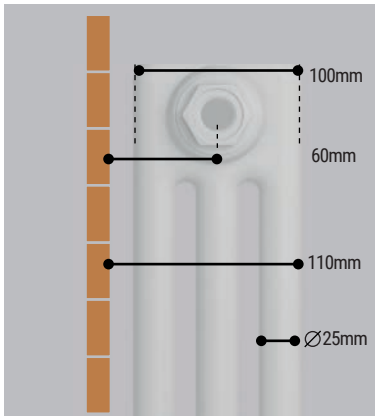

Traditional Range

Including new sizes

IMPERIA 3 COLUMN

Imperia Three Column Radiators - Gloss White — New Sizes

Size H x W	Watts	BTU	Element Output	Element Type	Code	€ Ex VAT	€ Inc VAT
300 x 1145mm**	1278	4360	600W	A, A+, C, E*, H	41.0401	444.00	**546.12**
300 x 1370mm**	1436	4896	750W	A, A+, C, E*, H	41.0402	524.00	**644.52**
600 x 425mm**	850	2900	450W	A, A+	41.0403	250.00	**307.50**
600 x 470mm**	945	3224	450W	A, A+, C, H	41.0404	271.00	**333.33**
600 x 515mm**	1040	3548	450W	A, A+, C, H	41.0405	292.00	**359.16**
600 x 560mm**	1134	3869	600W	A+, C, H	41.0406	315.00	**387.45**
600 x 605mm	1081	3688	600W	A, A+, C, H	41.0349	367.00	**451.41**
600 x 830mm	1498	5110	900W	A+, C, H	41.0348	485.00	**596.55**
600 x 1010mm**	2079	7093	1000W	A, A+, C, H	41.0407	534.00	**656.82**
600 x 1145mm	2362	8059	1200W	A, A+, H	41.0347	653.00	**803.19**
600 x 1460mm**	3024	10317	1200W	A+, H	41.0408	754.00	**927.42**
1800 x 290mm**	1608	5486	N/A	N/A	41.0409	367.00	**451.41**
1800 x 380mm	2099	7160	N/A	N/A	41.0351	475.00	**584.25**
1800 x 470mm	2623	8950	N/A	N/A	41.0350	570.00	**701.10**

*600w Type E Element can be fitted **Available February 2023

Imperia Three Column Radiators - Matt Anthracite — New Sizes

Size H x W	Watts	BTU	Element Output	Element Type	Code	€ Ex VAT	€ Inc VAT
300 x 1145mm**	1278	4360	600W	A, A+, C, E*, H	41.0410	444.00	**546.12**
300 x 1370mm**	1436	4896	750W	A, A+, C, E*, H	41.0411	524.00	**644.52**
600 x 425mm**	850	2900	450W	A, A+	41.0412	250.00	**307.50**
600 x 470mm**	945	3224	450W	A, A+, C, H	41.0413	271.00	**333.33**
600 x 515mm**	1040	3548	450W	A, A+, C, H	41.0414	292.00	**359.16**
600 x 560mm**	1134	3869	600W	A+, C, H	41.0415	315.00	**387.45**
600 x 605mm	1081	3688	600W	A, A+, C, H	41.0354	367.00	**451.41**
600 x 830mm	1498	5110	900W	A+, C, H	41.0353	485.00	**596.55**
600 x 1010mm**	2079	7093	1000W	A, A+, C, H	41.0416	534.00	**656.82**
600 x 1145mm	2362	8059	1200W	A, A+, H	41.0352	653.00	**803.19**
600 x 1460mm**	3024	10317	1200W	A+, H	41.0417	754.00	**927.42**
1800 x 290mm**	1608	5486	N/A	N/A	41.0418	367.00	**451.41**
1800 x 380mm	2099	7160	N/A	N/A	41.0356	475.00	**584.25**
1800 x 470mm	2623	8950	N/A	N/A	41.0355	570.00	**701.10**

*600w Type E Element can be fitted **Available February 2023

TECHNICAL INFORMATION

All measurements in Height by Width. Heat output based on ▲T60˚C. Radiators that are electric only are restricted to the heat output of the elements. Element size can be increased to full capacity of rail if using element type C, E or H. For element types see pages 718-729. For matching valves see pages 731-737. For indirect heating systems. Tappings are the width of the rail and 60mm off the wall. Prices include radiator and wall fixings sets, valves extra.



Pictured 41.0411 Matt Anthracite



Imperia Radiator Feet

Description	Code	€ Ex VAT	€ Inc VAT
Imperia 3 Column Radiator Feet (pair) Gloss White	41.0359	51.00	**62.73**
Imperia 3 Column Radiator Feet (pair) Matt Anthracite	41.0360	51.00	**62.73**



Pictured 41.0354 Matt Anthracite with Type A+ Element

Imperia Towel Hangers
Page 738



Robe Hooks
Page 738



Round Vent Caps
Page 741

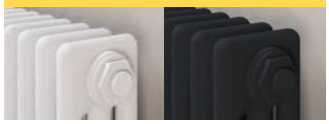

Traditional Range

RIVASSA 2 COLUMN

Including new colour



Pictured 81.0003 Gloss White



Traditional TRVs
Page 733

Pictured 81.0025 Matt Anthracite



Pictured 81.0008 Gloss White with 81.0034 Feet and 8.541 Type H element

A traditional rail which will give a Victorian touch of authenticity to any room but will also create an elegant look to a contemporary interior. This radiator boasts high outputs to ensure the whole room is warm. Comes with the option of traditional legs and in gloss white, matt anthracite or matt black finishes. Also available in three and four columns.

FEATURES
- Tested to BS EN 442 standards
- 5 Year Manufacturer's Warranty*
- Matching colour wall fixing sets
- 300mm height option for limited spaces
- Radiator feet option available to get the classic look
- Material thickness 1.5mm
- Doesn't require flow diverter

* With conditions

Technical Tables & Drawings
Page 804-805

Warranty 5 Year

Heating

All Electric

Dual-Fuel

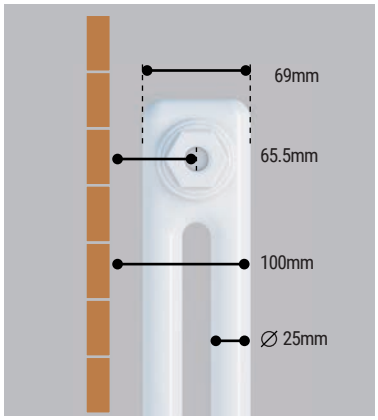

Traditional Range

Including new colour

RIVASSA 2 COLUMN

Rivassa Two Column Radiators - Gloss White

Size H x W	Watts	BTU	Element Output	Element Type	Code	€ Ex VAT	€ Inc VAT
300 x 1148mm	889	3034	450W	A, A+, C, E*, H	81.0005	621.00	**763.83**
300 x 1373mm	1067	3641	600W	A, A+, C, E*, H	81.0006	744.00	**915.12**
600 x 428mm	567	1933	300W	A, A+, C, H	81.0038	283.00	**348.09**
600 x 473mm	630	2148	300W	A, A+, C, H	81.0039	315.00	**387.45**
600 x 518mm	693	2362	300W	A, A+, C, H	81.0040	345.00	**424.35**
600 x 563mm	756	2577	450W	A, A+, C, H	81.0041	378.00	**464.94**
600 x 608mm	818	2792	450W	A, A+, C, H	81.0007	411.00	**505.53**
600 x 833mm	1133	3866	600W	A, A+, C, E*, H	81.0008	569.00	**699.87**
600 x 1010mm	1385	4727	750W	A, A+, C, H	81.0077	696.00	**856.08**
600 x 1148mm	1573	5369	900W	A, A+, H	81.0009	790.00	**971.70**
600 x 1460mm	2014	6874	1200W	A, A+, H	81.0078	1013.00	**1245.99**
1800 x 293mm	933	3185	N/A	N/A	81.0002	369.00	**453.87**
1800 x 383mm	1245	4247	N/A	N/A	81.0003	485.00	**596.55**
1800 x 473mm	1556	5308	N/A	N/A	81.0004	608.00	**747.84**

*600w Type E Element can be fitted

Rivassa Two Column Radiators - Matt Anthracite

Size H x W	Watts	BTU	Element Output	Element Type	Code	€ Ex VAT	€ Inc VAT
300 x 1148mm	889	3034	450W	A, A+, C, E*, H	81.0021	630.00	**774.90**
300 x 1373mm	1067	3641	600W	A, A+, C, E*, H	81.0022	758.00	**932.34**
600 x 428mm	567	1933	300W	A, A+, C, H	81.0046	289.00	**355.47**
600 x 473mm	630	2148	300W	A, A+, C, H	81.0047	320.00	**393.60**
600 x 518mm	693	2362	300W	A, A+, C, H	81.0048	345.00	**424.35**
600 x 563mm	756	2577	450W	A, A+, C, H	81.0049	384.00	**472.32**
600 x 608mm	818	2792	450W	A, A+, C, H	81.0023	422.00	**519.06**
600 x 833mm	1133	3866	600W	A, A+, C, E*, H	81.0024	580.00	**713.40**
600 x 1010mm	1385	4727	750W	A, A+, C, H	81.0090	713.00	**876.99**
600 x 1148mm	1573	5369	900W	A, A+, H	81.0025	805.00	**990.15**
600 x 1460mm	2014	6874	1200W	A, A+, H	81.0091	1032.00	**1269.36**
1800 x 293mm	933	3185	N/A	N/A	81.0018	378.00	**464.94**
1800 x 383mm	1245	4247	N/A	N/A	81.0019	493.00	**606.39**
1800 x 473mm	1556	5308	N/A	N/A	81.0020	621.00	**763.83**

*600w Type E Element can be fitted

Rivassa Two Column Radiators - Matt Black *New Colour*

Size H x W	Watts	BTU	Element Output	Element Type	Code	€ Ex VAT	€ Inc VAT
300 x 1148mm	889	3034	450W	A, A+, C, E*, H	81.0208	630.00	**774.90**
300 x 1373mm	1067	3641	600W	A, A+, C, E*, H	81.0209	758.00	**932.34**
600 x 428mm	567	1933	300W	A, A+, C, H	81.0210	289.00	**355.47**
600 x 473mm	630	2148	300W	A, A+, C, H	81.0211	320.00	**393.60**
600 x 518mm	693	2362	300W	A, A+, C, H	81.0212	345.00	**424.35**
600 x 563mm	756	2577	450W	A, A+, C, H	81.0213	384.00	**472.32**
600 x 608mm	818	2792	450W	A, A+, C, H	81.0214	422.00	**519.06**
600 x 833mm	1133	3866	600W	A, A+, C, E*, H	81.0215	580.00	**713.40**
600 x 1010mm	1385	4727	750W	A, A+, C, H	81.0216	713.00	**876.99**
600 x 1148mm	1573	5369	900W	A, A+, H	81.0217	805.00	**990.15**
600 x 1460mm	2014	6874	1200W	A, A+, H	81.0218	1032.00	**1269.36**
1800 x 293mm	933	3185	N/A	N/A	81.0219	378.00	**464.94**
1800 x 383mm	1245	4247	N/A	N/A	81.0220	493.00	**606.39**
1800 x 473mm	1556	5308	N/A	N/A	81.0221	621.00	**763.83**

*600w Type E Element can be fitted

TECHNICAL INFORMATION

All measurements in Height by Width. Heat output based on ▲T60˚C. Radiators that are electric only are restricted to the heat output of the elements. Element size can be increased to full capacity of rail if using element type C, E or H. For element types see pages 718-729. For matching valves see pages 731-737. For indirect heating systems. Tappings are the width of the rail and 65.5mm off the wall. Prices include radiator and wall fixings sets, valves extra.



Pictured 81.0208 Matt Black with 81.0222 Feet

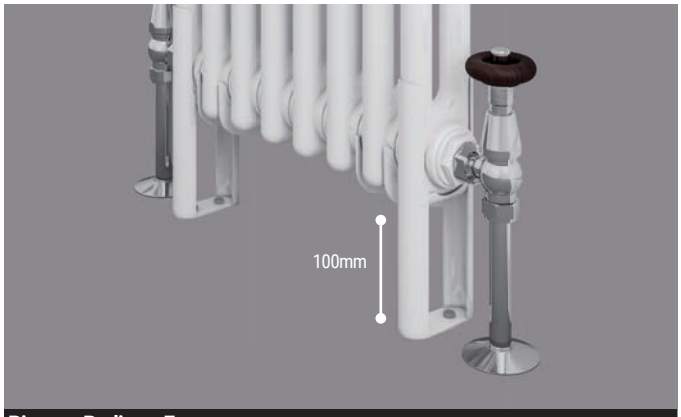

Rivassa Radiator Feet

Description	Code	€ Ex VAT	€ Inc VAT
Rivassa 2 Column Radiator Feet (pair) White	81.0034	49.00	**60.27**
Rivassa 2 Column Rad. Feet (pair) Matt Anthracite	81.0035	49.00	**60.27**
Rivassa 2 Column Rad. Feet (pair) Matt Black	81.0222	49.00	**60.27**



Pictured 81.0049 Matt Anthracite with 16.158 Towel Hanger

Rivassa Towel Hangers
Page 738



Robe Hooks
Page 738



Round Vent Caps
Page 741

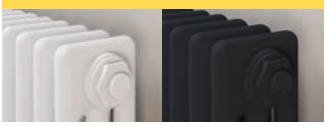

Traditional Range

RIVASSA 2 COLUMN

Bronze Effect



Pictured 81.0111 Bronze Effect with 81.0114 feet

Chrome Effect



Pictured 81.0123 Chrome Effect

Traditional Range

RIVASSA 2 COLUMN

Rivassa Two Column Radiators - Bronze Effect

Size H x W	Watts	BTU	Element Output	Element Type	Code	€ Ex VAT	€ Inc VAT
600 x 608mm	818	2792	450W	A, A+, C, H	81.0108	420.00	**516.60**
600 x 833mm	1133	3866	600W	A, A+, C, E*, H	81.0109	581.00	**714.63**
600 x 1010mm	1385	4727	750W	A, A+, C, H	81.0110	713.00	**876.99**
600 x 1148mm	1573	5369	900W	A, A+, H	81.0111	805.00	**990.15**
1800 x 383mm	1245	4247	N/A	N/A	81.0113	500.00	**615.00**
1800 x 473mm	1556	5308	N/A	N/A	81.0112	621.00	**763.83**

*600w Type E Element can be fitted

Rivassa Two Column Radiators - Chrome Effect

Size H x W	Watts	BTU	Element Output	Element Type	Code	€ Ex VAT	€ Inc VAT
600 x 608mm	818	2792	450W	A, A+, C, H	81.0122	436.00	**536.28**
600 x 833mm	1133	3866	600W	A, A+, C, E*, H	81.0123	600.00	**738.00**
600 x 1010mm	1385	4727	750W	A, A+, C, H	81.0124	731.00	**899.13**
600 x 1148mm	1573	5369	900W	A, A+, H	81.0125	829.00	**1019.67**
1800 x 383mm	1245	4247	N/A	N/A	81.0127	513.00	**630.99**
1800 x 473mm	1556	5308	N/A	N/A	81.0126	640.00	**787.20**

*600w Type E Element can be fitted

A traditional rail which will give a Victorian touch of authenticity to any room but will also create an elegant look to a contemporary interior. This radiator boasts high outputs to ensure the whole room is warm. Comes with the option of traditional legs and in bronze effect or chrome effect finishes. Also available in three columns.

FEATURES

- Tested to BS EN 442 standards
- 5 Year Manufacturer's Warranty*
- Matching colour wall fixing sets
- Radiator feet option available to get the classic look
- Material thickness 1.5mm
- Doesn't require flow diverter

* With conditions

Technical Tables & Drawings
Page 804-805

TECHNICAL INFORMATION

All measurements in Height by Width. Heat output based on ▲T60˚C. Radiators that are electric only are restricted to the heat output of the elements. Element size can be increased to full capacity of rail if using element type C, E or H. For element types see pages 718-729. For matching valves see pages 731-737. For indirect heating systems. Tappings are the width of the rail and 65.5mm off the wall. Prices include radiator and wall fixings sets, valves extra.

Bronze Effect



Chrome Effect

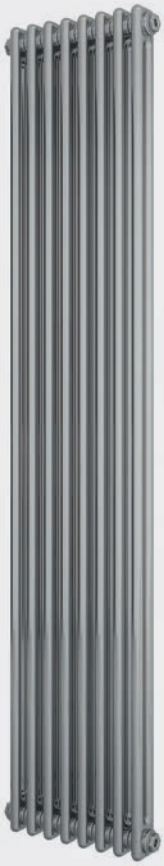

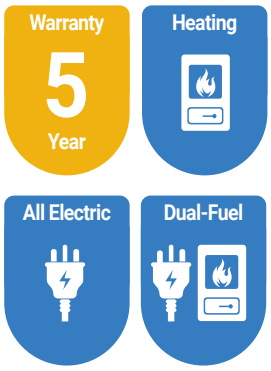

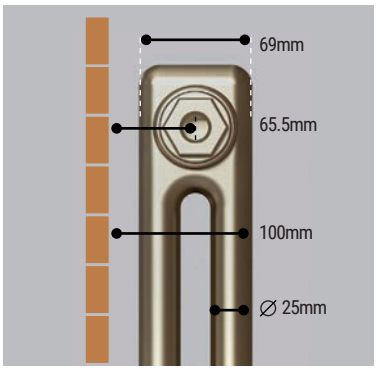

COMPLETE THE LOOK

Traditional TRVs
Page 733



Angle TRV with Lockshield 15mm (pair) - Chrome

Code	€ Ex VAT	€ Inc VAT
54.0008	119.00	**146.37**



Angle TRV with Lockshield 15mm (pair) - Satin Nickel

Code	€ Ex VAT	€ Inc VAT
54.0009	129.00	**158.67**

RIVASSA 2 COLUMN RADIATOR FEET

Rivassa 2 Column Feet - Bronze Effect

Description	Code	€ Ex VAT	€ Inc VAT
2 Column Radiator Feet (pair)	81.0114	49.00	**60.27**

Rivassa 2 Column Feet - Chrome Effect

Description	Code	€ Ex VAT	€ Inc VAT
2 Column Radiator Feet (pair)	81.0128	51.00	**62.73**



Robe Hooks
Page 738



Rivassa Towel Hangers
Page 738



Traditional Range

RIVASSA 3 COLUMN

Including new colour



Pictured 81.0028 Matt Anthracite



Pictured 81.0033 Matt Anthracite with 81.0037 Feet

Traditional TRVs
Page 733



Pictured 81.0016 Gloss White

A traditional rail which will give a Victorian touch of authenticity to any room but will also create an elegant look to a contemporary interior. This radiator boasts high outputs to ensure the whole room is warm. Comes with the option of traditional legs and in gloss white, matt anthracite or matt black finishes. Also available in two and four columns.

FEATURES
- Tested to BS EN 442 standards
- 5 Year Manufacturer's Warranty*
- Matching colour wall fixing sets
- 300mm height option for limited spaces
- Radiator feet option available to get the classic look
- Material thickness 1.5mm
- Doesn't require flow diverter

* With conditions

Technical Tables & Drawings
Page 804-805

Warranty 5 Year

Heating

All Electric

Dual-Fuel

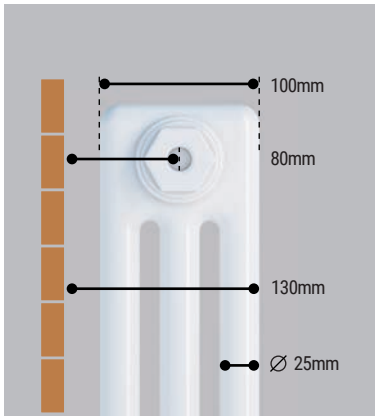

Traditional Range

Including new colour

RIVASSA 3 COLUMN

Rivassa Three Column Radiators - White

Size H x W	Watts	BTU	Element Output	Element Type	Code	€ Ex VAT	€ Inc VAT
300 x 1148mm	1118	3816	600W	A, A+, C, E*, H	81.0013	661.00	**813.03**
300 x 1373mm	1342	4579	750W	A, A+, C, E*, H	81.0014	790.00	**971.70**
600 x 428mm	734	2504	450W	A, A+, C, H	81.0042	303.00	**372.69**
600 x 473mm	816	2782	450W	A, A+, C, H	81.0043	334.00	**410.82**
600 x 518mm	898	3061	450W	A, A+, C, H	81.0044	366.00	**450.18**
600 x 563mm	979	3339	600W	A+, C, H	81.0045	398.00	**489.54**
600 x 608mm	1060	3616	600W	A+, C, H	81.0015	439.00	**539.97**
600 x 833mm	1467	5007	900W	A+, C, H	81.0016	605.00	**744.15**
600 x 1010mm	1794	6123	1000W	A, A+, C, H	81.0079	735.00	**904.05**
600 x 1148mm	2038	6954	1200W	A, A+, H	81.0017	835.00	**1027.05**
600 x 1460mm	2609	8904	1200W	A, A+, H	81.0080	1071.00	**1317.33**
1800 x 293mm	1563	5333	N/A	N/A	81.0010	406.00	**499.38**
1800 x 383mm	2084	7111	N/A	N/A	81.0011	506.00	**622.38**
1800 x 473mm	2605	8889	N/A	N/A	81.0012	630.00	**774.90**

*600w Type E Element can be fitted

Rivassa Three Column Radiators - Matt Anthracite

Size H x W	Watts	BTU	Element Output	Element Type	Code	€ Ex VAT	€ Inc VAT
300 x 1148mm	1118	3816	600W	A, A+, C, E*, H	81.0029	671.00	**825.33**
300 x 1373mm	1342	4579	750W	A, A+, C, E*, H	81.0030	805.00	**990.15**
600 x 428mm	734	2504	450W	A, A+, C, H	81.0050	307.00	**377.61**
600 x 473mm	816	2782	450W	A, A+, C, H	81.0051	339.00	**416.97**
600 x 518mm	898	3061	450W	A, A+, C, H	81.0052	377.00	**463.71**
600 x 563mm	979	3339	600W	A+, C, H	81.0053	405.00	**498.15**
600 x 608mm	1060	3616	600W	A+, C, H	81.0031	446.00	**548.58**
600 x 833mm	1467	5007	900W	A+, C, H	81.0032	614.00	**755.22**
600 x 1010mm	1794	6123	1000W	A, A+, C, H	81.0092	751.00	**923.73**
600 x 1148mm	2038	6954	1200W	A, A+, H	81.0033	852.00	**1047.96**
600 x 1460mm	2609	8904	1200W	A, A+, H	81.0093	1090.00	**1340.70**
1800 x 293mm	1563	5333	N/A	N/A	81.0026	415.00	**510.45**
1800 x 383mm	2084	7111	N/A	N/A	81.0027	518.00	**637.14**
1800 x 473mm	2605	8889	N/A	N/A	81.0028	643.00	**790.89**

*600w Type E Element can be fitted

Rivassa Three Column Radiators - Matt Black *New Colour*

Size H x W	Watts	BTU	Element Output	Element Type	Code	€ Ex VAT	€ Inc VAT
300 x 1148mm	1118	3816	600W	A, A+, C, E*, H	81.0223	671.00	**825.33**
300 x 1373mm	1342	4579	750W	A, A+, C, E*, H	81.0224	805.00	**990.15**
600 x 428mm	734	2504	450W	A, A+, C, H	81.0225	307.00	**377.61**
600 x 473mm	816	2782	450W	A, A+, C, H	81.0226	339.00	**416.97**
600 x 518mm	898	3061	450W	A, A+, C, H	81.0227	377.00	**463.71**
600 x 563mm	979	3339	600W	A+, C, H	81.0228	405.00	**498.15**
600 x 608mm	1060	3616	600W	A+, C, H	81.0229	446.00	**548.58**
600 x 833mm	1467	5007	900W	A+, C, H	81.0230	614.00	**755.22**
600 x 1010mm	1794	6123	1000W	A, A+, C, H	81.0231	751.00	**923.73**
600 x 1148mm	2038	6954	1200W	A, A+, H	81.0232	852.00	**1047.96**
600 x 1460mm	2609	8904	1200W	A, A+, H	81.0233	1090.00	**1340.70**
1800 x 293mm	1563	5333	N/A	N/A	81.0234	415.00	**510.45**
1800 x 383mm	2084	7111	N/A	N/A	81.0235	518.00	**637.14**
1800 x 473mm	2605	8889	N/A	N/A	81.0236	643.00	**790.89**

*600w Type E Element can be fitted

TECHNICAL INFORMATION

All measurements in Height by Width. Heat output based on ▲T60˚C. Radiators that are electric only are restricted to the heat output of the elements. Element size can be increased to full capacity of rail if using element type C, E or H. For element types see pages 718-729. For matching valves see pages 731-737. For indirect heating systems. Tappings are the width of the rail and 80mm off the wall. Prices include radiator and wall fixings sets, valves extra.



Pictured 81.0231 Matt Black with 81.0237 Feet

RIVASSA 3 COLUMN RADIATOR FEET

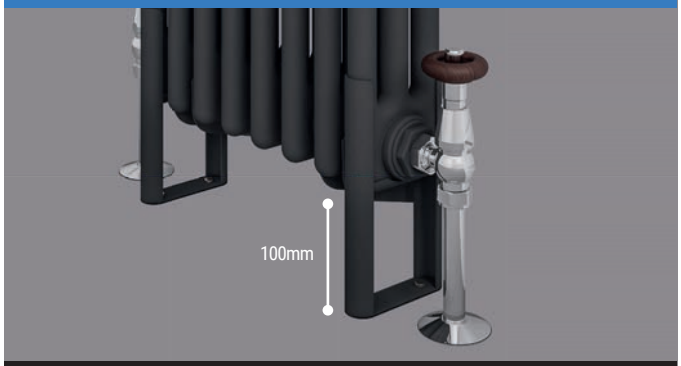

Rivassa Radiator Feet

Description	Code	€ Ex VAT	€ Inc VAT
Rivassa 3 Column Radiator Feet (pair) White	81.0036	49.00	**60.27**
Rivassa 3 Column Radiator Feet (pair) Matt Anthracite	81.0037	49.00	**60.27**
Rivassa 3 Column Radiator Feet (pair) Matt Black	81.0237	49.00	**60.27**



Pictured 81.0042 Gloss White

Rivassa Towel Hangers
Page 738



Robe Hooks
Page 738



Round Vent Caps
Page 741



Traditional Range

RIVASSA 3 COLUMN

Bronze Effect

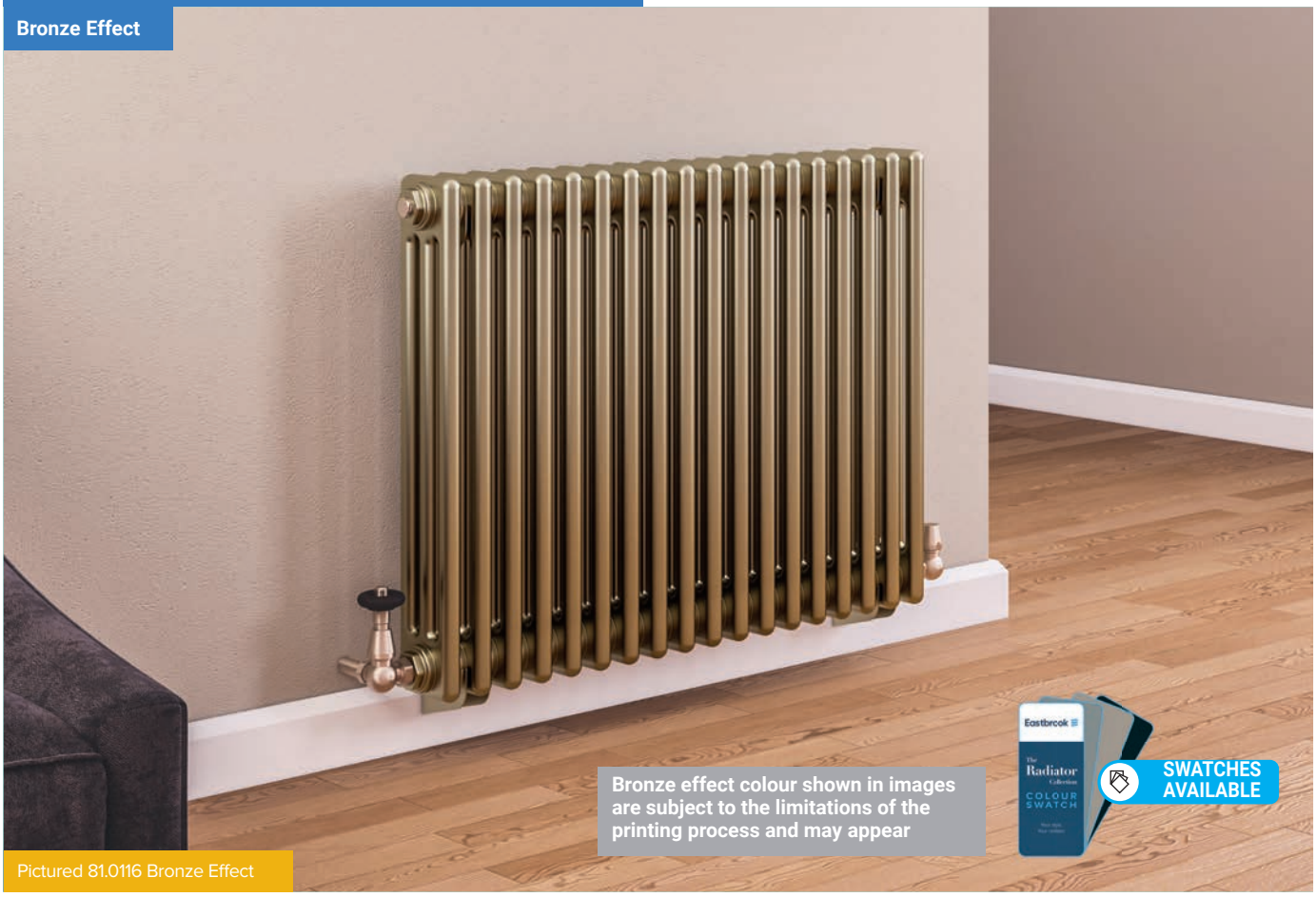

Pictured 81.0116 Bronze Effect

Chrome Effect



Pictured 81.0131 Chrome Effect

Traditional Range

RIVASSA 3 COLUMN

Rivassa Three Column Radiators - Bronze Effect

Size H x W	Watts	BTU	Element Output	Element Type	Code	€ Ex VAT	€ Inc VAT
600 x 608mm	1060	3616	600W	A+, C, H	81.0115	446.00	**548.58**
600 x 833mm	1467	5007	900W	A+, C, H	81.0116	614.00	**755.22**
600 x 1010mm	1794	6123	1000W	A, A+, C, H	81.0117	751.00	**923.73**
600 x 1148mm	2038	6954	1200W	A, A+, H	81.0118	853.00	**1049.19**
1800 x 383mm	2084	7111	N/A	N/A	81.0120	523.00	**643.29**
1800 x 473mm	2605	8889	N/A	N/A	81.0119	654.00	**804.42**

Rivassa Three Column Radiators - Chrome Effect

Size H x W	Watts	BTU	Element Output	Element Type	Code	€ Ex VAT	€ Inc VAT
600 x 608mm	1060	3616	600W	A+, C, H	81.0129	460.00	**565.80**
600 x 833mm	1467	5007	900W	A+, C, H	81.0130	632.00	**777.36**
600 x 1010mm	1794	6123	1000W	A, A+, C, H	81.0131	773.00	**950.79**
600 x 1148mm	2038	6954	1200W	A, A+, H	81.0132	877.00	**1078.71**
1800 x 383mm	2084	7111	N/A	N/A	81.0134	538.00	**661.74**
1800 x 473mm	2605	8889	N/A	N/A	81.0133	677.00	**832.71**

A traditional rail which will give a Victorian touch of authenticity to any room but will also create an elegant look to a contemporary interior. This radiator boasts high outputs to ensure the whole room is warm. Comes with the option of traditional legs and in bronze effect or chrome effect finishes. Also available in two columns.

FEATURES

- Tested to BS EN 442 standards
- 5 Year Manufacturer's Warranty*
- Matching colour wall fixing sets
- Radiator feet option available to get the classic look
- Material thickness 1.5mm
- Doesn't require flow diverter

* With conditions

Technical Tables & Drawings
Page 804-805

Bronze Effect

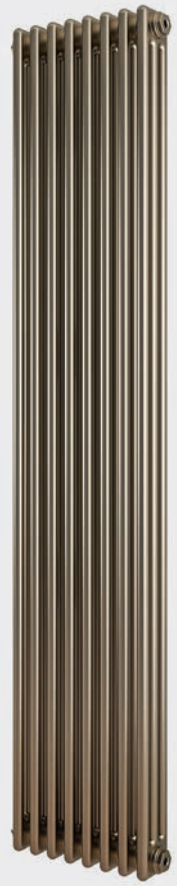

Chrome Effect

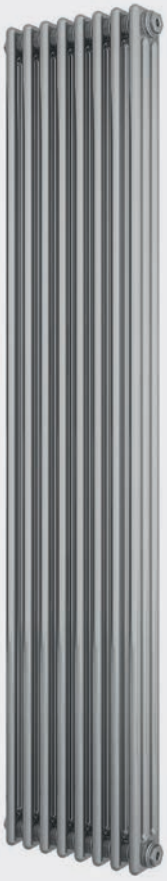

Warranty 5 Year

Heating

All Electric

Dual-Fuel

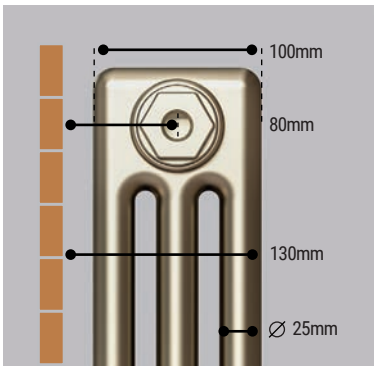

TECHNICAL INFORMATION

All measurements in Height by Width. Heat output based on ▲T60˚C. Radiators that are electric only are restricted to the heat output of the elements. Element size can be increased to full capacity of rail if using element type C, E or H. For element types see pages 718-729. For matching valves see pages 731-737. For indirect heating systems. Tappings are the width of the rail and 80mm off the wall. Prices include radiator and wall fixings sets, valves extra.

COMPLETE THE LOOK

Traditional TRVs
Page 733



Angle TRV with Lockshield 15mm (pair) - Chrome

Code	€ Ex VAT	€ Inc VAT
54.0008	119.00	**146.37**



Angle TRV with Lockshield 15mm (pair) - Satin Nickel

Code	€ Ex VAT	€ Inc VAT
54.0009	129.00	**158.67**

RIVASSA 3 COLUMN RADIATOR FEET

Rivassa 3 Column Feet - Bronze Effect

Description	Code	€ Ex VAT	€ Inc VAT
3 Column Radiator Feet (pair)	81.0121	49.00	**60.27**

Rivassa 3 Column Feet - Chrome Effect

Description	Code	€ Ex VAT	€ Inc VAT
3 Column Radiator Feet (pair)	81.0135	51.00	**62.73**



Rivassa Towel Hangers
Page 738



Robe Hooks
Page 738



Traditional Range

RIVASSA 4 COLUMN

Including new colour



Traditional TRVs
Page 733

Pictured 81.0074 Gloss White with 81.0076 Feet



Rivassa Towel Hangers
Page 738

Pictured 81.0088 Matt Anthracite

A traditional rail which will give a Victorian touch of authenticity to any room but will also create an elegant look to a contemporary interior. This radiator boasts high outputs to ensure the whole room is warm. Comes with the option of traditional legs and in gloss white, matt anthracite or matt black finishes. Also available in two and three columns.

FEATURES
- Tested to BS EN 442 standards
- 5 Year Manufacturer's Warranty*
- Matching colour wall fixing sets
- 300mm height option for limited spaces
- Radiator feet option available to get the classic look
- Material thickness 1.5mm
- Doesn't require flow diverter

* With conditions

Warranty 5 Year | Heating | All Electric | Dual-Fuel

Technical Tables & Drawings
Page 806-807

Traditional Range

Including new colour

RIVASSA 4 COLUMN

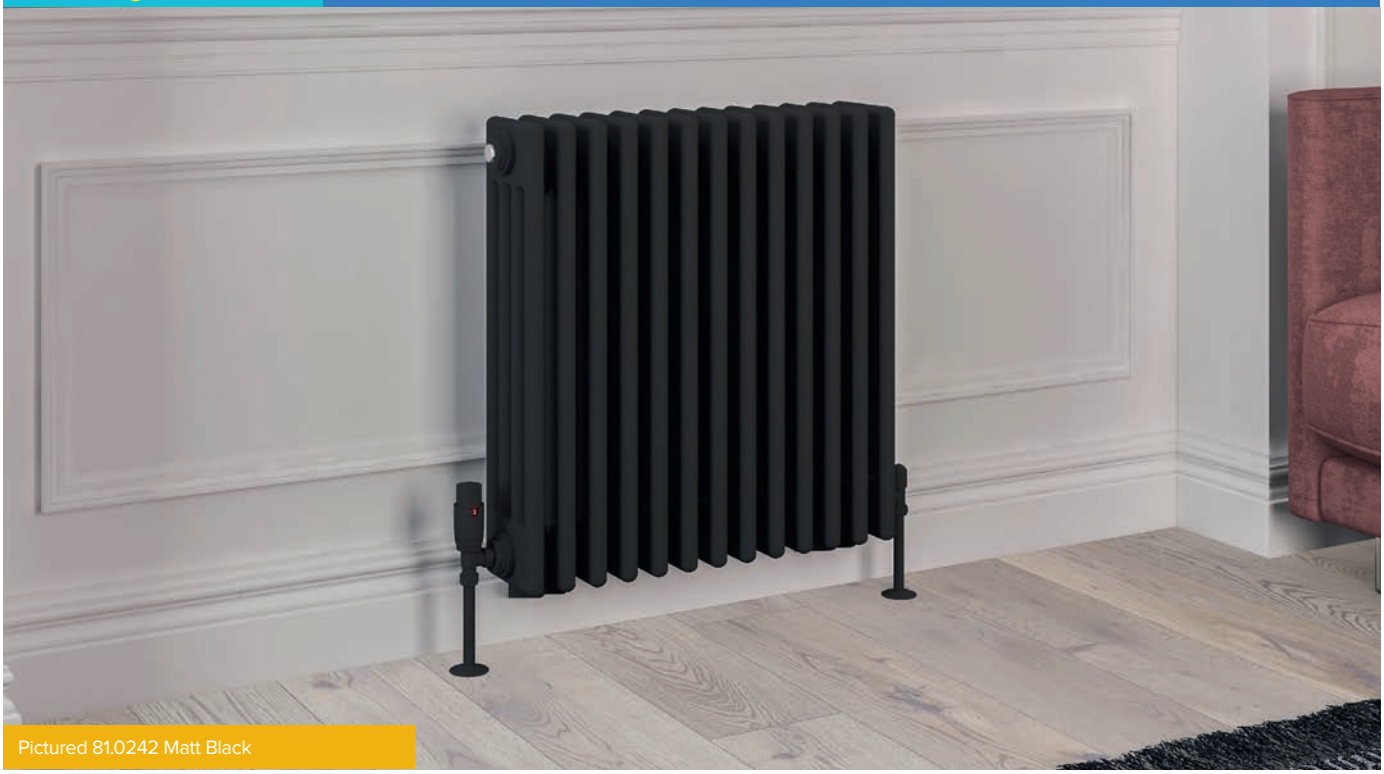

Pictured 81.0242 Matt Black

Rivassa Four Column Radiators - Gloss White

Size H x W	Watts	BTU	Element Output	Element Type	Code	€ Ex VAT	€ Inc VAT
300 x 1010mm	1197	4085	600W	A, A+, C, E*, H	81.0068	670.00	**824.10**
300 x 1373mm	1633	5573	1000W	A, A+, H	81.0069	913.00	**1122.99**
300 x 1505mm	1796	6110	1000W	A+, H	81.0070	1001.00	**1231.23**
600 x 425mm	869	2966	450W	A, A+	81.0071	401.00	**493.23**
600 x 605mm	1255	4283	750W	A+, C, H	81.0072	576.00	**708.48**
600 x 785mm	1641	5601	900W	A+, H	81.0073	751.00	**923.73**
600 x 1010mm	2124	7249	1200W	A, A+	81.0074	968.00	**1190.64**
600 x 1190mm	2510	8567	1200W	A, A+	81.0075	1146.00	**1409.58**

*600w Type E Element can be fitted

Rivassa Four Column Radiators - Matt Black

New Colour

Size H x W	Watts	BTU	Element Output	Element Type	Code	€ Ex VAT	€ Inc VAT
300 x 1010mm	1197	4085	600W	A, A+, C, E*, H	81.0238	684.00	**841.32**
300 x 1373mm	1633	5573	1000W	A, A+, H	81.0239	931.00	**1145.13**
300 x 1505mm	1796	6110	1000W	A+, H	81.0240	1022.00	**1257.06**
600 x 425mm	869	2966	450W	A, A+	81.0241	406.00	**499.38**
600 x 605mm	1255	4283	750W	A+, C, H	81.0242	588.00	**723.24**
600 x 785mm	1641	5601	900W	A+, H	81.0243	765.00	**940.95**
600 x 1010mm	2124	7249	1200W	A, A+	81.0244	990.00	**1217.70**
600 x 1190mm	2510	8567	1200W	A, A+	81.0245	1165.00	**1432.95**

*600w Type E Element can be fitted

Rivassa Four Column Radiators - Matt Anthracite

Size H x W	Watts	BTU	Element Output	Element Type	Code	€ Ex VAT	€ Inc VAT
300 x 1010mm	1197	4085	600W	A, A+, C, E*, H	81.0081	684.00	**841.32**
300 x 1373mm	1633	5573	1000W	A, A+, H	81.0082	931.00	**1145.13**
300 x 1505mm	1796	6110	1000W	A+, H	81.0083	1022.00	**1257.06**
600 x 425mm	869	2966	450W	A, A+	81.0084	406.00	**499.38**
600 x 605mm	1255	4283	750W	A+, C, H	81.0085	588.00	**723.24**
600 x 785mm	1641	5601	900W	A+, H	81.0086	765.00	**940.95**
600 x 1010mm	2124	7249	1200W	A, A+	81.0087	990.00	**1217.70**
600 x 1190mm	2510	8567	1200W	A, A+	81.0088	1165.00	**1432.95**

*600w Type E Element can be fitted

TECHNICAL INFORMATION

All measurements in Height by Width. Heat output based on ▲T60˚C. Radiators that are electric only are restricted to the heat output of the elements. Element size can be increased to full capacity of rail if using element type C, E or H. For element types see pages 718-729. For matching valves see pages 731-737. For indirect heating systems. Tappings are the width of the rail and 95mm off the wall. Projection from wall 165mm. Prices include radiator and wall fixings sets, valves extra.

RIVASSA 4 COLUMN RADIATOR FEET

Description	Code	€ Ex VAT	€ Inc VAT
Rivassa 4 Column Radiator Feet (pair) - Gloss White	81.0076	59.00	**72.57**
Rivassa 4 Column Radiator Feet (pair) - Matt Anthracite	81.0089	59.00	**72.57**
Rivassa 4 Column Radiator Feet (pair) - Matt Black	81.0246	59.00	**72.57**



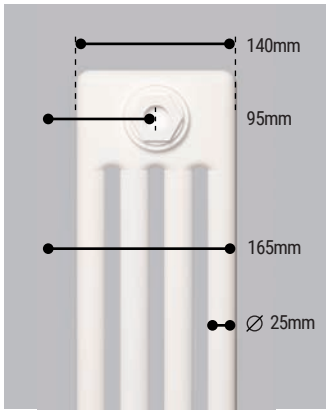

Round Vent Caps
Page 741



Robe Hooks
Page 738



Traditional Range

LEADON

For element types see pages 718-729.



Our traditional range of radiators offer character and flair to ensure they fit in with your classic designs. These rails should only be used on closed or indirect heating circuits, not on fresh water hot systems as they are of steel construction.

Leadon - Chrome / Gloss White

Size H x W x D	Watts	BTU	Element Output	Element Type	Code	€ Ex VAT	€ Inc VAT
940 x 700 x 260mm	897	3061	450W	A, A+, C, H	41.1007	866.00	**1065.18**

Tappings are approx. 130mm less than the width of the rail and approx. 137mm off the wall.

FEATURES
- Tested to BS EN 442 standards
- 5 Year Manufacturer's Warranty*
- Can be single or dual fuel, or all electric

* With conditions

Technical Tables & Drawings
Page 806-807

TECHNICAL INFORMATION

All measurements in Height by Width. Heat output based on ▲T60˚C. Radiators that are electric only are restricted to the heat output of the elements. Element size can be increased to full capacity of rail if using element type C or H. For element types see pages 718-729. For matching valves see pages 731-737. For indirect heating systems. Prices include radiator and wall fixings sets, valves extra.

Warranty 5 Year

Heating

All Electric

Dual-Fuel



Pair of Radiator Valves & Tails

Code	€ Ex VAT	€ Inc VAT
54.0001	72.00	**88.56**

Radiator valves sold separately

THAMES

For element types see pages 718-729.



Our traditional range of radiators offer character and flair to ensure they fit in with your classic designs. These rails only be used on closed or indirect heating circuits, not on fresh water hot systems as they are of steel construction.

Thames - Chrome / Gloss White

Size H x W x D	Watts	BTU	Element Output	Element Type	Code	€ Ex VAT	€ Inc VAT
1444 x 630 x 187mm	945	3224	450W	A, A+, C, H	41.1004	966.00	**1188.18**

Tappings are approx. 130mm less than the width of the rail and approx. 150mm off the wall.

FEATURES
- Tested to BS EN 442 standards
- 5 Year Manufacturer's Warranty*
- Can be single or dual fuel, or all electric

* With conditions

Technical Tables & Drawings
Page 806-807

TECHNICAL INFORMATION

All measurements in Height by Width. Heat output based on ▲T60˚C. Radiators that are electric only are restricted to the heat output of the elements. Element size can be increased to full capacity of rail if using element type C or H. For element types see pages 718-729. For matching valves see pages 731-737. For indirect heating systems. Prices include radiator and wall fixings sets, valves extra.

Warranty 5 Year

Heating

All Electric

Dual-Fuel



Pair of Radiator Valves & Tails

Code	€ Ex VAT	€ Inc VAT
54.0001	72.00	**88.56**

Radiator valves sold separately

Traditional Range

COLN



Our traditional range of radiators offer character and flair to ensure they fit in with your classic designs. These rails should only be used on closed or indirect heating circuits, not on fresh water hot systems as they are of steel construction.

Coln - Chrome / Gloss White

Size H x W x D	Watts	BTU	Element Output	Element Type	Code	€ Ex VAT	€ Inc VAT
510 x 680 x 260mm	704	2402	300W	A, A+, C, H	41.1002	654.00	**804.42**

On dual fuel installation, please use only Type A element.
Tappings approx. 4mm less than the width of the rail and approx. 50mm off the wall.

FEATURES
- Tested to BS EN 442 standards
- 5 Year Manufacturer's Warranty*
- Can be single or dual fuel, or all electric

* With conditions

Technical Tables & Drawings
Page 806-807

TECHNICAL INFORMATION

All measurements in Height by Width. Heat output based on ▲T60˚C. Radiators that are electric only are restricted to the heat output of the elements. Element size can be increased to full capacity of rail if using element type C or H. For element types see pages 718-729. For matching valves see pages 731-737. For indirect heating systems. Prices include radiator and wall fixings sets, valves extra.

Warranty 5 Year | Heating | All Electric | Dual-Fuel



Pair of Radiator Valves & Tails

Code	€ Ex VAT	€ Inc VAT
54.0001	72.00	**88.56**

Radiator valves sold separately

TWYVER



Our traditional range of radiators offer character and flair to ensure they fit in with your classic designs. These rails should only be used on closed or indirect heating circuits, not on fresh water hot systems as they are of steel construction.

Twyver - Chrome / Gloss White

Size H x W x D	Watts	BTU	Element Output	Element Type	Code	€ Ex VAT	€ Inc VAT
952 x 684 x 158mm	580	1979	N/A	N/A	41.1011	892.00	**1097.16**

Tappings are approx. 137mm less than the width of the rail and approx. 108mm off the wall.

FEATURES
- Tested to BS EN 442 standards.
- 5 Year Manufacturer's Warranty*
- Not suitable for elements

* With conditions

Technical Tables & Drawings
Page 806-807

TECHNICAL INFORMATION

All measurements in Height by Width. Heat output based on ▲T60˚C. For matching valves see pages 731-737. For indirect heating systems. Prices include radiator and wall fixings sets, valves extra.

Warranty 5 Year | Heating



Sub Section

Accessories, Elements & Valves

A huge variety of elements and valves to allow easy control of your radiators heat output, whilst looking stylish.

Complete the look with coloured pipe shrouds and vent caps to match your radiator colour.

To add extra functionality, towel hangers & robe hooks make daily life easy when warming towels.



Contents

Elements - **NEW PRODUCTS**	718-729
Crafton Control Plate, T Pieces, Elbows & Corner Dual Fuel TRV's	730
Valves, Contemporary & Traditional	732-733
Twin Thermostatic Valves	733
Manual Radiator Valves	734-735
Thermostatic Radiator Valves - **NEW COLOUR**	736-737
Multi-Rail Towel Hangers, Towel Hangers & Robe Hooks	738
Pipe Shrouds & Collar Kits	739
Multi Purpose Towel Hangers	740
Vent Caps, Round & D Shape	741

Elements

Build up your 'All Electric' Towel Rail/Radiator

Please note that all fluid filled rails are special order, elements will be fitted RH Side and are non-returnable.

Step 1
Choose your towel rail/radiator (Please make sure that you can see the "All Electric / Dual Fuel" icon on the chosen towel rail/radiator page).

Step 2
Refer to the "Element Output" column for the required output to suit the chosen towel rail/radiator.

Step 3
Choose which element type best suits your need from the "Element Type" column. Please check that the IP Rating is suitable for the site circumstances.

Step 4
For "All Electric" installation please add Fluid Filling.

Build up your 'Dual Fuel' Towel Rail/Radiator

Repeat **Steps 1-3** as left. Please add your radiator valves and dual elbow where applicable.

Fluid filling is not required.

ELEMENT TYPE A+



Power	Length (mm)
100W	135
150W	170
300W	250
450W	350
600W	470
750W	590
900W	690
1000W	760
1200W	910

*(Not including appropriate element). I.P. rating 55. (Zone 2 and 3)
Please note all fluid filled rails are special order and are **non-returnable**.

FEATURES
- Elements use PTC self regulating technology providing excellent reliability and extended working life

TECHNICAL INFORMATION For an all electric towel rail/radiator, fluid filling must be purchased. Electric only elements will be fitted RH side unless otherwise specified. For dual fuel installations, purchase T piece separately. (Page 730)
Element should be rated at less than 60% of the radiator's output.

Element Type A+			Item A Required
Description	Code	€ Ex VAT	€ Inc VAT
100 watt element	8.016	86.00	**105.78**
150 watt element	8.017	86.00	**105.78**
300 watt element	8.018	90.00	**110.70**
450 watt element	8.019	97.00	**119.31**
600 watt element	8.020	126.00	**154.98**
750 watt element	8.021	131.00	**161.13**
900 watt element	8.022	136.00	**167.28**
1000 watt element	8.023	142.00	**174.66**
1200 watt element	8.024	146.00	**179.58**
Fluid filling for above rail (electric only)*	FF	164.00	**201.72**

*All Type A+ must be fitted with cover cap. (See below)

Element Type A+ Cover Caps			Item B Required
Description	Code	€ Ex VAT	€ Inc VAT
White Cap	8.025	10.00	**12.30**
Chrome Cap	8.026	16.00	**19.68**
Grey Cap	8.027	16.00	**19.68**
Cappuccino Cap	8.028	16.00	**19.68**
Anthracite Cap	8.029	16.00	**19.68**
Black Cap	8.030	16.00	**19.68**



ELEMENT TYPE A



Dual Fuel Installation



Power	Length (mm)
100W	220
150W	220
300W	300
600W	620
900W	920

Element should be rated at less than 60% of the radiator's output.

Element Type A			
Description	Code	€ Ex VAT	€ Inc VAT
100 watt element	8.009	89.00	**109.47**
150 watt element	8.004	89.00	**109.47**
300 watt element	8.001	93.00	**114.39**
600 watt element	8.002	131.00	**161.13**
900 watt element	8.003	161.00	**198.03**
Fluid filling for above rail (electric only)*	FF	164.00	**201.72**

*(Not including appropriate element). I.P. rating 55. (Zone 2 and 3)
Please note all fluid filled rails are special order and are **non-returnable**.

FEATURES
- Elements use PTC self regulating technology providing excellent reliability and extended working life

TECHNICAL INFORMATION For an all electric towel rail/radiator, fluid filling must be purchased. Electric only elements will be fitted RH side unless otherwise specified. For dual fuel installations, purchase T piece separately. (Page 730)

ELEMENT TYPE C

WATER TEMPERATURE CONTROL



Including radiator temperature thermostat for horizontal installation and supplied with Chrome T piece

Power	Length (mm)
300W	340
600W	390
900W	440

Element Type C			
Description	Code	€ Ex VAT	€ Inc VAT
Up to 300W element (inc rad stat) horizontal	8.300	250.00	**307.50**
300W to 600W element (inc rad stat) horizontal	8.301	262.00	**322.26**
600W to 900W element (inc rad stat) horizontal	8.302	269.00	**330.87**
Fluid filling for above rail (electric only)*	FF	164.00	**201.72**
Extension piece for type c element**	8.903	27.00	**33.21**

*(not including appropriate element). I.P. rating 54. (Zone 2 and 3).
Please note all fluid filled rails are special order and are **non-returnable**.
**Some traditional rails may require an extension piece for a type C element.

FEATURES
- Water temperature controlled Thermostat
- Towel drying
- Low running costs
- Simple installation
- Wide temperature range 10-60°C

TECHNICAL INFORMATION For an all electric towel rail/radiator, fluid filling must be purchased. Electric only elements will be fitted RH side unless otherwise specified.
Only suitable with Chrome T-Piece - 8.901 & Chrome Elbow - 41.3003.

Elements

ELEMENT TYPE D — WATER TEMPERATURE CONTROL



Including radiator temperature thermostat for vertical installation and Chrome T piece

Power	Length
300W	340
600W	390
900W	440

Element Type D

Description	Code	€ Ex VAT	€ Inc VAT
Up to 300W element (inc rad stat) vertical	8.310	209.00	**257.07**
Up to 600W element (inc rad stat) vertical	8.311	220.00	**270.60**
Up to 900W element (inc rad stat) vertical	8.312	224.00	**275.52**
Fluid filling for above rail (electric only)*	FF	164.00	**201.72**

*(not including appropriate element). I.P. rating 54. (Zone 2 and 3)
Please note all fluid filled rails are special order and are **non-returnable**.

FEATURES
- Off season heating
- Water temperature controlled Thermostat
- Low running costs
- Simple installation
- Wide temperature range 10-60°C

TECHNICAL INFORMATION For an all electric towel rail/radiator, fluid filling must be purchased. Electric only elements will be fitted RH side unless otherwise specified. **Only suitable with Chrome T-Piece - 8.901 & Chrome Elbow - 41.3003.**

ELEMENT TYPE D WITH BOOST — WATER TEMPERATURE CONTROL

Turbo Boost Function

Including radiator temperature thermostat for vertical installation and T-Piece*

*Chrome, Matt Anthracite & Matt Black elements come with Chrome T-Piece.
*Gloss White & Matt White elements both come with white T-Piece.

Power	Length
300W	340
600W	390
900W	440

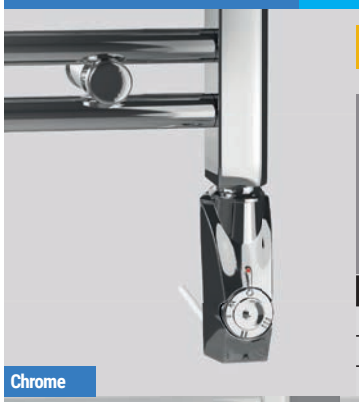





Element Type D With Boost

Description	Colour	Code	€ Ex VAT	€ Inc VAT
300W Type D Element with Boost	Chrome	8.320	215.00	**264.45**
600W Type D Element with Boost	Chrome	8.321	224.00	**275.52**
900W Type D Element with Boost	Chrome	8.322	231.00	**284.13**
300W Type D Element with Boost	Gloss White	8.323	215.00	**264.45**
600W Type D Element with Boost	Gloss White	8.324	224.00	**275.52**
900W Type D Element with Boost	Gloss White	8.325	231.00	**284.13**
300W Type D Element with Boost	Matt White	8.326	238.00	**292.74**
600W Type D Element with Boost	Matt White	8.327	250.00	**307.50**
900W Type D Element with Boost	Matt White	8.328	255.00	**313.65**
300W Type D Element with Boost	Matt Anthracite	8.329	238.00	**292.74**
600W Type D Element with Boost	Matt Anthracite	8.330	250.00	**307.50**
900W Type D Element with Boost	Matt Anthracite	8.331	255.00	**313.65**
300W Type D Element with Boost	Matt Black	8.332	238.00	**292.74**
600W Type D Element with Boost	Matt Black	8.333	250.00	**307.50**
900W Type D Element with Boost	Matt Black	8.334	255.00	**313.65**
Fluid filling for above rail (electric only)*	-	FF	164.00	**201.72**

*(not including appropriate element). I.P. rating 54. (Zone 2 and 3)
Please note all fluid filled rails are special order and are **non-returnable**.

FEATURES
- Turbo boost function (full heating - 1, 2 or 3 hours settings)
- Anti-Freeze function
- Water temperature controlled Thermostat
- Smooth temperature adjustment (10°C to 65°C)
- Low running costs
- Simple installation

TECHNICAL INFORMATION For an all electric towel rail/radiator, fluid filling must be purchased. Electric only elements will be fitted RH side unless otherwise specified. **Only suitable with Chrome T-Piece - 8.901 & Chrome Elbow - 41.3003.**

ELEMENT TYPE E — WATER TEMPERATURE CONTROL





Including radiator temperature thermostat for vertical & horizontal installation

Power	Length (mm)
150W	370
300W	390
600W	750

Element Type E

Description	Code	€ Ex VAT	€ Inc VAT
150w Type E Element White	8.034	201.00	**247.23**
300w Type E Element White	8.035	208.00	**255.84**
600w Type E Element White	8.036	220.00	**270.60**
150w Type E Element Chrome	8.031	215.00	**264.45**
300w Type E Element Chrome	8.032	224.00	**275.52**
600w Type E Element Chrome	8.033	251.00	**308.73**
Fluid filling for above rail (electric only)*	FF	164.00	**201.72**

*(Not including appropriate element). I.P. rating X4. (Zone 2 and 3)
Please note all fluid filled rails are special order and are **non-returnable**.

FEATURES
- Off season heating
- Water temperature controlled Thermostat
- Low running costs
- Simple installation
- Wide temperature range 10-60°C
- For vertical and horizontal installation

TECHNICAL INFORMATION For an all electric towel rail/radiator, fluid filling must be purchased. Electric only elements will be fitted RH side unless otherwise specified. **Only suitable with Chrome T-Piece - 8.901 & Chrome Elbow - 41.3003.**

Elements

ELEMENT TYPE F D SHAPE CAP

ECODESIGN READY

WATER OR ROOM TEMPERATURE CONTROL



Chrome

Power	Length (mm)
150W	300
300W	340
600W	390
900W	440
1200W	470

Turbo Boost Function

For vertical installation only. Digital temp control element including remote control.

Element Type F With D Shape Cap - Chrome

Description	Colour	Code	€ Ex VAT	€ Inc VAT
150W Type F Element with D Shape Cap	Chrome	8.335	268.00	**329.64**
300W Type F Element with D Shape Cap	Chrome	8.315	437.00	**537.51**
600W Type F Element with D Shape Cap	Chrome	8.316	443.00	**544.89**
900W Type F Element with D Shape Cap	Chrome	8.336	296.00	**364.08**
1200W Type F Element with D Shape Cap	Chrome	8.337	301.00	**370.23**
Spare Remote Controller for Type F Element		8.319	89.00	**109.47**
Fluid filling for above rail (electric only)*	-	FF	164.00	**201.72**

*(not including appropriate element). I.P. rating 54. (Zone 2 and 3)
Please note all fluid filled rails are special order and are **non-returnable**.

FEATURES

- Comes with remote control, that acts as ambient temperature sensor.
- Turbo boost function
- Off season heating
- Cable connection cover included
- Daily & weekly programmable
- Low running costs, towel drying
- Smooth temperature adjustment (10°C to 65°C)
- Thermostat can control either water temperature or ambient room temperature
- Open window detection
- Eco Design ready
- Anti-Freeze function

TECHNICAL INFORMATION

For an all electric towel rail/radiator, fluid filling must be purchased. Electric only elements will be fitted RH side unless otherwise specified. **Suitable for electric only installation.**



Gloss White

Element Type F With D Shape Cap - Gloss White

Description	Colour	Code	€ Ex VAT	€ Inc VAT
150W Type F Element with D Shape Cap	Gloss White	8.338	247.00	**303.81**
300W Type F Element with D Shape Cap	Gloss White	8.313	415.00	**510.45**
600W Type F Element with D Shape Cap	Gloss White	8.314	420.00	**516.60**
900W Type F Element with D Shape Cap	Gloss White	8.339	275.00	**338.25**
1200W Type F Element with D Shape Cap	Gloss White	8.340	282.00	**346.86**
Spare Remote Controller for Type F Element		8.319	89.00	**109.47**
Fluid filling for above rail (electric only)*	-	FF	164.00	**201.72**

*(not including appropriate element). I.P. rating 54. (Zone 2 and 3)
Please note all fluid filled rails are special order and are **non-returnable**.



Matt White

Element Type F With D Shape Cap - Matt White

Description	Colour	Code	€ Ex VAT	€ Inc VAT
150W Type F Element with D Shape Cap	Matt White	8.341	282.00	**346.86**
300W Type F Element with D Shape Cap	Matt White	8.342	287.00	**353.01**
600W Type F Element with D Shape Cap	Matt White	8.343	301.00	**370.23**
900W Type F Element with D Shape Cap	Matt White	8.344	307.00	**377.61**
1200W Type F Element with D Shape Cap	Matt White	8.345	314.00	**386.22**
Spare Remote Controller for Type F Element		8.319	89.00	**109.47**
Fluid filling for above rail (electric only)*	-	FF	164.00	**201.72**

*(not including appropriate element). I.P. rating 54. (Zone 2 and 3)
Please note all fluid filled rails are special order and are **non-returnable**.



Matt Anthracite

Element Type F With D Shape Cap - Matt Anthracite

Description	Colour	Code	€ Ex VAT	€ Inc VAT
150W Type F Element with D Shape Cap	Matt Anthracite	8.346	282.00	**346.86**
300W Type F Element with D Shape Cap	Matt Anthracite	8.317	430.00	**528.90**
600W Type F Element with D Shape Cap	Matt Anthracite	8.318	437.00	**537.51**
900W Type F Element with D Shape Cap	Matt Anthracite	8.347	307.00	**377.61**
1200W Type F Element with D Shape Cap	Matt Anthracite	8.348	314.00	**386.22**
Spare Remote Controller for Type F Element		8.319	89.00	**109.47**
Fluid filling for above rail (electric only)*	-	FF	164.00	**201.72**

*(not including appropriate element). I.P. rating 54. (Zone 2 and 3)
Please note all fluid filled rails are special order and are **non-returnable**.

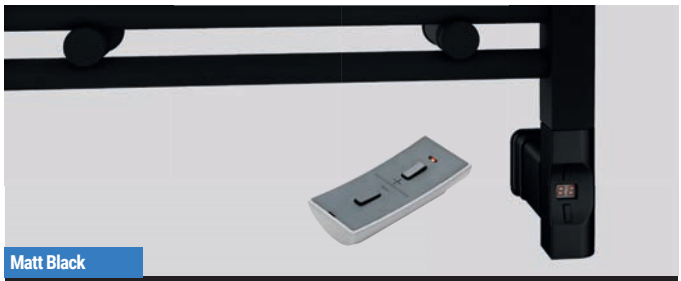

Matt Black

Element Type F With D Shape Cap - Matt Black

Description	Colour	Code	€ Ex VAT	€ Inc VAT
150W Type F Element with D Shape Cap	Matt Black	8.349	282.00	**346.86**
300W Type F Element with D Shape Cap	Matt Black	8.350	287.00	**353.01**
600W Type F Element with D Shape Cap	Matt Black	8.351	301.00	**370.23**
900W Type F Element with D Shape Cap	Matt Black	8.352	307.00	**377.61**
1200W Type F Element with D Shape Cap	Matt Black	8.353	314.00	**386.22**
Spare Remote Controller for Type F Element		8.319	89.00	**109.47**
Fluid filling for above rail (electric only)*	-	FF	164.00	**201.72**

*(not including appropriate element). I.P. rating 54. (Zone 2 and 3)
Please note all fluid filled rails are special order and are **non-returnable**.

Elements

Element Type F With Round Cap - Chrome

Description	Colour	Code	€ Ex VAT	€ Inc VAT
150W Type F Element with Round Cap	Chrome	8.354	268.00	**329.64**
300W Type F Element with Round Cap	Chrome	8.355	275.00	**338.25**
600W Type F Element with Round Cap	Chrome	8.356	287.00	**353.01**
900W Type F Element with Round Cap	Chrome	8.357	296.00	**364.08**
1200W Type F Element with Round Cap	Chrome	8.358	301.00	**370.23**
Spare Remote Controller for Type F Element		8.319	89.00	**109.47**
Fluid filling for above rail (electric only)*	-	FF	164.00	**201.72**

*(not including appropriate element). I.P. rating 54. (Zone 2 and 3)
Please note all fluid filled rails are special order and are **non-returnable**.

FEATURES

- Comes with remote control, that acts as ambient temperature sensor.
- Turbo boost function
- Off season heating
- Cable connection cover included
- Daily & weekly programmable
- Low running costs, towel drying
- Smooth temperature adjustment (10°C to 65°C)
- Thermostat can control either water temperature or ambient room temperature
- Open window detection
- Eco Design ready
- Anti-Freeze function

TECHNICAL INFORMATION

For an all electric towel rail/radiator, fluid filling must be purchased. Electric only elements will be fitted RH side unless otherwise specified. **Suitable for electric only installation.**

WATER OR ROOM TEMPERATURE CONTROL

ELEMENT TYPE F ROUND CAP

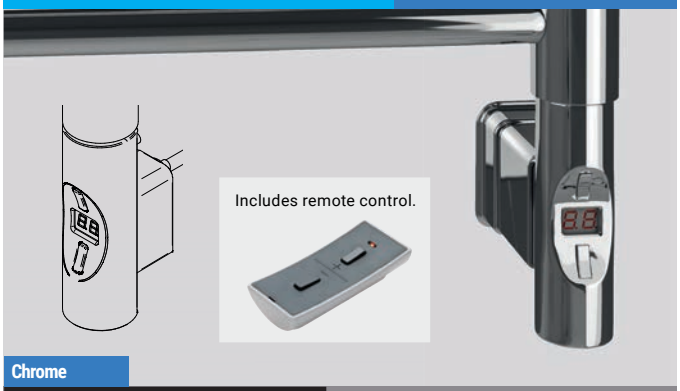

Chrome

Power	Length (mm)
150W	300
300W	340
600W	390
900W	440
1200W	470

Turbo Boost Function

For vertical installation only. Digital temp control element including remote control.



Gloss White

Element Type F With Round Cap - Gloss White

Description	Colour	Code	€ Ex VAT	€ Inc VAT
150W Type F Element with Round Cap	Gloss White	8.359	247.00	**303.81**
300W Type F Element with Round Cap	Gloss White	8.360	254.00	**312.42**
600W Type F Element with Round Cap	Gloss White	8.361	268.00	**329.64**
900W Type F Element with Round Cap	Gloss White	8.362	275.00	**338.25**
1200W Type F Element with Round Cap	Gloss White	8.363	282.00	**346.86**
Spare Remote Controller for Type F Element		8.319	89.00	**109.47**
Fluid filling for above rail (electric only)*	-	FF	164.00	**201.72**

*(not including appropriate element). I.P. rating 54. (Zone 2 and 3)
Please note all fluid filled rails are special order and are **non-returnable**.



Matt White

Element Type F With Round Cap - Matt White

Description	Colour	Code	€ Ex VAT	€ Inc VAT
150W Type F Element with Round Cap	Matt White	8.364	282.00	**346.86**
300W Type F Element with Round Cap	Matt White	8.365	287.00	**353.01**
600W Type F Element with Round Cap	Matt White	8.366	301.00	**370.23**
900W Type F Element with Round Cap	Matt White	8.367	307.00	**377.61**
1200W Type F Element with Round Cap	Matt White	8.368	314.00	**386.22**
Spare Remote Controller for Type F Element		8.319	89.00	**109.47**
Fluid filling for above rail (electric only)*	-	FF	164.00	**201.72**

*(not including appropriate element). I.P. rating 54. (Zone 2 and 3)
Please note all fluid filled rails are special order and are **non-returnable**.



Matt Anthracite

Element Type F With Round Cap - Matt Anthracite

Description	Colour	Code	€ Ex VAT	€ Inc VAT
150W Type F Element with Round Cap	Matt Anthracite	8.369	282.00	**346.86**
300W Type F Element with Round Cap	Matt Anthracite	8.370	287.00	**353.01**
600W Type F Element with Round Cap	Matt Anthracite	8.371	301.00	**370.23**
900W Type F Element with Round Cap	Matt Anthracite	8.372	307.00	**377.61**
1200W Type F Element with Round Cap	Matt Anthracite	8.373	314.00	**386.22**
Spare Remote Controller for Type F Element		8.319	89.00	**109.47**
Fluid filling for above rail (electric only)*	-	FF	164.00	**201.72**

*(not including appropriate element). I.P. rating 54. (Zone 2 and 3)
Please note all fluid filled rails are special order and are **non-returnable**.



Matt Black

Element Type F With Round Cap - Matt Black

Description	Colour	Code	€ Ex VAT	€ Inc VAT
150W Type F Element with Round Cap	Matt Black	8.374	282.00	**346.86**
300W Type F Element with Round Cap	Matt Black	8.375	287.00	**353.01**
600W Type F Element with Round Cap	Matt Black	8.376	301.00	**370.23**
900W Type F Element with Round Cap	Matt Black	8.377	307.00	**377.61**
1200W Type F Element with Round Cap	Matt Black	8.378	314.00	**386.22**
Spare Remote Controller for Type F Element		8.319	89.00	**109.47**
Fluid filling for above rail (electric only)*	-	FF	164.00	**201.72**

*(not including appropriate element). I.P. rating 54. (Zone 2 and 3)
Please note all fluid filled rails are special order and are **non-returnable**.

Elements

ELEMENT TYPE F SQUARE CAP

WATER OR ROOM TEMPERATURE CONTROL

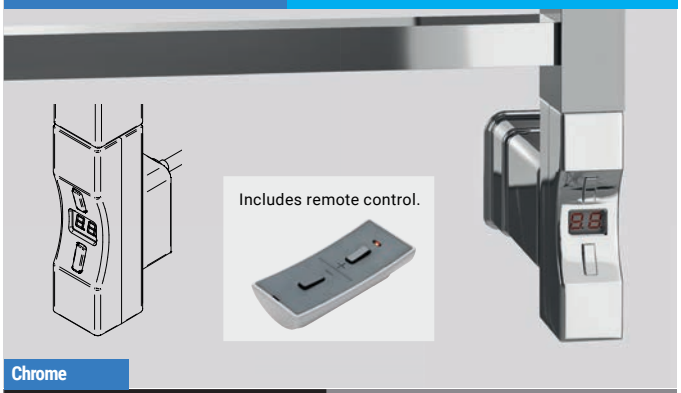

Chrome

Power	Length (mm)
150W	300
300W	340
600W	390
900W	440
1200W	470

Turbo Boost Function

For vertical installation only. Digital temp control element including remote control.

Element Type F With Square Cap - Chrome

Description	Colour	Code	€ Ex VAT	€ Inc VAT
150W Type F Element with Square Cap	Chrome	8.379	268.00	**329.64**
300W Type F Element with Square Cap	Chrome	8.380	275.00	**338.25**
600W Type F Element with Square Cap	Chrome	8.381	287.00	**353.01**
900W Type F Element with Square Cap	Chrome	8.382	296.00	**364.08**
1200W Type F Element with Square Cap	Chrome	8.383	301.00	**370.23**
Spare Remote Controller for Type F Element		8.319	89.00	**109.47**
Fluid filling for above rail (electric only)*	-	FF	164.00	**201.72**

*(not including appropriate element). I.P. rating 54. (Zone 2 and 3)
Please note all fluid filled rails are special order and are **non-returnable**.

FEATURES

- Comes with remote control, that acts as ambient temperature sensor.
- Turbo boost function
- Off season heating
- Cable connection cover included
- Daily & weekly programmable
- Low running costs, towel drying
- Smooth temperature adjustment (10°C to 65°C)
- Thermostat can control either water temperature or ambient room temperature
- Open window detection
- Eco Design ready
- Anti-Freeze function

TECHNICAL INFORMATION

For an all electric towel rail/radiator, fluid filling must be purchased. Electric only elements will be fitted RH side unless otherwise specified. **Suitable for electric only installation.**



Gloss White

Element Type F With Square Cap - Gloss White

Description	Colour	Code	€ Ex VAT	€ Inc VAT
150W Type F Element with Square Cap	Gloss White	8.384	247.00	**303.81**
300W Type F Element with Square Cap	Gloss White	8.385	254.00	**312.42**
600W Type F Element with Square Cap	Gloss White	8.386	268.00	**329.64**
900W Type F Element with Square Cap	Gloss White	8.387	275.00	**338.25**
1200W Type F Element with Square Cap	Gloss White	8.388	282.00	**346.86**
Spare Remote Controller for Type F Element		8.319	89.00	**109.47**
Fluid filling for above rail (electric only)*	-	FF	164.00	**201.72**

*(not including appropriate element). I.P. rating 54. (Zone 2 and 3)
Please note all fluid filled rails are special order and are **non-returnable**.



Matt White

Element Type F With Square Cap - Matt White

Description	Colour	Code	€ Ex VAT	€ Inc VAT
150W Type F Element with Square Cap	Matt White	8.389	282.00	**346.86**
300W Type F Element with Square Cap	Matt White	8.390	287.00	**353.01**
600W Type F Element with Square Cap	Matt White	8.391	301.00	**370.23**
900W Type F Element with Square Cap	Matt White	8.392	307.00	**377.61**
1200W Type F Element with Square Cap	Matt White	8.393	314.00	**386.22**
Spare Remote Controller for Type F Element		8.319	89.00	**109.47**
Fluid filling for above rail (electric only)*	-	FF	164.00	**201.72**

*(not including appropriate element). I.P. rating 54. (Zone 2 and 3)
Please note all fluid filled rails are special order and are **non-returnable**.



Matt Anthracite

Element Type F With Square Cap - Matt Anthracite

Description	Colour	Code	€ Ex VAT	€ Inc VAT
150W Type F Element with Square Cap	Matt Anthracite	8.394	282.00	**346.86**
300W Type F Element with Square Cap	Matt Anthracite	8.395	287.00	**353.01**
600W Type F Element with Square Cap	Matt Anthracite	8.396	301.00	**370.23**
900W Type F Element with Square Cap	Matt Anthracite	8.397	307.00	**377.61**
1200W Type F Element with Square Cap	Matt Anthracite	8.398	314.00	**386.22**
Spare Remote Controller for Type F Element		8.319	89.00	**109.47**
Fluid filling for above rail (electric only)*	-	FF	164.00	**201.72**

*(not including appropriate element). I.P. rating 54. (Zone 2 and 3)
Please note all fluid filled rails are special order and are **non-returnable**.



Matt Black

Element Type F With Square Cap - Matt Black

Description	Colour	Code	€ Ex VAT	€ Inc VAT
150W Type F Element with Square Cap	Matt Black	8.399	282.00	**346.86**
300W Type F Element with Square Cap	Matt Black	8.400	287.00	**353.01**
600W Type F Element with Square Cap	Matt Black	8.401	301.00	**370.23**
900W Type F Element with Square Cap	Matt Black	8.402	307.00	**377.61**
1200W Type F Element with Square Cap	Matt Black	8.403	314.00	**386.22**
Spare Remote Controller for Type F Element		8.319	89.00	**109.47**
Fluid filling for above rail (electric only)*	-	FF	164.00	**201.72**

*(not including appropriate element). I.P. rating 54. (Zone 2 and 3)
Please note all fluid filled rails are special order and are **non-returnable**.

Elements

Element Type F WiFi With D Shape Cap - Chrome

Description	Colour	Code	€ Ex VAT	€ Inc VAT
150W Type F Element Wi-Fi with D Shape Cap	Chrome	8.479	394.00	**484.62**
300W Type F Element Wi-Fi with D Shape Cap	Chrome	8.480	402.00	**494.46**
600W Type F Element Wi-Fi with D Shape Cap	Chrome	8.481	408.00	**501.84**
900W Type F Element Wi-Fi with D Shape Cap	Chrome	8.482	413.00	**507.99**
1200W Type F Element Wi-Fi with D Shape Cap	Chrome	8.483	422.00	**519.06**
Spare Remote Controller for Type F Element		8.319	89.00	**109.47**
Fluid filling for above rail (electric only)*	-	FF	164.00	**201.72**

*(not including appropriate element). I.P. rating 54. (Zone 2 and 3)
Please note all fluid filled rails are special order and are **non-returnable**.

FEATURES

- Wi-Fi & App Control.
- Comes with remote control, that acts as ambient temperature sensor.
- Turbo boost function.
- Off season heating.
- Cable connection cover included.
- Anti-Freeze function.
- Daily & weekly programmable.
- Low running costs, towel drying.
- Smooth temperature adjustment (10°C - 65°C)
- Thermostat can control either water temperature or ambient room temperature.
- Open window detection .
- Anti-Freeze function.
- Eco Design ready

TECHNICAL INFORMATION

For an all electric towel rail/radiator, fluid filling must be purchased. Electric only elements will be fitted RH side unless otherwise specified. **Suitable for electric only installation.**

WATER OR ROOM TEMPERATURE CONTROL

ECODESIGN READY

ELEMENT TYPE F WI-FI D SHAPE CAP

NEW



Chrome

Power	Length (mm)
150W	300
300W	340
600W	390
900W	440
1200W	470

Turbo Boost Function

For vertical installation only. Digital temp control element including remote control.

WI-FI SMARTPHONE APPLICATION

Your WI-FI Element has the option of programming the air temperature in the daily and weekly cycles and meets the requirements of the EcoDesign Directive (Lot 20) is compatible with the EcoDirective 2018 for electric elements.

Wi-Fi 2.4 GHz



Model is distinguished by modern design, equipped with an electronic controller with an LED display. Additionally, the model is equipped with a cover covering the electrical connection.

Download the "SUPLA" app from Google Play Store or Apple App Store.

Video instructions for the smartphone app available on our website.



Gloss White

Element Type F WiFi With D Shape Cap - Gloss White

Description	Colour	Code	€ Ex VAT	€ Inc VAT
150W Type F Element Wi-Fi with D Shape Cap	Gloss White	8.484	376.00	**462.48**
300W Type F Element Wi-Fi with D Shape Cap	Gloss White	8.485	384.00	**472.32**
600W Type F Element Wi-Fi with D Shape Cap	Gloss White	8.486	390.00	**479.70**
900W Type F Element Wi-Fi with D Shape Cap	Gloss White	8.487	402.00	**494.46**
1200W Type F Element Wi-Fi with D Shape Cap	Gloss White	8.488	411.00	**505.53**
Spare Remote Controller for Type F Element		8.319	89.00	**109.47**
Fluid filling for above rail (electric only)*	-	FF	164.00	**201.72**

*(not including appropriate element). I.P. rating 54. (Zone 2 and 3)
Please note all fluid filled rails are special order and are **non-returnable**.



Matt Anthracite

Element Type F WiFi With D Shape Cap - Matt Anthracite

Description	Colour	Code	€ Ex VAT	€ Inc VAT
150W Type F Element Wi-Fi with D Shape Cap	Matt Anthracite	8.489	406.00	**499.38**
300W Type F Element Wi-Fi with D Shape Cap	Matt Anthracite	8.490	415.00	**510.45**
600W Type F Element Wi-Fi with D Shape Cap	Matt Anthracite	8.491	420.00	**516.60**
900W Type F Element Wi-Fi with D Shape Cap	Matt Anthracite	8.492	433.00	**532.59**
1200W Type F Element Wi-Fi with D Shape Cap	Matt Anthracite	8.493	441.00	**542.43**
Spare Remote Controller for Type F Element		8.319	89.00	**109.47**
Fluid filling for above rail (electric only)*	-	FF	164.00	**201.72**

*(not including appropriate element). I.P. rating 54. (Zone 2 and 3)
Please note all fluid filled rails are special order and are **non-returnable**.



Matt Black

Element Type F WiFi With D Shape Cap - Matt Black

Description	Colour	Code	€ Ex VAT	€ Inc VAT
150W Type F Element Wi-Fi with D Shape Cap	Matt Black	8.494	406.00	**499.38**
300W Type F Element Wi-Fi with D Shape Cap	Matt Black	8.495	415.00	**510.45**
600W Type F Element Wi-Fi with D Shape Cap	Matt Black	8.496	420.00	**516.60**
900W Type F Element Wi-Fi with D Shape Cap	Matt Black	8.497	433.00	**532.59**
1200W Type F Element Wi-Fi with D Shape Cap	Matt Black	8.498	441.00	**542.43**
Spare Remote Controller for Type F Element		8.319	89.00	**109.47**
Fluid filling for above rail (electric only)*	-	FF	164.00	**201.72**

*(not including appropriate element). I.P. rating 54. (Zone 2 and 3)
Please note all fluid filled rails are special order and are **non-returnable**.

Elements

ELEMENT TYPE F WI-FI ROUND CAP

WATER OR ROOM TEMPERATURE CONTROL

ECODESIGN READY

NEW



Chrome

Power	Length (mm)
150W	300
300W	340
600W	390
900W	440
1200W	470

Turbo Boost Function

For vertical installation only. Digital temp control element including remote control.

Element Type F WiFi With Round Cap - Chrome

Description	Colour	Code	€ Ex VAT	€ Inc VAT
150W Type F Element Wi-Fi with Round Cap	Chrome	8.499	394.00	**484.62**
300W Type F Element Wi-Fi with Round Cap	Chrome	8.500	402.00	**494.46**
600W Type F Element Wi-Fi with Round Cap	Chrome	8.501	408.00	**501.84**
900W Type F Element Wi-Fi with Round Cap	Chrome	8.502	413.00	**507.99**
1200W Type F Element Wi-Fi with Round Cap	Chrome	8.503	422.00	**519.06**
Spare Remote Controller for Type F Element		8.319	89.00	**109.47**
Fluid filling for above rail (electric only)*	-	FF	164.00	**201.72**

*(not including appropriate element). I.P. rating 54. (Zone 2 and 3)
Please note all fluid filled rails are special order and are **non-returnable**.

FEATURES

- Wi-Fi & App Control.
- Comes with remote control, that acts as ambient temperature sensor.
- Turbo boost function.
- Off season heating.
- Cable connection cover included.
- Anti-Freeze function.
- Daily & weekly programmable.
- Low running costs, towel drying.
- Smooth temperature adjustment (10°C - 65°C)
- Thermostat can control either water temperature or ambient room temperature.
- Open window detection .
- Anti-Freeze function.
- Eco Design ready

TECHNICAL INFORMATION

For an all electric towel rail/radiator, fluid filling must be purchased. Electric only elements will be fitted RH side unless otherwise specified. **Suitable for electric only installation.**

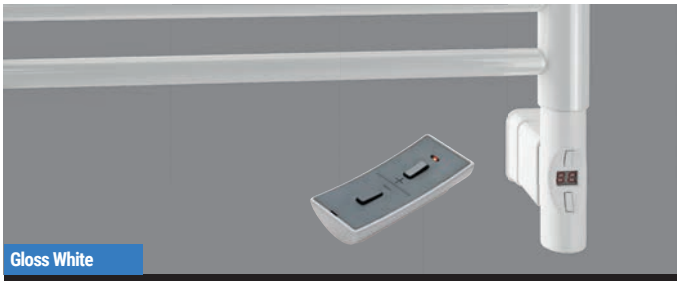

Gloss White

Element Type F WiFi With Round Cap - Gloss White

Description	Colour	Code	€ Ex VAT	€ Inc VAT
150W Type F Element Wi-Fi with Round Cap	Gloss White	8.504	376.00	**462.48**
300W Type F Element Wi-Fi with Round Cap	Gloss White	8.505	384.00	**472.32**
600W Type F Element Wi-Fi with Round Cap	Gloss White	8.506	390.00	**479.70**
900W Type F Element Wi-Fi with Round Cap	Gloss White	8.507	402.00	**494.46**
1200W Type F Element Wi-Fi with Round Cap	Gloss White	8.508	411.00	**505.53**
Spare Remote Controller for Type F Element		8.319	89.00	**109.47**
Fluid filling for above rail (electric only)*	-	FF	164.00	**201.72**

*(not including appropriate element). I.P. rating 54. (Zone 2 and 3)
Please note all fluid filled rails are special order and are **non-returnable**.

WI-FI SMARTPHONE APPLICATION

Your WIFI Element has the option of programming the air temperature in the daily and weekly cycles and meets the requirements of the EcoDesign Directive (Lot 20) is compatible with the EcoDirective 2018 for electric elements.

Wi-Fi 2.4 GHz



Model is distinguished by modern design, equipped with an electronic controller with an LED display. Additionally, the model is equipped with a cover covering the electrical connection.

Download the "SUPLA" app from Google Play Store or Apple App Store.

Video instructions for the smartphone app available on our website.

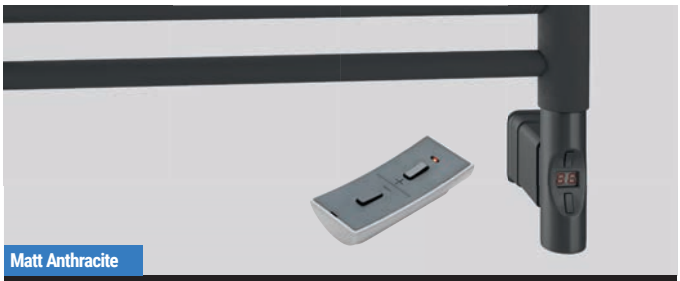

Matt Anthracite

Element Type F WiFi With Round Cap - Matt Anthracite

Description	Colour	Code	€ Ex VAT	€ Inc VAT
150W Type F Element Wi-Fi with Round Cap	Matt Anthracite	8.509	406.00	**499.38**
300W Type F Element Wi-Fi with Round Cap	Matt Anthracite	8.510	415.00	**510.45**
600W Type F Element Wi-Fi with Round Cap	Matt Anthracite	8.511	420.00	**516.60**
900W Type F Element Wi-Fi with Round Cap	Matt Anthracite	8.512	433.00	**532.59**
1200W Type F Element Wi-Fi with Round Cap	Matt Anthracite	8.513	441.00	**542.43**
Spare Remote Controller for Type F Element		8.319	89.00	**109.47**
Fluid filling for above rail (electric only)*	-	FF	164.00	**201.72**

*(not including appropriate element). I.P. rating 54. (Zone 2 and 3)
Please note all fluid filled rails are special order and are **non-returnable**.



Matt Black

Element Type F WiFi With Round Cap - Matt Black

Description	Colour	Code	€ Ex VAT	€ Inc VAT
150W Type F Element Wi-Fi with Round Cap	Matt Black	8.514	406.00	**499.38**
300W Type F Element Wi-Fi with Round Cap	Matt Black	8.515	415.00	**510.45**
600W Type F Element Wi-Fi with Round Cap	Matt Black	8.516	420.00	**516.60**
900W Type F Element Wi-Fi with Round Cap	Matt Black	8.517	433.00	**532.59**
1200W Type F Element Wi-Fi with Round Cap	Matt Black	8.518	441.00	**542.43**
Spare Remote Controller for Type F Element		8.319	89.00	**109.47**
Fluid filling for above rail (electric only)*	-	FF	164.00	**201.72**

*(not including appropriate element). I.P. rating 54. (Zone 2 and 3)
Please note all fluid filled rails are special order and are **non-returnable**.

Elements

Element Type F WiFi With Square Cap - Chrome

Description	Colour	Code	€ Ex VAT	€ Inc VAT
150W Type F Element Wi-Fi with Square Cap	Chrome	8.519	394.00	**484.62**
300W Type F Element Wi-Fi with Square Cap	Chrome	8.520	402.00	**494.46**
600W Type F Element Wi-Fi with Square Cap	Chrome	8.521	408.00	**501.84**
900W Type F Element Wi-Fi with Square Cap	Chrome	8.522	413.00	**507.99**
1200W Type F Element Wi-Fi with Square Cap	Chrome	8.523	422.00	**519.06**
Spare Remote Controller for Type F Element		8.319	89.00	**109.47**
Fluid filling for above rail (electric only)*	-	FF	164.00	**201.72**

*(not including appropriate element). I.P. rating 54. (Zone 2 and 3)
Please note all fluid filled rails are special order and are **non-returnable**.

FEATURES

- Wi-Fi & App Control.
- Comes with remote control, that acts as ambient temperature sensor.
- Turbo boost function.
- Off season heating.
- Cable connection cover included.
- Anti-Freeze function.
- Daily & weekly programmable.
- Low running costs, towel drying.
- Smooth temperature adjustment (10°C - 65°C)
- Thermostat can control either water temperature or ambient room temperature.
- Open window detection .
- Anti-Freeze function.
- Eco Design ready

TECHNICAL INFORMATION

For an all electric towel rail/radiator, fluid filling must be purchased. Electric only elements will be fitted RH side unless otherwise specified. Suitable for electric only installation.

WI-FI SMARTPHONE APPLICATION

Your WIFI Element has the option of programming the air temperature in the daily and weekly cycles and meets the requirements of the EcoDesign Directive (Lot 20) is compatible with the EcoDirective 2018 for electric elements.

Wi-Fi 2.4 GHz



Model is distinguished by modern design, equipped with an electronic controller with an LED display. Additionally, the model is equipped with a cover covering the electrical connection.

Download the "SUPLA" app from Google Play Store or Apple App Store.

Video instructions for the smartphone app available on our website.

WATER OR ROOM TEMPERATURE CONTROL

ECODESIGN READY

ELEMENT TYPE F WI-FI SQUARE CAP

NEW



Chrome

Power	Length (mm)
150W	300
300W	340
600W	390
900W	440
1200W	470

Turbo Boost Function

For vertical installation only. Digital temp control element including remote control.

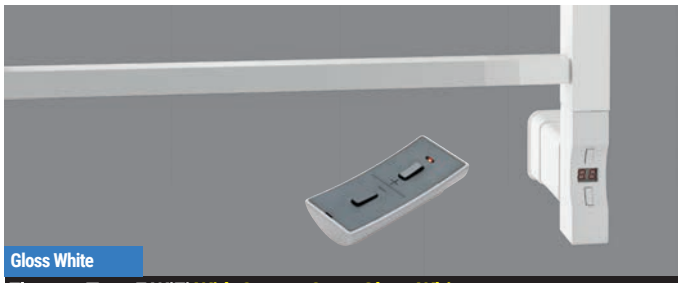

Gloss White

Element Type F WiFi With Square Cap - Gloss White

Description	Colour	Code	€ Ex VAT	€ Inc VAT
150W Type F Element Wi-Fi with Square Cap	Gloss White	8.524	376.00	**462.48**
300W Type F Element Wi-Fi with Square Cap	Gloss White	8.525	384.00	**472.32**
600W Type F Element Wi-Fi with Square Cap	Gloss White	8.526	390.00	**479.70**
900W Type F Element Wi-Fi with Square Cap	Gloss White	8.527	402.00	**494.46**
1200W Type F Element Wi-Fi with Square Cap	Gloss White	8.528	411.00	**505.53**
Spare Remote Controller for Type F Element		8.319	89.00	**109.47**
Fluid filling for above rail (electric only)*	-	FF	164.00	**201.72**

*(not including appropriate element). I.P. rating 54. (Zone 2 and 3)
Please note all fluid filled rails are special order and are **non-returnable**.



Matt Anthracite

Element Type F WiFi With Square Cap - Matt Anthracite

Description	Colour	Code	€ Ex VAT	€ Inc VAT
150W Type F Element Wi-Fi with Square Cap	Matt Anthracite	8.529	406.00	**499.38**
300W Type F Element Wi-Fi with Square Cap	Matt Anthracite	8.530	415.00	**510.45**
600W Type F Element Wi-Fi with Square Cap	Matt Anthracite	8.531	420.00	**516.60**
900W Type F Element Wi-Fi with Square Cap	Matt Anthracite	8.532	433.00	**532.59**
1200W Type F Element Wi-Fi with Square Cap	Matt Anthracite	8.533	441.00	**542.43**
Spare Remote Controller for Type F Element		8.319	89.00	**109.47**
Fluid filling for above rail (electric only)*	-	FF	164.00	**201.72**

*(not including appropriate element). I.P. rating 54. (Zone 2 and 3)
Please note all fluid filled rails are special order and are **non-returnable**.



Matt Black

Element Type F WiFi With Square Cap - Matt Black

Description	Colour	Code	€ Ex VAT	€ Inc VAT
150W Type F Element Wi-Fi with Square Cap	Matt Black	8.534	406.00	**499.38**
300W Type F Element Wi-Fi with Square Cap	Matt Black	8.535	415.00	**510.45**
600W Type F Element Wi-Fi with Square Cap	Matt Black	8.536	420.00	**516.60**
900W Type F Element Wi-Fi with Square Cap	Matt Black	8.537	433.00	**532.59**
1200W Type F Element Wi-Fi with Square Cap	Matt Black	8.538	441.00	**542.43**
Spare Remote Controller for Type F Element		8.319	89.00	**109.47**
Fluid filling for above rail (electric only)*	-	FF	164.00	**201.72**

*(not including appropriate element). I.P. rating 54. (Zone 2 and 3)
Please note all fluid filled rails are special order and are **non-returnable**.

Elements

ELEMENT TYPE G WITH D SHAPE CAP

WATER TEMPERATURE CONTROL

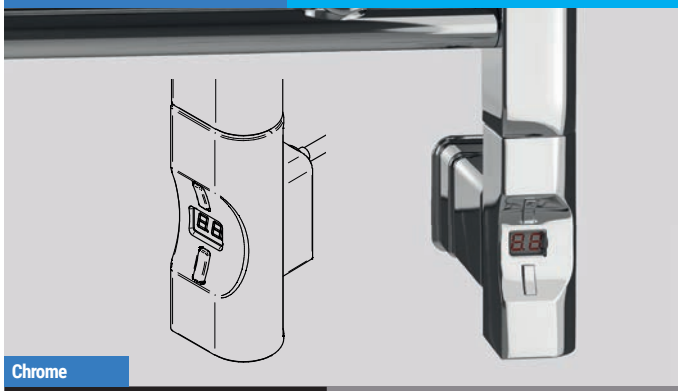

Chrome

Power	Length (mm)
150W	300
300W	340
600W	390
900W	440
1200W	470

Turbo Boost Function

For vertical installation only.
Digital temp control element.

Element Type G With D Shape Cap - Chrome

Description	Colour	Code	€ Ex VAT	€ Inc VAT
150W Type G Element with D Shape Cap	Chrome	8.404	227.00	**279.21**
300W Type G Element with D Shape Cap	Chrome	8.405	236.00	**290.28**
600W Type G Element with D Shape Cap	Chrome	8.406	247.00	**303.81**
900W Type G Element with D Shape Cap	Chrome	8.407	259.00	**318.57**
1200W Type G Element with D Shape Cap	Chrome	8.408	268.00	**329.64**
Fluid filling for above rail (electric only)*	-	FF	164.00	**201.72**

*(not including appropriate element). I.P. rating 54. (Zone 2 and 3)
Please note all fluid filled rails are special order and are **non-returnable**.

FEATURES

- Timer 1-9 hour
- Turbo boost function
- Off season heating
- Cable connection cover included
- Anti-Freeze function
- Maintains previously selected temperature for a period of 1-9 hours
- Low running costs, towel drying
- Smooth temperature adjustment (10°C to 65°C)
- Water temperature controlled Thermostat

TECHNICAL INFORMATION

For an all electric towel rail/radiator, fluid filling must be purchased. Electric only elements will be fitted RH side unless otherwise specified. Suitable for electric only installation.



Gloss White

Element Type G With D Shape Cap - Gloss White

Description	Colour	Code	€ Ex VAT	€ Inc VAT
150W Type G Element with D Shape Cap	Gloss White	8.409	215.00	**264.45**
300W Type G Element with D Shape Cap	Gloss White	8.410	222.00	**273.06**
600W Type G Element with D Shape Cap	Gloss White	8.411	236.00	**290.28**
900W Type G Element with D Shape Cap	Gloss White	8.412	241.00	**296.43**
1200W Type G Element with D Shape Cap	Gloss White	8.413	247.00	**303.81**
Fluid filling for above rail (electric only)*	-	FF	164.00	**201.72**

*(not including appropriate element). I.P. rating 54. (Zone 2 and 3)
Please note all fluid filled rails are special order and are **non-returnable**.



Matt White

Element Type G With D Shape Cap - Matt White

Description	Colour	Code	€ Ex VAT	€ Inc VAT
150W Type G Element with D Shape Cap	Matt White	8.414	247.00	**303.81**
300W Type G Element with D Shape Cap	Matt White	8.415	254.00	**312.42**
600W Type G Element with D Shape Cap	Matt White	8.416	268.00	**329.64**
900W Type G Element with D Shape Cap	Matt White	8.417	275.00	**338.25**
1200W Type G Element with D Shape Cap	Matt White	8.418	282.00	**346.86**
Fluid filling for above rail (electric only)*	-	FF	164.00	**201.72**

*(not including appropriate element). I.P. rating 54. (Zone 2 and 3)
Please note all fluid filled rails are special order and are **non-returnable**.



Matt Anthracite

Element Type G With D Shape Cap - Matt Anthracite

Description	Colour	Code	€ Ex VAT	€ Inc VAT
150W Type G Element with D Shape Cap	Matt Anthracite	8.419	247.00	**303.81**
300W Type G Element with D Shape Cap	Matt Anthracite	8.420	254.00	**312.42**
600W Type G Element with D Shape Cap	Matt Anthracite	8.421	268.00	**329.64**
900W Type G Element with D Shape Cap	Matt Anthracite	8.422	275.00	**338.25**
1200W Type G Element with D Shape Cap	Matt Anthracite	8.423	282.00	**346.86**
Fluid filling for above rail (electric only)*	-	FF	164.00	**201.72**

*(not including appropriate element). I.P. rating 54. (Zone 2 and 3)
Please note all fluid filled rails are special order and are **non-returnable**.

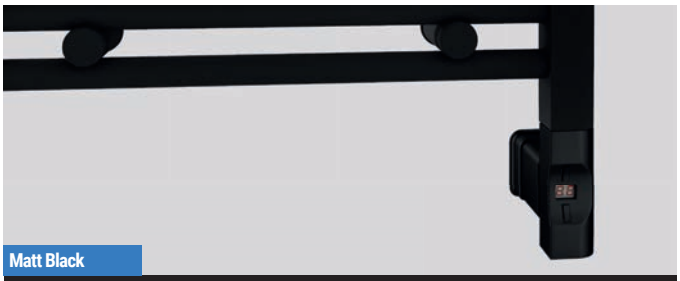

Matt Black

Element Type G With D Shape Cap - Matt Black

Description	Colour	Code	€ Ex VAT	€ Inc VAT
150W Type G Element with D Shape Cap	Matt Black	8.424	247.00	**303.81**
300W Type G Element with D Shape Cap	Matt Black	8.425	254.00	**312.42**
600W Type G Element with D Shape Cap	Matt Black	8.426	268.00	**329.64**
900W Type G Element with D Shape Cap	Matt Black	8.427	275.00	**338.25**
1200W Type G Element with D Shape Cap	Matt Black	8.428	282.00	**346.86**
Fluid filling for above rail (electric only)*	-	FF	164.00	**201.72**

*(not including appropriate element). I.P. rating 54. (Zone 2 and 3)
Please note all fluid filled rails are special order and are **non-returnable**.

Elements

Element Type G With Round Cap - Chrome

Description	Colour	Code	€ Ex VAT	€ Inc VAT
150W Type G Element with Round Cap	Chrome	8.429	227.00	**279.21**
300W Type G Element with Round Cap	Chrome	8.430	236.00	**290.28**
600W Type G Element with Round Cap	Chrome	8.431	247.00	**303.81**
900W Type G Element with Round Cap	Chrome	8.432	259.00	**318.57**
1200W Type G Element with Round Cap	Chrome	8.433	268.00	**329.64**
Fluid filling for above rail (electric only)*	-	FF	164.00	**201.72**

*(not including appropriate element). I.P. rating 54. (Zone 2 and 3)
Please note all fluid filled rails are special order and are **non-returnable**.

FEATURES

- Timer 1-9 hour
- Turbo boost function
- Off season heating
- Cable connection cover included
- Anti-Freeze function
- Maintains previously selected temperature for a period of 1-9 hours
- Low running costs, towel drying
- Smooth temperature adjustment (10°C to 65°C)
- Water temperature controlled Thermostat

TECHNICAL INFORMATION

For an all electric towel rail/radiator, fluid filling must be purchased. Electric only elements will be fitted RH side unless otherwise specified. Suitable for electric only installation.

ELEMENT TYPE G WITH ROUND CAP — WATER TEMPERATURE CONTROL



Chrome

Power	Length (mm)
150W	300
300W	340
600W	390
900W	440
1200W	470

Turbo Boost Function

For vertical installation only.
Digital temp control element.



Gloss White

Element Type G With Round Cap - Gloss White

Description	Colour	Code	€ Ex VAT	€ Inc VAT
150W Type G Element with Round Cap	Gloss White	8.434	215.00	**264.45**
300W Type G Element with Round Cap	Gloss White	8.435	222.00	**273.06**
600W Type G Element with Round Cap	Gloss White	8.436	236.00	**290.28**
900W Type G Element with Round Cap	Gloss White	8.437	241.00	**296.43**
1200W Type G Element with Round Cap	Gloss White	8.438	247.00	**303.81**
Fluid filling for above rail (electric only)*	-	FF	164.00	**201.72**

*(not including appropriate element). I.P. rating 54. (Zone 2 and 3)
Please note all fluid filled rails are special order and are **non-returnable**.



Matt White

Element Type G With Round Cap - Matt White

Description	Colour	Code	€ Ex VAT	€ Inc VAT
150W Type G Element with Round Cap	Matt White	8.439	247.00	**303.81**
300W Type G Element with Round Cap	Matt White	8.440	254.00	**312.42**
600W Type G Element with Round Cap	Matt White	8.441	268.00	**329.64**
900W Type G Element with Round Cap	Matt White	8.442	275.00	**338.25**
1200W Type G Element with Round Cap	Matt White	8.443	282.00	**346.86**
Fluid filling for above rail (electric only)*	-	FF	164.00	**201.72**

*(not including appropriate element). I.P. rating 54. (Zone 2 and 3)
Please note all fluid filled rails are special order and are **non-returnable**.

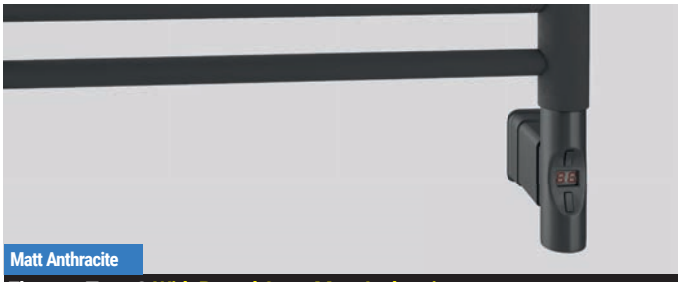

Matt Anthracite

Element Type G With Round Cap - Matt Anthracite

Description	Colour	Code	€ Ex VAT	€ Inc VAT
150W Type G Element with Round Cap	Matt Anthracite	8.444	247.00	**303.81**
300W Type G Element with Round Cap	Matt Anthracite	8.445	254.00	**312.42**
600W Type G Element with Round Cap	Matt Anthracite	8.446	268.00	**329.64**
900W Type G Element with Round Cap	Matt Anthracite	8.447	275.00	**338.25**
1200W Type G Element with Round Cap	Matt Anthracite	8.448	282.00	**346.86**
Fluid filling for above rail (electric only)*	-	FF	164.00	**201.72**

*(not including appropriate element). I.P. rating 54. (Zone 2 and 3)
Please note all fluid filled rails are special order and are **non-returnable**.

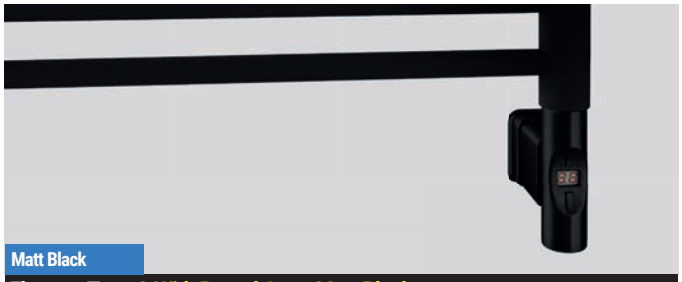

Matt Black

Element Type G With Round Cap - Matt Black

Description	Colour	Code	€ Ex VAT	€ Inc VAT
150W Type G Element with Round Cap	Matt Black	8.449	247.00	**303.81**
300W Type G Element with Round Cap	Matt Black	8.450	254.00	**312.42**
600W Type G Element with Round Cap	Matt Black	8.451	268.00	**329.64**
900W Type G Element with Round Cap	Matt Black	8.452	275.00	**338.25**
1200W Type G Element with Round Cap	Matt Black	8.453	282.00	**346.86**
Fluid filling for above rail (electric only)*	-	FF	164.00	**201.72**

*(not including appropriate element). I.P. rating 54. (Zone 2 and 3)
Please note all fluid filled rails are special order and are **non-returnable**.

Elements

ELEMENT TYPE G WITH SQUARE CAP

WATER TEMPERATURE CONTROL

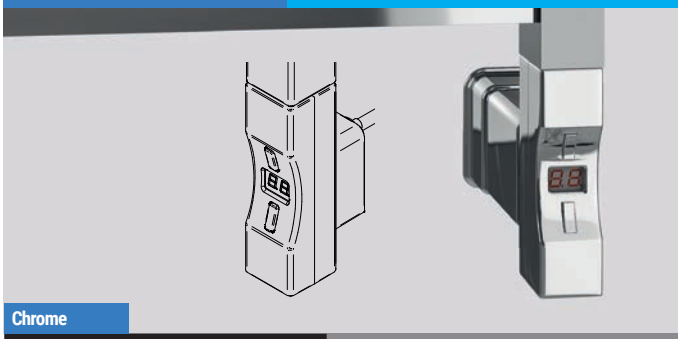

Chrome

Power	Length (mm)
150W	300
300W	340
600W	390
900W	440
1200W	470

Turbo Boost Function

For vertical installation only.
Digital temp control element.

Element Type G With Square Cap - Chrome

Description	Colour	Code	€ Ex VAT	€ Inc VAT
150W Type G Element with Square Cap	Chrome	8.454	227.00	**279.21**
300W Type G Element with Square Cap	Chrome	8.455	236.00	**290.28**
600W Type G Element with Square Cap	Chrome	8.456	247.00	**303.81**
900W Type G Element with Square Cap	Chrome	8.457	259.00	**318.57**
1200W Type G Element with Square Cap	Chrome	8.458	268.00	**329.64**
Fluid filling for above rail (electric only)*	-	FF	164.00	**201.72**

*(not including appropriate element). I.P. rating 54. (Zone 2 and 3)
Please note all fluid filled rails are special order and are **non-returnable**.

FEATURES

- Timer 1-9 hour
- Turbo boost function
- Off season heating
- Cable connection cover included
- Anti-Freeze function
- Maintains previously selected temperature for a period of 1-9 hours
- Low running costs, towel drying
- Smooth temperature adjustment (10°C to 65°C)
- Water temperature controlled Thermostat

TECHNICAL INFORMATION

For an all electric towel rail/radiator, fluid filling must be purchased. Electric only elements will be fitted RH side unless otherwise specified. Suitable for electric only installation.



Gloss White

Element Type G With Square Cap - Gloss White

Description	Colour	Code	€ Ex VAT	€ Inc VAT
150W Type G Element with Square Cap	Gloss White	8.459	215.00	**264.45**
300W Type G Element with Square Cap	Gloss White	8.460	222.00	**273.06**
600W Type G Element with Square Cap	Gloss White	8.461	236.00	**290.28**
900W Type G Element with Square Cap	Gloss White	8.462	241.00	**296.43**
1200W Type G Element with Square Cap	Gloss White	8.463	247.00	**303.81**
Fluid filling for above rail (electric only)*	-	FF	164.00	**201.72**

*(not including appropriate element). I.P. rating 54. (Zone 2 and 3)
Please note all fluid filled rails are special order and are **non-returnable**.



Matt White

Element Type G With Square Cap - Matt White

Description	Colour	Code	€ Ex VAT	€ Inc VAT
150W Type G Element with Square Cap	Matt White	8.464	247.00	**303.81**
300W Type G Element with Square Cap	Matt White	8.465	254.00	**312.42**
600W Type G Element with Square Cap	Matt White	8.466	268.00	**329.64**
900W Type G Element with Square Cap	Matt White	8.467	275.00	**338.25**
1200W Type G Element with Square Cap	Matt White	8.468	282.00	**346.86**
Fluid filling for above rail (electric only)*	-	FF	164.00	**201.72**

*(not including appropriate element). I.P. rating 54. (Zone 2 and 3)
Please note all fluid filled rails are special order and are **non-returnable**.



Matt Anthracite

Element Type G With Square Cap - Matt Anthracite

Description	Colour	Code	€ Ex VAT	€ Inc VAT
150W Type G Element with Square Cap	Matt Anthracite	8.469	247.00	**303.81**
300W Type G Element with Square Cap	Matt Anthracite	8.470	254.00	**312.42**
600W Type G Element with Square Cap	Matt Anthracite	8.471	268.00	**329.64**
900W Type G Element with Square Cap	Matt Anthracite	8.472	275.00	**338.25**
1200W Type G Element with Square Cap	Matt Anthracite	8.473	282.00	**346.86**
Fluid filling for above rail (electric only)*	-	FF	164.00	**201.72**

*(not including appropriate element). I.P. rating 54. (Zone 2 and 3)
Please note all fluid filled rails are special order and are **non-returnable**.



Matt Black

Element Type G With Square Cap - Matt Black

Description	Colour	Code	€ Ex VAT	€ Inc VAT
150W Type G Element with Square Cap	Matt Black	8.474	247.00	**303.81**
300W Type G Element with Square Cap	Matt Black	8.475	254.00	**312.42**
600W Type G Element with Square Cap	Matt Black	8.476	268.00	**329.64**
900W Type G Element with Square Cap	Matt Black	8.477	275.00	**338.25**
1200W Type G Element with Square Cap	Matt Black	8.478	282.00	**346.86**
Fluid filling for above rail (electric only)*	-	FF	164.00	**201.72**

*(not including appropriate element). I.P. rating 54. (Zone 2 and 3)
Please note all fluid filled rails are special order and are **non-returnable**.

All Eastbrook fluid filled rails are filled with Fernox HP-5.
With over 40 years experience and continual investment in research and development, Fernox water treatment products are manufactured to the highest quality, reliability and performance. Fernox HP-5 is a pre-blended heat transfer fluid which gives a frost protection down to -5°C. It also provides long-term protection from damage caused by corrosion, limescale and bacteria and maintains a stable pH across a range of operational temperatures.

FEATURES - FERNOX

- Anti-cavitation (lower noise)
- Better heat transfer
- Anti-corrosion properties
- Anti-freeze

FERNOX MAKES WATER WORK

Elements

WATER OR ROOM TEMPERATURE CONTROL

FEATURES
- Turbo boost function (full heating for a set period 1, 2 or 3 hours)
- Off season heating
- Anti-Freeze function
- Low running costs
- Eco Design ready
- Smooth temperature adjustment (10°C to 65°C)
- Comes with remote control, that acts as ambient temperature sensor
- Thermostat can control either water temperature or ambient room temperature
- Can be fitted on LH or RH side by 180°C rotating thermostat

TECHNICAL INFORMATION

For an all electric towel rail/radiator, fluid filling must be purchased. Electric only elements will be fitted RH side unless otherwise specified. **Only suitable with Chrome T-Piece - 8.901 & Chrome Elbow - 41.3003.**

ELEMENT TYPE H HORIZONTAL

Power	Length (mm)
300W	340
600W	390
900W	440
1200W	470

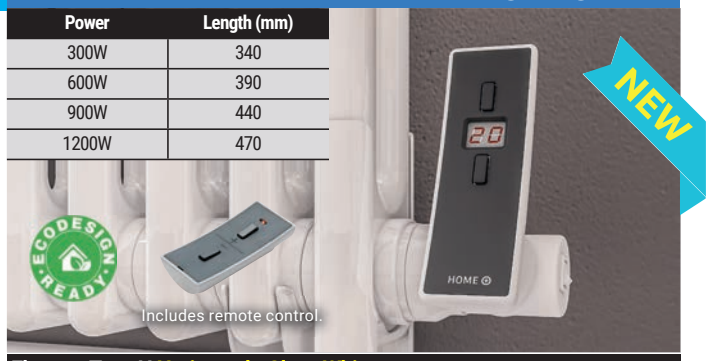

Element Type H Horizontal - Chrome

Description	Colour	Code	€ Ex VAT	€ Inc VAT
300W Type H Element Horizontal**	Chrome	8.554	404.00	**496.92**
600W Type H Element Horizontal**	Chrome	8.555	411.00	**505.53**
900W Type H Element Horizontal**	Chrome	8.556	416.00	**511.68**
1200W Type H Element Horizontal**	Chrome	8.557	423.00	**520.29**
Fluid filling for above rail (electric only)*	-	FF	164.00	**201.72**

Element Type H Horizontal - Gloss White

Description	Colour	Code	€ Ex VAT	€ Inc VAT
300W Type H Element Horizontal**	Gloss White	8.539	371.00	**456.33**
600W Type H Element Horizontal**	Gloss White	8.540	377.00	**463.71**
900W Type H Element Horizontal**	Gloss White	8.541	384.00	**472.32**
1200W Type H Element Horizontal**	Gloss White	8.542	390.00	**479.70**
Fluid filling for above rail (electric only)*	-	FF	164.00	**201.72**

Element Type H Horizontal - Matt Anthracite

Description	Colour	Code	€ Ex VAT	€ Inc VAT
300W Type H Element Horizontal**	Matt Anthracite	8.544	398.00	**489.54**
600W Type H Element Horizontal**	Matt Anthracite	8.545	404.00	**496.92**
900W Type H Element Horizontal**	Matt Anthracite	8.546	411.00	**505.53**
1200W Type H Element Horizontal**	Matt Anthracite	8.547	416.00	**511.68**
Fluid filling for above rail (electric only)*	-	FF	164.00	**201.72**

Element Type H Horizontal - Matt Black

Description	Colour	Code	€ Ex VAT	€ Inc VAT
300W Type H Element Horizontal**	Matt Black	8.549	398.00	**489.54**
600W Type H Element Horizontal**	Matt Black	8.550	404.00	**496.92**
900W Type H Element Horizontal**	Matt Black	8.551	411.00	**505.53**
1200W Type H Element Horizontal**	Matt Black	8.552	416.00	**511.68**
Fluid filling for above rail (electric only)*	-	FF	164.00	**201.72**

*(not including appropriate element, for all colours). I.P. rating 54. (Zone 2 and 3) Please note all fluid filled rails are special order and are **non-returnable**.
**Available February 2023

WATER OR ROOM TEMPERATURE CONTROL

FEATURES
- Turbo boost function (full heating for a set period 1, 2 or 3 hours)
- Off season heating
- Anti-Freeze function
- Low running costs
- Eco Design ready
- Smooth temperature adjustment (10°C to 65°C)
- Wi-Fi & App Control
- Comes with remote control, that acts as ambient temperature sensor
- Thermostat can control either water temperature or ambient room temperature
- Can be fitted on LH or RH side by 180°C rotating thermostat

TECHNICAL INFORMATION

For an all electric towel rail/radiator, fluid filling must be purchased. Electric only elements will be fitted RH side unless otherwise specified. **Only suitable with Chrome T-Piece - 8.901 & Chrome Elbow - 41.3003.**

ELEMENT TYPE H WI-FI HORIZONTAL

Power	Length (mm)
300W	340
600W	390
900W	440
1200W	470

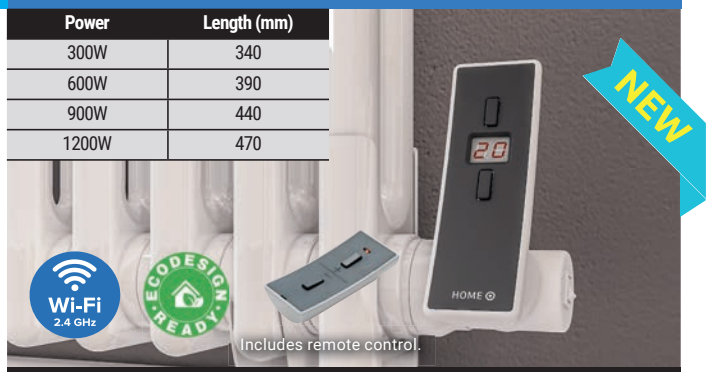

Element Type H Wi-Fi Horizontal - Chrome

Description	Colour	Code	€ Ex VAT	€ Inc VAT
300W Type H Element Wi-Fi Horizontal**	Chrome	8.574	454.00	**558.42**
600W Type H Element Wi-Fi Horizontal**	Chrome	8.575	460.00	**565.80**
900W Type H Element Wi-Fi Horizontal**	Chrome	8.576	467.00	**574.41**
1200W Type H Element Wi-Fi Horizontal**	Chrome	8.577	472.00	**580.56**
Fluid filling for above rail (electric only)*	-	FF	164.00	**201.72**

Element Type H Wi-Fi Horizontal - Gloss White

Description	Colour	Code	€ Ex VAT	€ Inc VAT
300W Type H Element Wi-Fi Horizontal**	Gloss White	8.559	420.00	**516.60**
600W Type H Element Wi-Fi Horizontal**	Gloss White	8.560	427.00	**525.21**
900W Type H Element Wi-Fi Horizontal**	Gloss White	8.561	433.00	**532.59**
1200W Type H Element Wi-Fi Horizontal**	Gloss White	8.562	440.00	**541.20**
Fluid filling for above rail (electric only)*	-	FF	164.00	**201.72**

Element Type H Wi-Fi Horizontal - Matt Anthracite

Description	Colour	Code	€ Ex VAT	€ Inc VAT
300W Type H Element Wi-Fi Horizontal**	Matt Anthracite	8.564	447.00	**549.81**
600W Type H Element Wi-Fi Horizontal**	Matt Anthracite	8.565	454.00	**558.42**
900W Type H Element Wi-Fi Horizontal**	Matt Anthracite	8.566	460.00	**565.80**
1200W Type H Element Wi-Fi Horizontal**	Matt Anthracite	8.567	467.00	**574.41**
Fluid filling for above rail (electric only)*	-	FF	164.00	**201.72**

Element Type H Wi-Fi Horizontal - Matt Black

Description	Colour	Code	€ Ex VAT	€ Inc VAT
300W Type H Element Wi-Fi Horizontal**	Matt Black	8.569	447.00	**549.81**
600W Type H Element Wi-Fi Horizontal**	Matt Black	8.570	454.00	**558.42**
900W Type H Element Wi-Fi Horizontal**	Matt Black	8.571	460.00	**565.80**
1200W Type H Element Wi-Fi Horizontal**	Matt Black	8.572	467.00	**574.41**
Fluid filling for above rail (electric only)*	-	FF	164.00	**201.72**

*(not including appropriate element, for all colours). I.P. rating 54. (Zone 2 and 3) Please note all fluid filled rails are special order and are **non-returnable**.
**Available February 2023

WI-FI SMARTPHONE APPLICATION



Your WIFI Element has the option of programming the air temperature in the daily and weekly cycles and meets the requirements of the EcoDesign Directive (Lot 20) is compatible with the EcoDirective 2018 for electric elements.

Download the "SUPLA" app from Google Play Store or Apple App Store.
Video instructions for the smartphone app available on our website.

Crafton Control Plate & Thermostatic Valves

CRAFTON TEMPERATURE CONTROL PANEL

Additional Chrome Cover 67.0005



Crafton Temperature Control Panel

Description	Code	€ Ex VAT	€ Inc VAT
Crafton Temperature Control Plate White	67.0004	150.00	**184.50**
Crafton Temperature Control Plate Chrome Cover	67.0005	51.00	**62.73**

FEATURES
- Can be fitted in the bathroom (Zone 2 rated)
- IPX5 rated
- Active LED display
- 2 hour boost function
- Low running costs
- Wattage range 100-1000 watts
- 20-100% output control
- Can be used on dual fuel and electric only installations
- **Can only be fitted with Type A+, Type A Element and Biava Dry Element towel rail**
- Will fit all standard electrical back boxes

Dual Fuel - Element T Pieces & Elbows



Dual Fuel Elbows

Description	Code	€ Ex VAT	€ Inc VAT
Elbow Chrome	41.3003	23.00	**28.29**
Elbow Matt White	41.4040	26.00	**31.98**
Elbow Matt Grey	41.4041	26.00	**31.98**
Elbow Matt Cappuccino	41.4042	26.00	**31.98**
Elbow Matt Anthracite	41.4043	26.00	**31.98**
Elbow Matt Black	41.4044	26.00	**31.98**

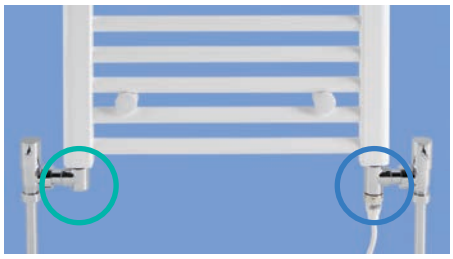

Duel Fuel T Pieces

Description	Code	€ Ex VAT	€ Inc VAT
T Piece Chrome	8.901	24.00	**29.52**
T Piece Matt White	41.3030	30.00	**36.90**
T Piece Matt Grey	41.3031	30.00	**36.90**
T Piece Matt Cappuccino	41.3032	30.00	**36.90**
T Piece Matt Anthracite	41.3033	30.00	**36.90**
T Piece Matt Black	41.3034	30.00	**36.90**

Corner Dual Fuel Thermostatic Valve & Lockshield Valve

15mm Corner Dual Fuel TRV & Lockshield Valve Chrome

Description	Colour	Code	€ Ex VAT	€ Inc VAT
Dual Fuel TRV and Lockshield Valve 15mm	Chrome	12.058	104.00	**127.92**
Dual Fuel TRV and Lockshield Valve 15mm	Matt White	54.0026	98.00	**120.54**
Dual Fuel TRV and Lockshield Valve 15mm	Matt Anthracite	54.0027	98.00	**120.54**
Dual Fuel TRV and Lockshield Valve 15mm	Matt Black	54.0028	98.00	**120.54**

FEATURES
- Approved to EN215
- Produced to ISO 9001:2008
- Integrated T Piece
- Only fitted with Type A & A+ Elements
- Element entry inlets from both sides
- Brass construction
- 2 Year Warranty*

*With conditions











Valve Buying Guide

Radiator Valve Buying Guide

Step 1
Choose your towel rail or radiator. Remember to check where your central heating pipework is located.

Step 2
Check which type of connection your chosen radiator has. (Side or bottom connection).

Step 3
Choose from one of the below valve types which compatible with your pipework.

Angled Valves



Manual Options **P734 & 735**
Thermostatic (TRV) Options **P732, 733, 736 & 737**

FEATURES
- Most used valve type.
- Connects radiator at 90° angle.
- Pipework can be from the wall or floor.

COMPATIBLE WITH:
- Connections at the sides & pipework from the floor.
- Connections at the sides & pipework from the wall.
- Connections at the bottom & pipework from the wall.



Corner Valves



Manual Options **P735**
Thermostatic (TRV) Options **P732, 733 & 737**

FEATURES
- Connects radiator at 90° angle.
- On side connections, valve head sits vertically.
- On bottom connections, valve head sits under the radiator.

COMPATIBLE WITH:
- Connections at the sides & pipework from the wall.
- Connections at the bottom & pipework from the wall.

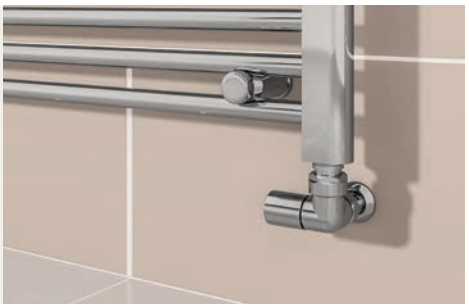

Straight Valves

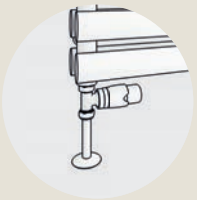

Manual Options **P734**
Thermostatic (TRV) Options **P732, 733 & 736**

FEATURES
- Fits best to bottom connection towel rails & radiators.
- Suitable only with bottom connection radiators & towel rails with pipework from the floor or along the wall.
- Can be connected vertically or horizontally depending on the pipework.

COMPATIBLE WITH:
- Connections at the bottom & pipework from the floor.



Twin Thermostatic Valves

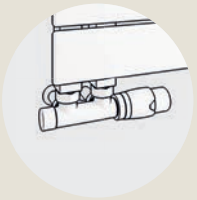

Thermostatic (TRV) Options **P733**

FEATURES
- Angled & Straight versions available.
- 50mm connection centres.
- Saves space by using one valve instead of two.
- Only suitable for selected models in our ranges.

COMPATIBLE WITH:
- Connections at the bottom & pipework from the floor.
- Connections at the bottom & pipework from the wall.

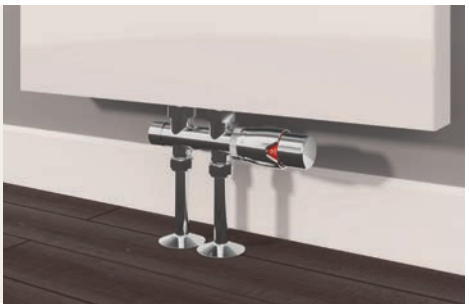

Dual Fuel Thermostatic Valves

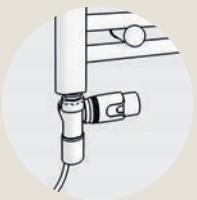

Thermostatic (TRV) Options **P730**

FEATURES
- Only corner version available.
- Elements can be fitted from both sides.
- Only Type A & Type A+ element can be used.

COMPATIBLE WITH:
- Connections at the bottom & pipework from the wall.



Drain Off Valves

P735

- Can be used to drain off radiators.

Pipe Shrouds & Collar Kits

P739

- 15mm pipe covering shrouds & collars for asthetic perfection.

Darlington Valves

DARLINGTON STRAIGHT TRV



BI-DIRECTIONAL — Chrome

Straight TRV with Lockshield 15mm (pair)

Code	€ Ex VAT	€ Inc VAT
54.0003	52.00	**63.96**



BI-DIRECTIONAL — White/Chrome

Straight TRV with Lockshield 15mm (pair)

Code	€ Ex VAT	€ Inc VAT
54.0005	54.00	**66.42**



BI-DIRECTIONAL — Matt White

Straight TRV with Lockshield 15mm (pair)

Code	€ Ex VAT	€ Inc VAT
54.0019	59.00	**72.57**



BI-DIRECTIONAL — Matt Anthracite

Straight TRV with Lockshield 15mm (pair)

Code	€ Ex VAT	€ Inc VAT
54.0020	59.00	**72.57**

DARLINGTON ANGLED TRV



BI-DIRECTIONAL — Chrome

Angled TRV with Lockshield 15mm (pair)

Code	€ Ex VAT	€ Inc VAT
54.0002	51.00	**62.73**



BI-DIRECTIONAL — White/Chrome

Angled TRV with Lockshield 15mm (pair)

Code	€ Ex VAT	€ Inc VAT
54.0006	52.00	**63.96**

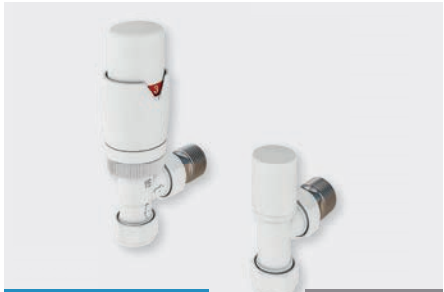

BI-DIRECTIONAL — Matt White

Angled TRV with Lockshield 15mm (pair)

Code	€ Ex VAT	€ Inc VAT
54.0016	58.00	**71.34**



BI-DIRECTIONAL — Matt Anthracite

Angled TRV with Lockshield 15mm (pair)

Code	€ Ex VAT	€ Inc VAT
54.0017	58.00	**71.34**

DARLINGTON CORNER TRV



BI-DIRECTIONAL — Chrome

Corner TRV with Lockshield 15mm (pair)

Code	€ Ex VAT	€ Inc VAT
54.0004	54.00	**66.42**



BI-DIRECTIONAL — White/Chrome

Corner TRV with Lockshield 15mm (pair)

Code	€ Ex VAT	€ Inc VAT
54.0007	58.00	**71.34**



BI-DIRECTIONAL — Matt White

Corner TRV with Lockshield 15mm (pair)

Code	€ Ex VAT	€ Inc VAT
54.0022	69.00	**84.87**



BI-DIRECTIONAL — Matt Anthracite

Corner TRV with Lockshield 15mm (pair)

Code	€ Ex VAT	€ Inc VAT
54.0023	69.00	**84.87**

FEATURES

- Approved to EN 1074-2:2000
- Produced to GB/T 19001-2016
- Produced to ISO 9001:2015
- 2 Year warranty with conditions

TECHNICAL INFORMATION

On all Darlington valves, the materials used can have a slight difference between their parts colours. The numbers on the TRV heads do not represent specific room temperatures as the temperature at which the valve operates depends on the water temperature flowing through the radiator, airflow around the head of the TRV, the room size and any heat loss in that space through walls, windows and floors.

Darlington & Thermostatic Valves

DARLINGTON STRAIGHT TRV



BI-DIRECTIONAL | Matt Black

Straight TRV with Lockshield 15mm (pair)

Code	€ Ex VAT	€ Inc VAT
54.0021	59.00	**72.57**

DARLINGTON ANGLED TRV



BI-DIRECTIONAL | Matt Black

Angled TRV with Lockshield 15mm (pair)

Code	€ Ex VAT	€ Inc VAT
54.0018	58.00	**71.34**

DARLINGTON CORNER TRV



BI-DIRECTIONAL | Matt Black

Corner TRV with Lockshield 15mm (pair)

Code	€ Ex VAT	€ Inc VAT
54.0024	69.00	**84.87**

TRADITIONAL VALVES

Comes with dark wood effect head

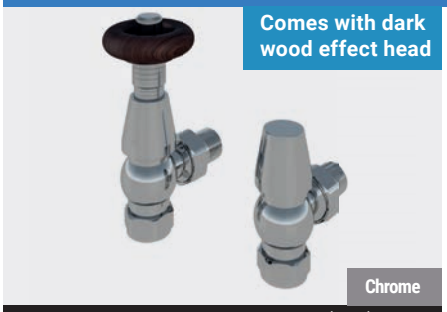

Chrome

Angled TRV with Lockshield 15mm (pair)

Code	€ Ex VAT	€ Inc VAT
54.0008	119.00	**146.37**

Comes with dark wood effect head



Satin Nickel

Angled TRV with Lockshield 15mm (pair)

Code	€ Ex VAT	€ Inc VAT
54.0009	129.00	**158.67**

Comes with dark wood effect head

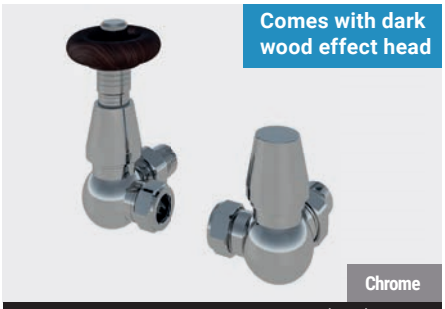

Chrome

Corner TRV with Lockshield 15mm (pair)

Code	€ Ex VAT	€ Inc VAT
54.0010	150.00	**184.50**

Comes with dark wood effect head



Satin Nickel

Corner TRV with Lockshield 15mm (pair)

Code	€ Ex VAT	€ Inc VAT
54.0011	154.00	**189.42**



MANUAL VALVE | Chrome

Angled Traditional Valves with Tails (pair)

Code	€ Ex VAT	€ Inc VAT
54.0001	72.00	**88.56**

FEATURES

- Approved to EN 1074-2:2000
- All valves are 15mm models
- Produced to GB/T 19001-2016 and ISO 9001:2015
- Not bi-directional, TRV head must be fitted to flow side.
- 2 Year warranty*

*With conditions

TWIN THERMOSTATIC VALVES

54.0012



54.0013



54.0014



54.0015



Twin Thermostatic Valves

Description	Colour	Code	€ Ex VAT	€ Inc VAT
Straight Twin inlet Thermostatic Radiator Valve 15mm	Gloss White	54.0012	98.00	**120.54**
Straight Twin inlet Thermostatic Radiator Valve 15mm	Chrome	54.0013	90.00	**110.70**
Angled Twin inlet Thermostatic Radiator Valve 15mm	Gloss White	54.0014	98.00	**120.54**
Angled Twin inlet Thermostatic Radiator Valve 15mm	Chrome	54.0015	90.00	**110.70**

FEATURES

- All twin thermostatic vales are 15 mm
- Tapping Centres: 50mm
- Approved to EN 1074-2:2000
- Produced to GB/T 19001-2016 and ISO 9001:2015
- 2 Year warranty*

*With conditions

Manual Valves

Straight Valves



Square straight radiator valves chrome (pair)

Code	€ Ex VAT	€ Inc VAT
41.3002	97.00	**119.31**



Minimalist radiator valves straight chrome (pair)

Code	€ Ex VAT	€ Inc VAT
41.3005	59.00	**72.57**



Square straight radiator valves chrome (pair)

Code	€ Ex VAT	€ Inc VAT
12.038	129.00	**158.67**



Straight radiator valves matt white (pair)

Code	€ Ex VAT	€ Inc VAT
41.3013	61.00	**75.03**



Straight radiator valves chrome (pair)

Code	€ Ex VAT	€ Inc VAT
41.3008	61.00	**75.03**



Straight radiator valves matt black (pair)

Code	€ Ex VAT	€ Inc VAT
41.3014	61.00	**75.03**

Straight Valves (continued)



Straight radiator valves matt anthracite (pair)

Code	€ Ex VAT	€ Inc VAT
41.3016	59.00	**72.57**



Angled square radiator valves chrome (pair)

Code	€ Ex VAT	€ Inc VAT
12.036	142.00	**174.66**

Angled Valves



Square angled radiator valves chrome (pair)

Code	€ Ex VAT	€ Inc VAT
41.3001	93.00	**114.39**



Minimalist radiator valves angled chrome (pair)

Code	€ Ex VAT	€ Inc VAT
41.3004	58.00	**71.34**



Angled radiator valves chrome (pair)

Code	€ Ex VAT	€ Inc VAT
41.3007	62.00	**76.26**



Angled radiator valves matt white (pair)

Code	€ Ex VAT	€ Inc VAT
41.3011	59.00	**72.57**

Manual Valves

Angled Valves (continued)



Angled radiator valves matt anthracite (pair)

Code	€ Ex VAT	€ Inc VAT
41.3015	61.00	**75.03**



Angled radiator valves matt black (pair)

Code	€ Ex VAT	€ Inc VAT
41.3012	59.00	**72.57**



Angled Crosshead Radiator Valves (pair)

Code	€ Ex VAT	€ Inc VAT
54.0025	61.00	**75.03**

Corner Valves



Square corner rad valves chrome (pair)

Code	€ Ex VAT	€ Inc VAT
41.3010	119.00	**146.37**



Corner radiator valves chrome (pair)

Code	€ Ex VAT	€ Inc VAT
41.3006	66.00	**81.18**



Corner radiator valves matt white (pair)

Code	€ Ex VAT	€ Inc VAT
41.3017	69.00	**84.87**



Corner radiator valves matt anthracite (pair)

Code	€ Ex VAT	€ Inc VAT
41.3018	69.00	**84.87**



Corner radiator valves matt black (pair)

Code	€ Ex VAT	€ Inc VAT
41.3019	69.00	**84.87**

Drain Off Valve

Drain Off Valve

Description	Colour	Code	€ Ex VAT	€ Inc VAT
15mm Lockshield with Drain Valve	Chrome	12.052	20.00	**24.60**

FEATURES
- Can be used to drain off radiators.
- Chrome plated brass body, comes with white cover cap.

12.052



Traditional Valves



Pair of Traditional Rad Valves + Tails Chrome

Code	€ Ex VAT	€ Inc VAT
41.3009	105.00	**129.15**

Thermostatic Valves

Straight Thermostatic Valves

12.043



Biava 15mm TRV & Lockshield - Chrome

Code	€ Ex VAT	€ Inc VAT
12.043	72.00	**88.56**

12.048



Biava 15mm TRV & Lockshield - Chrome/White

Code	€ Ex VAT	€ Inc VAT
12.048	58.00	**71.34**

41.3020



15mm TRV & Lockshield - Matt White

Code	€ Ex VAT	€ Inc VAT
41.3020	66.00	**81.18**

41.3026*



15mm TRV & Lockshield - Matt Grey

Code	€ Ex VAT	€ Inc VAT
41.3026	80.00	**98.40**

41.3028*



15mm TRV & Lockshield - Matt Cappuccino

Code	€ Ex VAT	€ Inc VAT
41.3028	80.00	**98.40**

41.3021



15mm TRV & Lockshield - Matt Anthracite

Code	€ Ex VAT	€ Inc VAT
41.3021	66.00	**81.18**

Straight Thermostatic Valves

41.3022



15mm TRV & Lockshield - Matt Black

Code	€ Ex VAT	€ Inc VAT
41.3022	66.00	**81.18**

41.3035

Available February 2023

New Colour



15mm TRV & Lockshield - Brushed Brass

Code	€ Ex VAT	€ Inc VAT
41.3035	91.00	**111.93**

12.047



Biava 15mm TRV & Lockshield - Chrome/White

Code	€ Ex VAT	€ Inc VAT
12.047	58.00	**71.34**

41.3023



15mm TRV & Lockshield - Matt White

Code	€ Ex VAT	€ Inc VAT
41.3023	62.00	**76.26**

Angled Thermostatic Valves

12.041



Biava 15mm TRV & Lockshield - Chrome

Code	€ Ex VAT	€ Inc VAT
12.041	72.00	**88.56**

41.3027



15mm TRV & Lockshield - Matt Grey

Code	€ Ex VAT	€ Inc VAT
41.3027	75.00	**92.25**

FEATURES (STRAIGHT & ANGLED)

- 15mm straight models
- Approved to EN215
- Produced to ISO 9001: - 2008
- Energy saving - lower fuel bills
- Controls individual radiators to allow varying comfort levels throughout the home
- Reversible tail piece facilitates vertical or horizontal installation
- Luxury gloss white, matt white, matt grey, matt cappuccino, matt black, brushed nickel and and chrome finishes
- 2 Year warranty with conditions

All straight TRV's are BI-DIRECTIONAL

All angled TRV's are BI-DIRECTIONAL

TECHNICAL INFORMATION

On all TRV's, due to different materials used, there can be a slight difference between the parts colours. The numbers on the TRV heads do not represent specific room temperatures as the temperature at which the valve operates depends on the water temperature flowing through the radiator, airflow around the head of the TRV, the room size and any heat loss in that space through walls, windows and floors.

Thermostatic Valves

Angled Thermostatic Valves

41.3029*



15mm TRV & Lockshield - Matt Cappuccino

Code	€ Ex VAT	€ Inc VAT
41.3029	75.00	**92.25**

41.3024



15mm TRV & Lockshield - Matt Anthracite

Code	€ Ex VAT	€ Inc VAT
41.3024	62.00	**76.26**

41.3025



15mm TRV & Lockshield - Matt Black

Code	€ Ex VAT	€ Inc VAT
41.3025	62.00	**76.26**

Angled Thermostatic Valves

41.3036

Available February 2023

New Colour



15mm TRV & Lockshield - Brushed Brass

Code	€ Ex VAT	€ Inc VAT
41.3036	91.00	**111.93**

Corner Thermostatic Valves

12.045



15mm TRV & Lockshield - Chrome

Code	€ Ex VAT	€ Inc VAT
12.045	72.00	**88.56**

12.035



15mm TRV & Lockshield - Nickel/White

Code	€ Ex VAT	€ Inc VAT
12.035	61.00	**75.03**

12.049



15mm TRV & Lockshield - Chrome/White

Code	€ Ex VAT	€ Inc VAT
12.049	58.00	**71.34**

12.053



15mm TRV & Lockshield - Matt White

Code	€ Ex VAT	€ Inc VAT
12.053	101.00	**124.23**

12.054



15mm TRV & Lockshield - Matt Grey

Code	€ Ex VAT	€ Inc VAT
12.054	101.00	**124.23**

12.055



15mm TRV & Lockshield - Matt Cappuccino

Code	€ Ex VAT	€ Inc VAT
12.055	107.00	**131.61**

12.056



15mm TRV & Lockshield - Matt Anthracite

Code	€ Ex VAT	€ Inc VAT
12.056	101.00	**124.23**

12.057



15mm TRV & Lockshield - Matt Black

Code	€ Ex VAT	€ Inc VAT
12.057	101.00	**124.23**

41.3037

Available February 2023

New Colour



15mm TRV & Lockshield - Brushed Brass

Code	€ Ex VAT	€ Inc VAT
41.3037	107.00	**131.61**

FEATURES (CORNER VALVES)

- 15mm corner models
- Approved to EN215
- Produced to ISO 9001: - 2008
- Energy saving - lower fuel bills
- Controls individual radiators to allow varying comfort levels throughout the home
- Reversible tail piece facilitates vertical or horizontal installation
- Luxury gloss white, matt white, matt grey, matt cappuccino, matt black, brushed nickel and and chrome finishes
- 2 Year warranty*

* With conditions

TECHNICAL INFORMATION

**Due to different materials used, there can be a slight difference between the parts colours.

The Corner TRV can only be fitted RH if fitting on bottom connection or LH if fitting on side connection.

Accessories

Multi-Rail Towel Hangers

Must be fitted before installation.

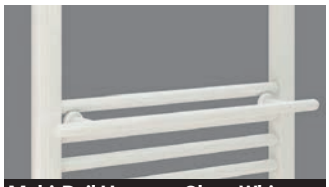

Multi-Rail Hanger - Gloss White

Size	Code	€ Ex VAT	€ Inc VAT
300mm	101.0010	61.00	**75.03**
400mm	101.0012	62.00	**76.26**
450mm	101.0016	69.00	**84.87**
500mm	101.0018	72.00	**88.56**
600mm	101.0022	80.00	**98.40**
750mm	101.0026	84.00	**103.32**

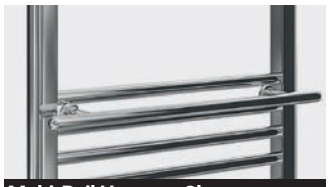

Multi-Rail Hanger - Chrome

Size	Code	€ Ex VAT	€ Inc VAT
300mm	101.0011	83.00	**102.09**
400mm	101.0015	84.00	**103.32**
450mm	101.0017	93.00	**114.39**
500mm	101.0021	104.00	**127.92**
600mm	101.0025	111.00	**136.53**
750mm	101.0027	117.00	**143.91**



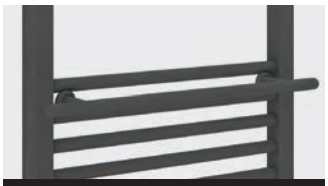

Multi-Rail Hanger - Matt Anthracite

Size	Code	€ Ex VAT	€ Inc VAT
400mm	101.0014	62.00	**76.26**
500mm	101.0020	72.00	**88.56**
600mm	101.0024	80.00	**98.40**

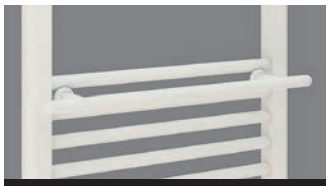

Multi-Rail Hanger - Matt White

Size	Code	€ Ex VAT	€ Inc VAT
400mm	101.0013	62.00	**76.26**
500mm	101.0019	72.00	**88.56**
600mm	101.0023	80.00	**98.40**



Multi-Rail Hanger - Matt Grey

Size	Code	€ Ex VAT	€ Inc VAT
400mm	101.0111	62.00	**76.26**
500mm	101.0112	72.00	**88.56**
600mm	101.0113	80.00	**98.40**



Multi-Rail Hanger - Matt Black

Size	Code	€ Ex VAT	€ Inc VAT
400mm	101.0061	62.00	**76.26**
500mm	101.0062	72.00	**88.56**
600mm	101.0063	80.00	**98.40**

Compatible Radiators

Wendover Straights	**All Models**	Wingrave Straights	**All Models**	Biava Dry Elements	**All Models**	Westwards	**All Models**
Biava Tube on Tube	**All Models**	Biava Multi-Rail	**All Models**	Biava Multirail Hidden Vent	**All Models**		

Rivassa & Imperia - Towel Hangers

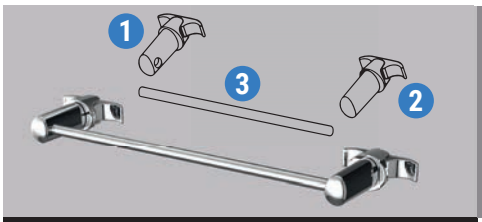

Towel hanger comes in three unassembled pieces. Please cut 600mm bar to required column-to-column length.

Rivassa Towel Hanger

Size	Colour	Code	€ Ex VAT	€ Inc VAT
600mm	Chrome	16.158	161.00	**198.03**
600mm	White	16.157	112.00	**137.76**

Can be fitted after installation!

Rivassa & Imperia - Robe Hooks



Robe Hook- Chrome

Details	Code	€ Ex VAT	€ Inc VAT
Single Hook	16.006	27.00	**33.21**



Robe Hook- White

Details	Code	€ Ex VAT	€ Inc VAT
Single Hook	16.005	23.00	**28.29**

Can be fitted after installation!

Towel Rail - Towel Hangers



Towel Hanger - Chrome

Size	Code	€ Ex VAT	€ Inc VAT
210mm	16.002	89.00	**109.47**
310mm	16.004	90.00	**110.70**
360mm	16.352	93.00	**114.39**
470mm	16.350	96.00	**118.08**
600mm	16.351	98.00	**120.54**



Towel Hanger - White

Size	Code	€ Ex VAT	€ Inc VAT
210mm	16.001	66.00	**81.18**
310mm	16.003	70.00	**86.10**
360mm	16.152	75.00	**92.25**
470mm	16.150	80.00	**98.40**
600mm	16.151	83.00	**102.09**

Can be fitted after installation!

Towel Rail - Robe Hooks



Robe Hook- Chrome

Details	Code	€ Ex VAT	€ Inc VAT
Hook Pair	16.500	59.00	**72.57**



Robe Hook- White

Details	Code	€ Ex VAT	€ Inc VAT
Hook Pair	16.600	49.00	**60.27**

Can be fitted after installation!

Accessories

Pipe Shrouds and Collar Kits









Pipe Shrouds and Collar Kits			
Description	Code	€ Ex VAT	€ Inc VAT
15mm Pipe Shroud & Collar Kit White	92.0001	19.00	**23.37**
15mm Pipe Shroud & Collar Kit Chrome	92.0002	28.00	**34.44**
15mm Pipe Shroud & Collar Kit Anthracite	92.0003	20.00	**24.60**
15mm Pipe Shroud & Collar Kit Black	92.0004	20.00	**24.60**

FEATURES
- Manufactured from high grade polypropylene
- Suitable for 15mm pipes
- Available in white, anthracite, black and chrome
- Each kit includes two pipe shrouds and two collars
- Shroud length 200mm
- Easy push-fit installation





Towel Rail Toilet Paper Holder



Toilet Paper Holder - White

Code	€ Ex VAT	€ Inc VAT
16.155	126.00	**154.98**

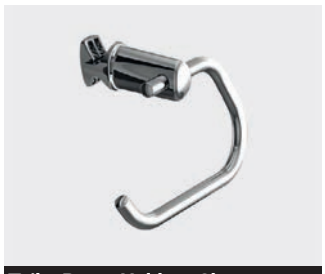

Toilet Paper Holder - Chrome

Code	€ Ex VAT	€ Inc VAT
16.156	138.00	**169.74**



Compatible Radiators			
Wendover	**All Models**	Wingrave	**All Models**
Biava Tube on Tube	**All Models**	Biava Multi-Rail	**All Models**
Biava Dry Elements	**All Models**	Westward	**All Models**

Towel Rail Room Divider Bracket Sets

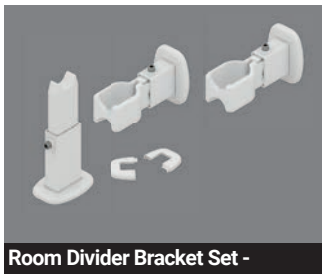

Room Divider Bracket Set - White

Code	€ Ex VAT	€ Inc VAT
16.153	213.00	**261.99**



Room Divider Bracket Set - Chrome

Code	€ Ex VAT	€ Inc VAT
16.154	300.00	**369.00**





Compatible Radiators			
Wendover Straight	**All Colours**	Wingrave Straight	**All Colours**
Westward	**All Colours**	Biava Multi-Rail Straight	**All Colours**
Biava Dry Element	**All Colours**	**Corinium Round**	**All Colours**

Accessories

Multi-Purpose Towel Hangers



Towel Hanger - Matt White - Left / Right

Size	Code	€ Ex VAT	€ Inc VAT
300mm	89.0882L/89.0882R	170.00	**209.10**
400mm	89.0883L/89.0883R	174.00	**214.02**
500mm	89.0884L/89.0884R	178.00	**218.94**



Towel Hanger - Matt Grey - Left / Right

Size	Code	€ Ex VAT	€ Inc VAT
300mm	89.0885L/89.0885R	170.00	**209.10**
400mm	89.0886L/89.0886R	174.00	**214.02**
500mm	89.0887L/89.0887R	178.00	**218.94**



Towel Hanger - Matt Cappuccino - Left / Right

Size	Code	€ Ex VAT	€ Inc VAT
300mm	89.0888L/89.0888R	170.00	**209.10**
400mm	89.0889L/89.0889R	174.00	**214.02**
500mm	89.0890L/89.0890R	178.00	**218.94**



Towel Hanger - Matt Anthracite - Left / Right

Size	Code	€ Ex VAT	€ Inc VAT
300mm	89.0891L/89.0891R	170.00	**209.10**
400mm	89.0892L/89.0892R	174.00	**214.02**
500mm	89.0893L/89.0893R	178.00	**218.94**



Towel Hanger - Matt Black - Left / Right

Size	Code	€ Ex VAT	€ Inc VAT
300mm	89.0894L/89.0894R	170.00	**209.10**
400mm	89.0895L/89.0895R	174.00	**214.02**
500mm	89.0896L/89.0896R	178.00	**218.94**

TECHNICAL INFORMATION

Please check the technical drawing to see all the required measurements. Multi-Purpose Towel Hangers can only be fitted on the wall. Only vertical radiators have been used in the compatibility chart.

Left Hand Towel Hangers : When fitted on the wall and looking from front, shelf is on the left and towel can be hung from the right.

Right Hand Towel Hangers : When fitted on the wall and looking from front, shelf is on the right and towel can be hung from the left.

Can be fitted after installation!

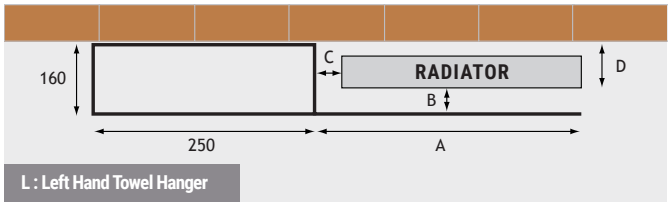

L : Left Hand Towel Hanger

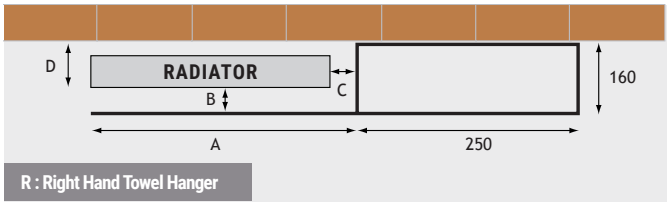

R : Right Hand Towel Hanger

MULTI-PURPOSE TOWEL HANGER COMPATIBILITY CHART

Radiator Model	Radiator Width (mm)				Towel Hanger length A (mm)				Shelf Width (mm)	Shelf Depth (mm)	Towel hanger to wall distance (mm)	Radiator's Front to Wall Distance D (mm)	Towel Hanging Distance B (mm)	Distance from Radiator to Towel Shelf C (mm)			
	1.)	2.)	3.)	4.)	1.)	2.)	3.)	4.)						1.)	2.)	3.)	4.)
RUBANO	383				500				250	160	160	114	46	117			
ROWSHAM	300	380			400	500			250	160	160	110	50	100	120		
TUNSTALL	280	420			400	500			250	160	160	93	67	120	80		
TUNSTALL DOUBLE	280	420			400	500			250	160	160	104	56	120	80		
ADDINGTON TYPE10	292	366	440		400	400	500		250	160	160	70	90	108	34	60	
DEDDINGTON	310	470			400	500			250	160	160	100	60	90	30		
ADDINGTON TYPE20	366	440			400	500			250	160	160	93	67	34	60		
ADDINGTON ALUMINIUM TYPE10	292	366	440		400	400	500		250	160	160	76.5	83.5	108	34	60	
ADDINGTON ALUMINIUM TYPE20	366	440			400	500			250	160	160	96.5	63.5	34	60		
ROSANO	280	375	470		300	400	500		250	160	160	70/90	90/70	20	25	30	
PERETTI	280	375	470		300	400	500		250	160	160	70/90	90/70	20	25	30	
SANDHURST	275	415	485		300	500	500		250	160	160	105	55	25	85	15	
TORDINO	280	375	470		300	400	500		250	160	160	80/100	80/60	20	25	30	
GUARDIA / Flat Side	280	375	470		300	400	500		250	160	160	100	60	20	25	30	
GUARDIA / Curved Side	280	375	470		300	400	500		250	160	160	110	50	20	25	30	
HADLEIGH	275	415	485		300	500	500		250	160	160	98	62	25	85	15	
VESIMA	303	403			400	500			250	160	160	85/105	75/55	97	97		
PRESTON	185				300				250	160	160	71/91	89/69	115			
BERLINI	185				300				250	160	160	70/90	90/70	115			
CHARLTON	280	375	470		300	400	500		250	160	160	71/91	89/69	20	25	30	
WITHINGTON	280	375	470		300	400	500		250	160	160	71/91	89/69	20	25	30	
MALMESBURY	185	280	375	470	300	300	400	500	250	160	160	79/99	81/61	115	20	25	30
FAIRFORD	375				400				250	160	160	81/101	79/59	25			
BURFORD	275	345	415	485	300	400	500	500	250	160	160	108/128	52/32	25	55	85	15
KELMSCOTT	275	345	415	485	300	400	500	500	250	160	160	83/103	77/57	25	55	85	15

Accessories

Round Vent Caps



Round Vent Caps - White

Description	Code	€ Ex VAT	€ Inc VAT
Round Vent Cap (pair)	101.0001	23.00	**28.29**



Round Vent Caps - Grey

Description	Code	€ Ex VAT	€ Inc VAT
Round Vent Cap (pair)	101.0002	23.00	**28.29**



Round Vent Caps - Cappuccino

Description	Code	€ Ex VAT	€ Inc VAT
Round Vent Cap (pair)	101.0003	23.00	**28.29**



Round Vent Caps - Anthracite

Description	Code	€ Ex VAT	€ Inc VAT
Round Vent Cap (pair)	101.0004	23.00	**28.29**



Round Vent Caps - Black

Description	Code	€ Ex VAT	€ Inc VAT
Round Vent Cap (pair)	101.0005	23.00	**28.29**

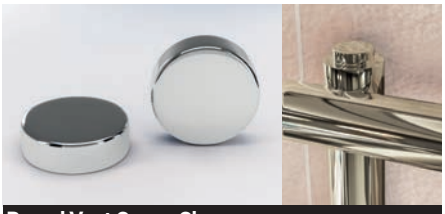

Round Vent Caps - Chrome

Description	Code	€ Ex VAT	€ Inc VAT
Round Vent Cap (pair)	101.0006	23.00	**28.29**

Compatible Radiators

Wingrave	Biava Square	Marlow E-Style	Deddington Towel Rail	Fairford
Wendover	Leonardo	Rubano	Addington Type21	Burford
Tuscan	Hurley	Rowsham	Addington Type22	Kelmscott
Biava Multirail	Helmsley	Tunstall	Addington Type20 Towel Rail	Witney
Biava Multirail HV	Staverton Tube on Tube Straight	Tunstall Double	Addington Type21 Towel Rail	Rivassa 2 Column
Westward	Staverton	Tunstall Mirror	Berkeley	Rivassa 3 Column
Biava Round	Staverton Tube on Tube Curved	Addington Type10	Preston	Rivassa 4 Column
Biava Tube on Tube	Mezzo Tondo	Addington Type20	Charlton	Imperia 2 Column
Launton	Pesaro	Deddington	Withington	Imperia 3 Column
Haddenham	Marlow	Addington Type10 Towel Rail	Malmesbury	Corinium Round
Tuscan Round	Tuscan Square	Tordino	Platani	Reinbach
Murano	Lambourne	Tuscan Square Multirail	Corinium Round	Tuscan Round

D-Shape Vent Caps



D-Shape Vent Caps - White

Description	Code	€ Ex VAT	€ Inc VAT
D-Shape Vent Cap (pair)	101.0007	26.00	**31.98**



D-Shape Vent Caps - Anthracite

Description	Code	€ Ex VAT	€ Inc VAT
D-Shape Vent Cap (pair)	101.0008	26.00	**31.98**

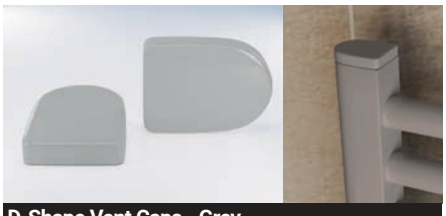

D-Shape Vent Caps - Grey

Description	Code	€ Ex VAT	€ Inc VAT
D-Shape Vent Cap (pair)	101.0114	26.00	**31.98**

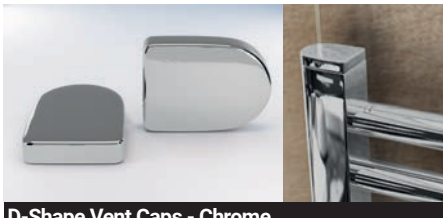

D-Shape Vent Caps - Chrome

Description	Code	€ Ex VAT	€ Inc VAT
D-Shape Vent Cap (pair)	101.0009	26.00	**31.98**



D-Shape Vent Caps - Black

Description	Code	€ Ex VAT	€ Inc VAT
D-Shape Vent Cap (pair)	101.0060	26.00	**31.98**



With Vent Caps 101.0009

Compatible Radiators

Wingrave	Westwood	Defford	Santero	Rion Multirail

Technical Tables & Drawings

WINGRAVE - THE MULTIRAIL RANGE

Wingrave - Straight

Height H (mm)	Width W (mm)	Tappings C (mm)	Distance from wall - D (mm)	Tappings from wall - A (mm)	Tube Qty	Water Content L	Weight KG	Colour	▲T60 Watts	▲T60 BTU	Element Output	Element Type	Colour	▲T60 Watts	▲T60 BTU	Element Output	Element Type
600	300	256	79	64	10	2.10	2.90	Coloured	204	697	100W	A,A+,D,E,F,G	Chrome	131	447	100W	A,A+,D,E,F,G
600	400	356	79	64	10	2.40	3.32	Coloured	257	877	150W	A,A+,D,E,F,G	Chrome	167	570	100W	A,A+,D,E,F,G
600	500	456	79	64	10	2.70	3.87	Coloured	309	1055	150W	A,A+,D,E,F,G	Chrome	200	683	100W	A,A+,D,E,F,G
600	600	556	79	64	10	3.10	3.91	Coloured	358	1222	150W	A,A+,D,E,F,G	Chrome	233	795	150W	A,A+,D,E,F,G
600	1000	955	79	64	10	4.40	5.20	Coloured	543	1853	300W	A,A+,D,F,G	Chrome	355	1212	150W	A,A+,D,F,G
600	1200	955	79	64	10	5.00	7.30	Coloured	629	2147	300W	A,A+,D,F,G	Chrome	413	1410	150W	A,A+,D,F,G
800	300	256	79	64	14	2.80	3.55	Coloured	266	908	150W	A,A+,D,E,F,G	Chrome	171	584	100W	A,A+,D,E,F,G
800	400	356	79	64	14	2.94	4.90	Coloured	337	1150	150W	A,A+,D,E,F,G	Chrome	217	741	150W	A,A+,D,E,F,G
800	500	456	79	64	14	3.39	5.70	Coloured	404	1379	150W	A,A+,D,E,F,G	Chrome	261	891	150W	A,A+,D,E,F,G
800	600	556	79	64	14	3.85	6.50	Coloured	468	1597	300W	A,A+,D,E,F,G	Chrome	303	1034	150W	A,A+,D,E,F,G
1000	300	256	79	64	16	3.40	4.20	Coloured	331	1130	150W	A,A+,D,E,F,G	Chrome	212	724	150W	A,A+,D,E,F,G
1000	400	356	79	64	16	3.51	5.90	Coloured	419	1430	150W	A,A+,D,E,F,G	Chrome	269	918	150W	A,A+,D,E,F,G
1000	500	456	79	64	16	4.04	6.80	Coloured	502	1713	300W	A,A+,D,E,F,G	Chrome	324	1106	150W	A,A+,D,E,F,G
1000	600	556	79	64	16	4.56	7.70	Coloured	582	1986	300W	A,A+,D,E,F,G	Chrome	376	1283	150W	A,A+,D,E,F,G
1200	300	256	79	64	20	4.20	5.10	Coloured	398	1358	150W	A,A+,D,E,F,G	Chrome	256	874	150W	A,A+,D,E,F,G
1200	400	356	79	64	20	4.30	7.20	Coloured	503	1717	300W	A,A+,D,E,F,G	Chrome	324	1106	150W	A,A+,D,E,F,G
1200	500	456	79	64	20	4.95	8.30	Coloured	604	2061	300W	A,A+,D,E,F,G	Chrome	390	1331	300W	A,A+,D,E,F,G
1200	600	556	79	64	20	5.61	9.40	Coloured	700	2389	300W	A,A+,D,E,F,G	Chrome	454	1550	300W	A,A+,D,E,F,G
1400	300	256	79	64	22	4.70	5.60	Coloured	468	1597	150W	A,A+,D,E,F,G	Chrome	302	1031	150W	A,A+,D,E,F,G
1400	400	356	79	64	22	4.88	8.40	Coloured	592	2020	300W	A,A+,D,E,F,G	Chrome	383	1307	150W	A,A+,D,E,F,G
1400	500	456	79	64	22	5.60	9.40	Coloured	710	2423	300W	A,A+,D,E,F,G	Chrome	461	1573	300W	A,A+,D,E,F,G
1400	600	556	79	64	22	6.30	10.40	Coloured	824	2812	300W	A,A+,D,E,F,G	Chrome	536	1829	300W	A,A+,D,E,F,G
1600	300	256	79	64	26	5.50	6.30	Coloured	542	1850	300W	A,A+,D,E,F,G	Chrome	352	1202	150W	A,A+,D,E,F,G
1600	400	356	79	64	26	5.66	9.50	Coloured	685	2338	300W	A,A+,D,E,F,G	Chrome	446	1522	300W	A,A+,D,E,F,G
1600	500	456	79	64	26	6.51	10.80	Coloured	821	2802	300W	A,A+,D,E,F,G	Chrome	537	1833	300W	A,A+,D,E,F,G
1600	600	556	79	64	26	7.36	12.20	Coloured	953	3252	600W	A,A+,D,E,F,G	Chrome	624	2130	300W	A,A+,D,E,F,G
1800	300	256	79	64	30	6.30	7.30	Coloured	619	2113	300W	A,A+,D,E,F,G	Chrome	405	1382	150W	A,A+,D,E,F,G
1800	400	356	79	64	30	6.45	10.80	Coloured	782	2669	300W	A,A+,D,E,F,G	Chrome	514	1754	300W	A,A+,D,E,F,G
1800	500	456	79	64	30	7.43	12.20	Coloured	938	3201	600W	A,A+,D,E,F,G	Chrome	618	2109	300W	A,A+,D,E,F,G
1800	600	556	79	64	30	8.41	13.80	Coloured	1088	3713	600W	A,A+,D,E,F,G	Chrome	719	2454	300W	A,A+,D,E,F,G

Wingrave - Curved

Height H (mm)	Width W (mm)	Tappings C (mm)	Distance from wall - D (mm)	Tappings from wall - A (mm)	Tube Qty	Water Content L	Weight KG	Colour	▲T60 Watts	▲T60 BTU	Element Output	Element Type	Colour	▲T60 Watts	▲T60 BTU	Element Output	Element Type
800	400	356	92	65	14	3.00	4.9	Coloured	337	337	150W	A,A+,D,E,F,G	Chrome	217	741	150W	A,A+,D,E,F,G
800	500	456	92	65	14	3.58	5.9	Coloured	404	404	150W	A,A+,D,E,F,G	Chrome	261	891	150W	A,A+,D,E,F,G
800	600	556	92	65	14	4.39	7.2	Coloured	468	468	300W	A,A+,D,E,F,G	Chrome	303	1034	150W	A,A+,D,E,F,G
1000	400	356	92	65	16	5.77	9.5	Coloured	419	1430	150W	A,A+,D,E,F,G	Chrome	269	918	150W	A,A+,D,E,F,G
1000	500	456	92	65	16	6.58	10.8	Coloured	502	1713	300W	A,A+,D,E,F,G	Chrome	324	1106	150W	A,A+,D,E,F,G
1000	600	556	92	65	16	3.46	5.7	Coloured	582	1986	300W	A,A+,D,E,F,G	Chrome	376	1283	150W	A,A+,D,E,F,G
1200	400	356	92	65	20	4.12	6.8	Coloured	503	1717	300W	A,A+,D,E,F,G	Chrome	324	1106	150W	A,A+,D,E,F,G
1200	500	456	92	65	20	5.05	8.3	Coloured	604	2061	300W	A,A+,D,E,F,G	Chrome	390	1331	150W	A,A+,D,E,F,G
1200	600	556	92	65	20	6.64	10.8	Coloured	700	2389	300W	A,A+,D,E,F,G	Chrome	454	1550	300W	A,A+,D,E,F,G
1600	400	356	92	65	26	7.58	12.2	Coloured	685	2338	300W	A,A+,D,E,F,G	Chrome	446	1522	150W	A,A+,D,E,F,G
1600	500	456	92	65	26	3.93	6.5	Coloured	821	2802	450W	A,A+,D,E,F,G	Chrome	537	1833	300W	A,A+,D,E,F,G
1600	600	556	92	65	26	4.65	7.7	Coloured	953	3252	450W	A,A+,D,E,F,G	Chrome	624	2130	300W	A,A+,D,E,F,G
1800	400	356	92	65	30	5.72	9.4	Coloured	782	2669	300W	A,A+,D,E,F,G	Chrome	514	1754	300W	A,A+,D,E,F,G
1800	500	456	92	65	30	7.51	12.2	Coloured	938	3201	450W	A,A+,D,E,F,G	Chrome	618	2109	300W	A,A+,D,E,F,G
1800	600	556	92	65	30	8.58	13.8	Coloured	1088	3713	450W	A,A+,D,E,F,G	Chrome	719	2454	450W	A,A+,D,E,F,G

Technical Tables & Drawings

WINGRAVE - STRAIGHT

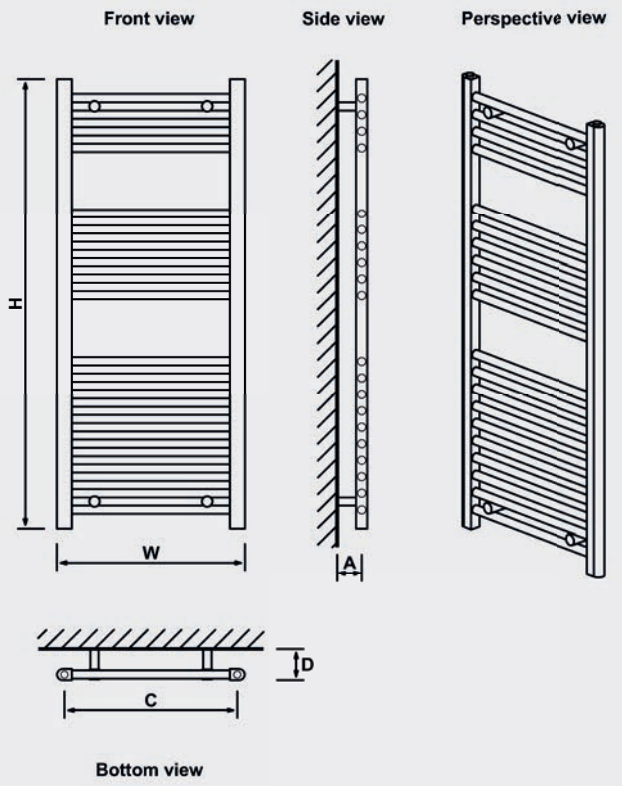

WINGRAVE - CURVED

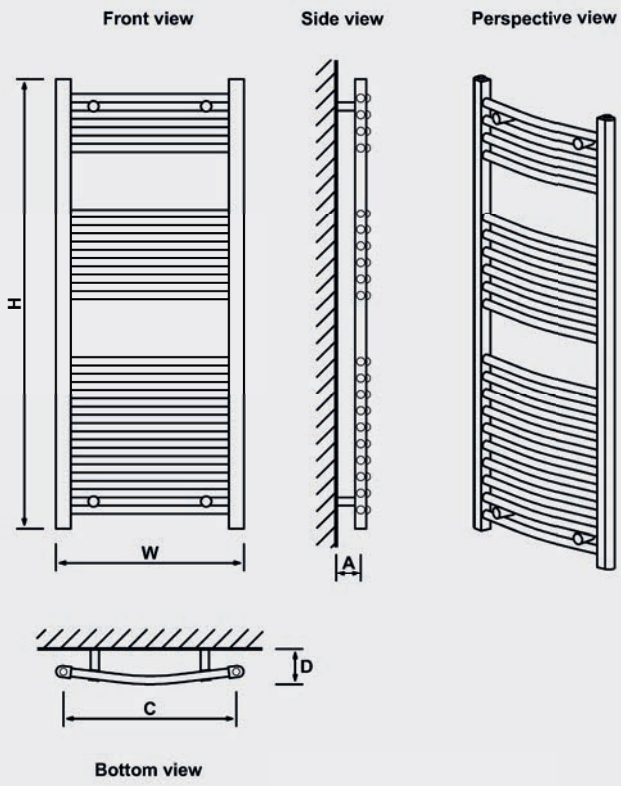



Wingrave
Straight



Wingrave
Curved

Technical Tables & Drawings

WENDOVER - THE MULTIRAIL RANGE

Wendover - Straight

Height H (mm)	Width W (mm)	Tappings C (mm)	Tappings from wall - A (mm)	Distance from wall - D (mm)	Tube Qty	Water Content L	Weight KG	Colour	▲T60 Watts	▲T60 BTU	Element Output	Element Type	Colour	▲T60 Watts	▲T60 BTU	Element Output	Element Type
360	400	350	-	90-105	7	-	-	Coloured	112	423	N/A	N/A	Chrome	112	347	N/A	N/A
600	300	250	75-90	90-105	10	1.81	3.08	Coloured	196	669	100W	A,A+,D,E,F,G	Chrome	155	529	100W	A,A+,D,E,F,G
600	400	350	75-90	90-105	10	2.13	3.55	Coloured	241	822	150W	A,A+,D,E,F,G	Chrome	190	648	100W	A,A+,D,E,F,G
600	500	450	75-90	90-105	10	2.45	4.01	Coloured	285	972	150W	A,A+,D,E,F,G	Chrome	225	768	100W	A,A+,D,E,F,G
600	600	550	75-90	90-105	10	2.77	4.48	Coloured	330	1126	150W	A,A+,D,E,F,G	Chrome	260	887	150W	A,A+,D,E,F,G
600	750	700	75-90	90-105	10	3.25	5.18	Coloured	397	1355	150W	A,A+,D,E,F,G	Chrome	313	1068	150W	A,A+,D,E,F,G
600	1000	950	75-90	90-105	10	4.05	6.35	Coloured	510	1740	300W	A,A+,D,E,F,G	Chrome	401	1368	150W	A,A+,D,E,F,G
600	1200	1150	75-90	90-105	10	4.69	7.28	Coloured	600	2047	300W	A,A+,D,E,F,G	Chrome	472	1610	150W	A,A+,D,E,F,G
800	300	250	75-90	90-105	14	2.46	4.04	Coloured	267	911	150W	A,A+,D,E,F,G	Chrome	211	720	100W	A,A+,D,E,F,G
800	400	350	75-90	90-105	14	2.91	4.69	Coloured	330	1126	150W	A,A+,D,E,F,G	Chrome	260	887	150W	A,A+,D,E,F,G
800	500	450	75-90	90-105	14	3.36	5.34	Coloured	394	1344	150W	A,A+,D,E,F,G	Chrome / Brushed Brass	309	1054	150W	A,A+,D,E,F,G
800	600	550	75-90	90-105	14	3.80	6.00	Coloured	457	1559	150W	A,A+,D,E,F,G	Chrome / Brushed Brass	359	1225	150W	A,A+,D,E,F,G
800	750	700	75-90	90-105	14	4.48	6.98	Coloured	551	1880	300W	A,A+,D,E,F,G	Chrome	433	1477	150W	A,A+,D,E,F,G
1000	300	250	75-90	90-105	16	2.97	4.78	Coloured	320	1092	150W	A,A+,D,E,F,G	Chrome	251	856	150W	A,A+,D,E,F,G
1000	400	350	75-90	90-105	16	3.48	5.53	Coloured	392	1338	150W	A,A+,D,E,F,G	Chrome	308	1051	150W	A,A+,D,E,F,G
1000	500	450	75-90	90-105	16	3.99	6.27	Coloured	464	1583	150W	A,A+,D,E,F,G	Chrome	364	1242	150W	A,A+,D,E,F,G
1000	600	550	75-90	90-105	16	4.51	7.02	Coloured	535	1825	300W	A,A+,D,E,F,G	Chrome	421	1436	150W	A,A+,D,E,F,G
1000	750	700	75-90	90-105	16	5.28	8.14	Coloured	643	2194	300W	A,A+,D,E,F,G	Chrome	506	1726	300W	A,A+,D,E,F,G
1200	300	250	75-90	90-105	20	3.62	5.73	Coloured	392	1338	150W	A,A+,D,E,F,G	Chrome	308	1051	150W	A,A+,D,E,F,G
1200	400	350	75-90	90-105	20	4.26	6.67	Coloured	482	1645	300W	A,A+,D,E,F,G	Chrome	379	1293	150W	A,A+,D,E,F,G
1200	500	450	75-90	90-105	20	4.90	7.60	Coloured	571	1948	300W	A,A+,D,E,F,G	Chrome / Brushed Brass	450	1535	150W	A,A+,D,E,F,G
1200	600	550	75-90	90-105	20	5.54	8.54	Coloured	661	2255	300W	A,A+,D,E,F,G	Chrome / Brushed Brass	554	1890	300W	A,A+,D,E,F,G
1200	750	700	75-90	90-105	20	6.50	9.94	Coloured	796	2716	450W	A,A+,D,E,F,G	Chrome	626	2136	300W	A,A+,D,E,F,G
1400	500	450	75-90	90-105	22	5.50	9.10	-	-	-	-	-	Brushed Brass	504	1720	150W	A,A+,D,E,F,G
1400	600	550	75-90	90-105	22	6.20	10.10	-	-	-	-	-	Brushed Brass	582	1986	300W	A,A+,D,E,F,G
1600	300	250	75-90	90-105	26	4.78	7.43	Coloured	516	1761	300W	A,A+,D,E,F,G	Chrome	406	1385	150W	A,A+,D,E,F,G
1600	400	350	75-90	90-105	26	5.61	8.65	Coloured	632	2156	300W	A,A+,D,E,F,G	Chrome	497	1696	300W	A,A+,D,E,F,G
1600	500	450	75-90	90-105	26	6.44	9.86	Coloured	749	2556	450W	A,A+,D,E,F,G	Chrome / Brushed Brass	589	2010	300W	A,A+,D,E,F,G
1600	600	550	75-90	90-105	26	7.28	11.08	Coloured	867	2958	450W	A,A+,D,E,F,G	Chrome / Brushed Brass	681	2324	300W	A,A+,D,E,F,G
1600	750	700	75-90	90-105	26	8.53	12.90	Coloured	1041	3552	600W	A,A+,D,E,F,G	Chrome	819	2794	450W	A,A+,D,E,F,G
1800	300	250	75-90	90-105	30	5.43	8.39	Coloured	588	2006	300W	A,A+,D,E,F,G	Chrome	462	1576	150W	A,A+,D,E,F,G
1800	400	360	75-90	90-105	30	6.39	9.79	Coloured	723	2467	300W	A,A+,D,E,F,G	Chrome	568	1938	300W	A,A+,D,E,F,G
1800	500	450	75-90	90-105	30	7.35	11.19	Coloured	856	2921	450W	A,A+,D,E,F,G	Chrome / Brushed Brass	675	2303	300W	A,A+,D,E,F,G
1800	600	550	75-90	90-105	30	8.31	12.59	Coloured	991	3381	600W	A,A+,D,E,F,G	Chrome / Brushed Brass	780	2661	450W	A,A+,D,E,F,G
1800	750	700	75-90	90-105	30	9.75	14.69	Coloured	1193	4071	600W	A,A+,D,E,F,G	Chrome	940	3207	450W	A,A+,D,E,F,G



Wendover Straight



Wendover Curved

Technical Tables & Drawings

WENDOVER - STRAIGHT

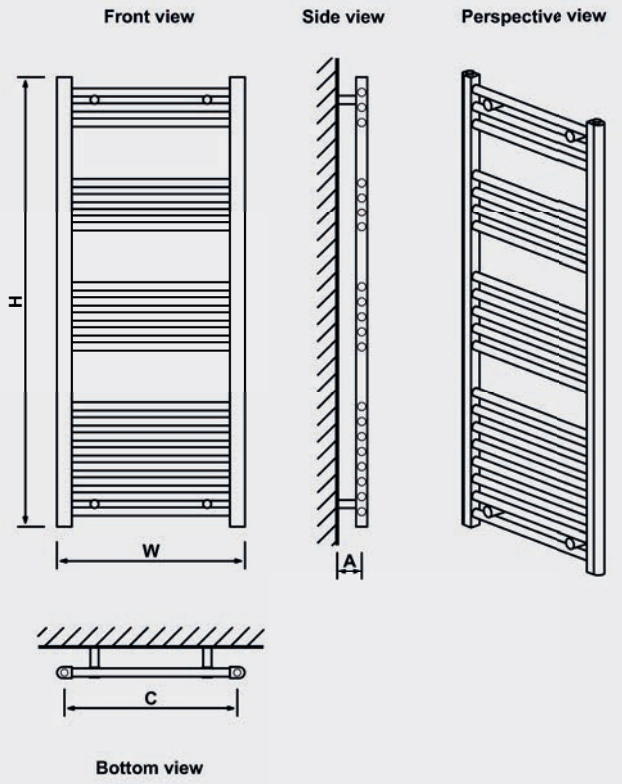

WENDOVER - CURVED

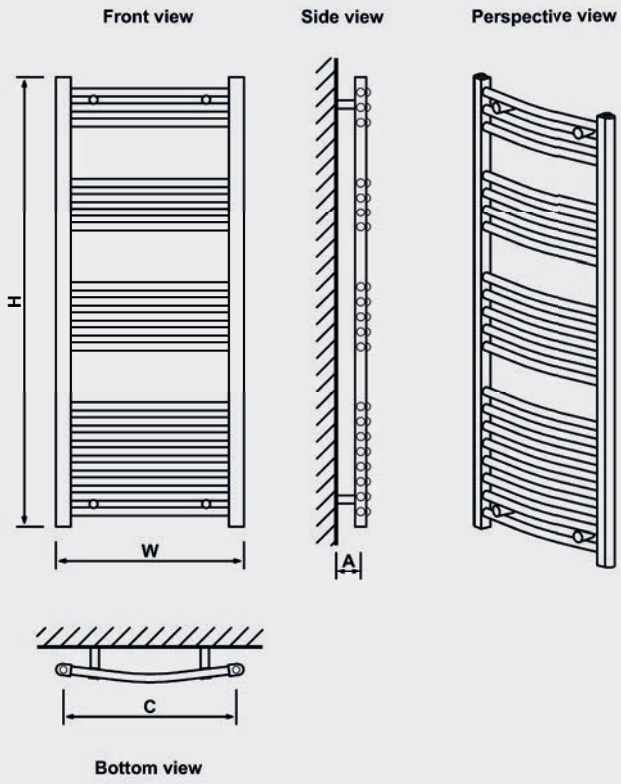

Wendover - Curved

Height H (mm)	Width W (mm)	Tappings C (mm)	Tappings from wall - A (mm)	Distance from wall - D (mm)	Tube Qty	Water Content L	Weight KG	Colour	▲T60 Watts	▲T60 BTU	Element Output	Element Type	Colour	▲T60 Watts	▲T60 BTU	Element Output	Element Type
600	400	350	60-75	87-102	10	2.13	3.55	Coloured	241	822	150W	A,A+,D,E,F,G	Chrome	190	648	100W	A,A+,D,E,F,G
600	500	450	55-70	94-109	10	2.45	4.01	Coloured	285	972	150W	A,A+,D,E,F,G	Chrome	225	768	100W	A,A+,D,E,F,G
600	600	550	50-65	98-113	10	2.77	4.48	Coloured	330	1126	150W	A,A+,D,E,F,G	Chrome	260	887	150W	A,A+,D,E,F,G
600	750	700	70-90	194-214	10	3.35	5.31	Coloured	397	1355	150W	A,A+,D,E,F,G	Chrome	313	1068	150W	A,A+,D,E,F,G
800	400	350	60-75	87-102	14	2.93	4.72	Coloured	333	1136	150W	A,A+,D,E,F,G	Chrome	263	897	150W	A,A+,D,E,F,G
800	500	450	55-70	94-109	14	3.37	5.37	Coloured	396	1351	150W	A,A+,D,E,F,G	Chrome	312	1065	150W	A,A+,D,E,F,G
800	600	550	50-65	98-113	14	3.82	6.02	Coloured	459	1566	150W	A,A+,D,E,F,G	Chrome	361	1232	150W	A,A+,D,E,F,G
800	750	700	70-90	194-214	14	4.62	7.16	Coloured	551	1880	300W	A,A+,D,E,F,G	Chrome	433	1477	150W	A,A+,D,E,F,G
1000	400	350	60-75	87-102	16	3.50	5.56	Coloured	395	1348	150W	A,A+,D,E,F,G	Chrome	310	1058	150W	A,A+,D,E,F,G
1000	500	450	55-70	94-109	16	4.01	6.30	Coloured	467	1593	150W	A,A+,D,E,F,G	Chrome	367	1252	150W	A,A+,D,E,F,G
1000	600	550	50-65	98-113	16	4.53	7.05	Coloured	539	1839	300W	A,A+,D,E,F,G	Chrome	423	1443	150W	A,A+,D,E,F,G
1000	750	700	70-90	194-214	16	5.44	8.35	Coloured	643	2194	300W	A,A+,D,E,F,G	Chrome	506	1726	300W	A,A+,D,E,F,G
1200	400	350	60-75	87-102	20	4.28	6.71	Coloured	486	1658	300W	A,A+,D,E,F,G	Chrome	382	1303	150W	A,A+,D,E,F,G
1200	500	450	55-70	94-109	20	4.93	7.64	Coloured	575	1962	300W	A,A+,D,E,F,G	Chrome	452	1542	150W	A,A+,D,E,F,G
1200	600	550	50-65	98-113	20	5.57	8.57	Coloured	665	2269	300W	A,A+,D,E,F,G	Chrome	523	1784	300W	A,A+,D,E,F,G
1200	750	700	70-90	194-214	20	6.71	10.20	Coloured	796	2716	450W	A,A+,D,E,F,G	Chrome	626	2136	300W	A,A+,D,E,F,G
1600	400	350	60-75	87-102	26	5.64	8.70	Coloured	637	2173	300W	A,A+,D,E,F,G	Chrome	501	1709	300W	A,A+,D,E,F,G
1600	500	450	55-70	94-109	26	6.48	9.91	Coloured	754	2573	450W	A,A+,D,E,F,G	Chrome	593	2023	300W	A,A+,D,E,F,G
1600	600	550	50-65	98-113	26	7.31	11.12	Coloured	870	2968	450W	A,A+,D,E,F,G	Chrome	685	2337	300W	A,A+,D,E,F,G
1600	750	700	70-90	194-214	26	8.79	13.24	Coloured	1041	3552	600W	A,A+,D,E,F,G	Chrome	819	2794	450W	A,A+,D,E,F,G
1800	400	350	60-75	87-102	30	6.43	9.85	Coloured	728	2484	300W	A,A+,D,E,F,G	Chrome	573	1955	300W	A,A+,D,E,F,G
1800	500	450	55-70	94-109	30	7.39	11.25	Coloured	863	2945	450W	A,A+,D,E,F,G	Chrome	678	2313	300W	A,A+,D,E,F,G
1800	600	550	50-65	98-113	30	8.35	12.65	Coloured	998	3405	600W	A,A+,D,E,F,G	Chrome	784	2675	450W	A,A+,D,E,F,G
1800	750	700	70-90	194-214	30	10.06	15.09	Coloured	1193	4071	600W	A,A+,D,E,F,G	Chrome	940	3207	450W	A,A+,D,E,F,G

Technical Tables & Drawings

TUSCAN - THE MULTIRAIL RANGE

Tuscan

Height H (mm)	Width W (mm)	Tappings C (mm)	Tappings from wall - A (mm)	Distance from wall - D (mm)	Tube Qty	Water Content L	Weight KG	Colour	▲T60 Watts	▲T60 BTU	Element Output	Element Type	Colour	▲T60 Watts	▲T60 BTU	Element Output	Element Type
650	450	400	65-80	80-95	5	1.78	3.26	Coloured	180	614	100W	A,A+,D,E,F,G	Chrome	142	485	100W	A,A+,D,E,F,G
650	600	550	65-80	80-95	5	2.01	3.57	Coloured	212	723	100W	A,A+,D,E,F,G	Chrome	166	566	100W	A,A+,D,E,F,G
1200	450	400	65-80	80-95	8	3.14	5.19	Coloured	315	1075	150W	A,A+,D,E,F,G	Chrome	247	843	150W	A,A+,D,E,F,G
1200	600	550	65-80	80-95	8	3.51	5.69	Coloured	365	1245	150W	A,A+,D,E,F,G	Chrome	286	976	150W	A,A+,D,E,F,G
1750	450	400	65-80	80-95	12	4.61	7.28	Coloured	464	1583	150W	A,A+,D,E,F,G	Chrome	366	1249	150W	A,A+,D,E,F,G
1750	600	550	65-80	80-95	12	5.18	8.04	Coloured	537	1832	300W	A,A+,D,E,F,G	Chrome	423	1443	150W	A,A+,D,E,F,G

BIAVA - THE MULTIRAIL RANGE

Biava Multirail - Straight

Height H (mm)	Width W (mm)	Tappings C (mm)	Tappings from wall - A (mm)	Distance from wall - D (mm)	Tube Qty	Water Content L	Weight KG	Colour	▲T60 Watts	▲T60 BTU	Element Output	Element Type	Colour	▲T60 Watts	▲T60 BTU	Element Output	Element Type
360	400	350	75-90	90-105	6	1.28	2.32	Coloured	145	495	100W	A,A+,D,E,F,G	Chrome	113	386	N/A	N/A
688	450	400	75-90	90-105	14	2.93	4.74	Coloured	344	1174	150W	A,A+,D,E,F,G	Chrome	270	921	150W	A,A+,D,E,F,G
688	600	550	75-90	90-105	14	3.60	5.72	Coloured	438	1494	150W	A,A+,D,E,F,G	Chrome	344	1174	150W	A,A+,D,E,F,G
688	750	700	75-90	90-105	14	4.27	6.70	Coloured	532	1815	300W	A,A+,D,E,F,G	Chrome	418	1426	150W	A,A+,D,E,F,G
1118	450	400	75-90	80-100	22	4.67	7.29	Coloured	546	1863	300W	A,A+,D,E,F,G	Chrome	430	1467	150W	A,A+,D,E,F,G
1118	600	550	75-90	80-100	22	5.72	8.83	Coloured	695	2371	300W	A,A+,D,E,F,G	Chrome	546	1863	300W	A,A+,D,E,F,G
1118	750	700	75-90	80-100	22	6.78	10.37	Coloured	843	2876	450W	A,A+,D,E,F,G	Chrome	663	2262	300W	A,A+,D,E,F,G
1720	450	400	75-90	80-100	34	7.20	10.99	Coloured	843	2876	450W	A,A+,D,E,F,G	Chrome	663	2262	300W	A,A+,D,E,F,G
1720	600	550	75-90	80-100	34	8.83	13.37	Coloured	1072	3658	600W	A,A+,D,E,F,G	Chrome	843	2876	450W	A,A+,D,E,F,G
1720	750	700	75-90	80-100	34	10.46	15.76	Coloured	1302	4442	750W	A,A+,D,E,F,G	Chrome	1024	3494	600W	A,A+,D,E,F,G

Biava Multirail - Curved

Height H (mm)	Width W (mm)	Tappings C (mm)	Tappings from wall - A (mm)	Distance from wall - D (mm)	Tube Qty	Water Content L	Weight KG	Colour	▲T60 Watts	▲T60 BTU	Element Output	Element Type	Colour	▲T60 Watts	▲T60 BTU	Element Output	Element Type
360	400	350	60-75	87-102	6	1.29	2.33	Coloured	145	495	100W	A,A+,D,E,F,G	Chrome	114	389	N/A	N/A
688	450	400	57-72	90-105	14	2.94	4.76	Coloured	347	1184	150W	A,A+,D,E,F,G	Chrome	273	931	150W	A,A+,D,E,F,G
688	600	550	50-65	98-113	14	3.62	5.74	Coloured	440	1501	150W	A,A+,D,E,F,G	Chrome	347	1184	150W	A,A+,D,E,F,G
688	750	700	75-90	194-214	14	4.42	6.86	Coloured	535	1825	300W	A,A+,D,E,F,G	Chrome	421	1436	150W	A,A+,D,E,F,G
1118	450	400	57-72	96-111	22	4.69	7.33	Coloured	550	1877	300W	A,A+,D,E,F,G	Chrome	433	1477	150W	A,A+,D,E,F,G
1118	600	550	50-65	104-119	22	5.75	8.87	Coloured	699	2385	300W	A,A+,D,E,F,G	Chrome	549	1873	300W	A,A+,D,E,F,G
1118	750	700	75-90	194-214	22	7.01	10.63	Coloured	846	2887	450W	A,A+,D,E,F,G	Chrome	666	2272	300W	A,A+,D,E,F,G
1720	450	400	57-72	96-111	34	7.24	11.06	Coloured	849	2897	450W	A,A+,D,E,F,G	Chrome	668	2279	300W	A,A+,D,E,F,G
1720	600	550	50-65	104-119	34	8.87	13.44	Coloured	1078	3678	600W	A,A+,D,E,F,G	Chrome	848	2893	450W	A,A+,D,E,F,G
1720	750	700	75-90	194-214	34	10.81	16.18	Coloured	1307	4459	750W	A,A+,D,E,F,G	Chrome	1029	3511	600W	A,A+,D,E,F,G

Biava Multirail Hidden Vent (HV) - Straight

Height H (mm)	Width W (mm)	Tappings C (mm)	Tappings from wall - A (mm)	Tube Qty	Water Content L	Weight KG	Colour	▲T60 Watts	▲T60 BTU	Element Output	Element Type	Colour	▲T60 Watts	▲T60 BTU	Element Output	Element Type
360	400	350	70-85	6	1.40	2.20	Coloured	145	495	100W	A,A+,D,E,F,G	Chrome	113	386	N/A	N/A
688	450	400	70-85	14	3.10	4.90	Coloured	344	1174	150W	A,A+,D,E,F,G	Chrome	270	921	150W	A,A+,D,E,F,G
688	600	550	70-85	14	3.70	5.90	Coloured	438	1494	150W	A,A+,D,E,F,G	Chrome	344	1174	150W	A,A+,D,E,F,G
688	750	700	70-85	14	4.40	7.00	Coloured	532	1815	300W	A,A+,D,E,F,G	Chrome	418	1426	150W	A,A+,D,E,F,G
1118	450	400	70-85	22	4.88	7.70	Coloured	546	1863	300W	A,A+,D,E,F,G	Chrome	430	1467	150W	A,A+,D,E,F,G
1118	600	550	70-85	22	5.94	9.40	Coloured	695	2371	300W	A,A+,D,E,F,G	Chrome	546	1863	300W	A,A+,D,E,F,G
1118	750	700	70-85	22	7.00	11.00	Coloured	843	2876	450W	A,A+,D,E,F,G	Chrome	663	2262	300W	A,A+,D,E,F,G
1720	450	400	70-85	34	7.53	11.90	Coloured	843	2876	450W	A,A+,D,E,F,G	Chrome	663	2262	300W	A,A+,D,E,F,G
1720	600	550	70-85	34	9.17	14.40	Coloured	1072	3658	600W	A,A+,D,E,F,G	Chrome	843	2876	450W	A,A+,D,E,F,G
1720	750	700	70-85	34	10.80	17.00	Coloured	1302	4442	750W	A,A+,D,E,F,G	Chrome	1024	3494	600W	A,A+,D,E,F,G



Tuscan



Biava Multirail Straight



Biava Multirail Curved



Biava Multirail HV Straight

Technical Tables & Drawings

TUSCAN

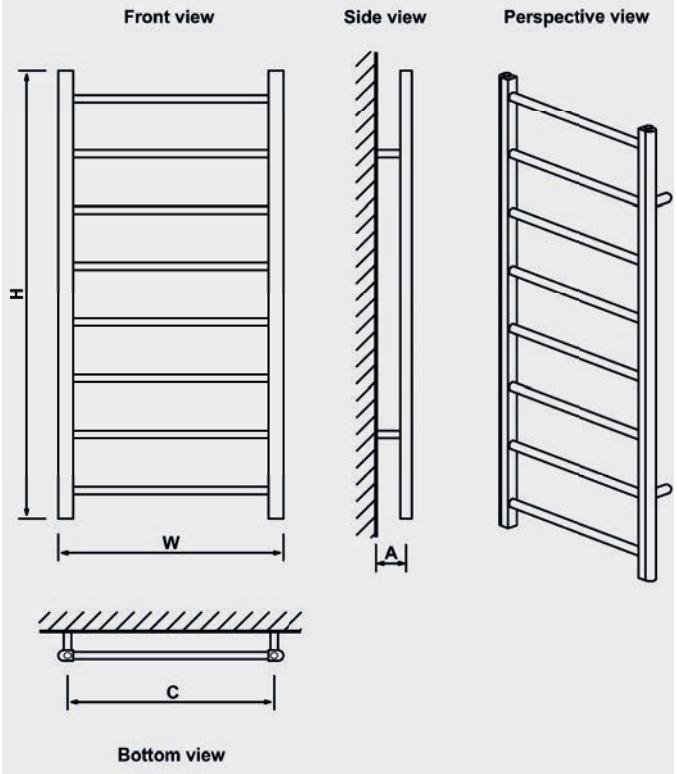

BIAVA MULTIRAIL - STRAIGHT

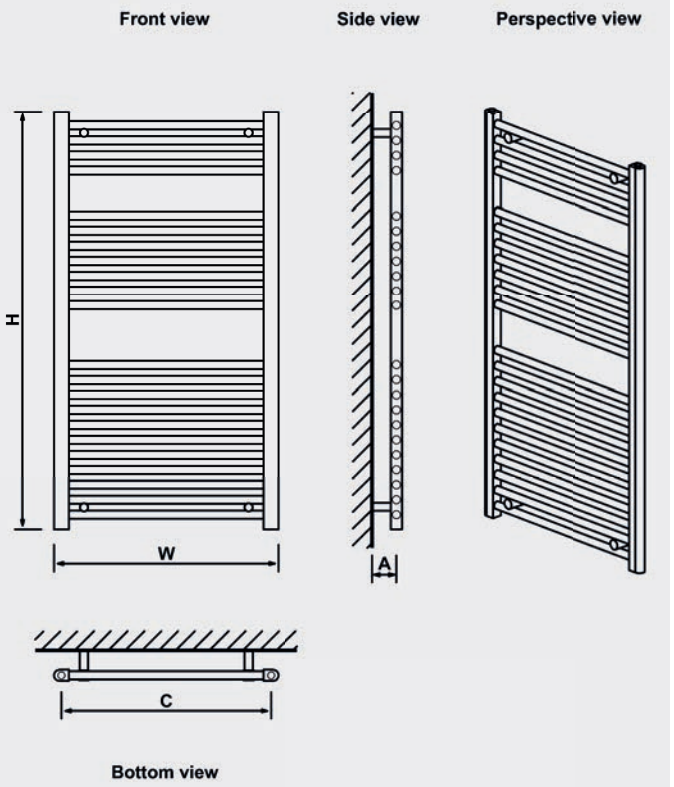

BIAVA MULTIRAIL - CURVED

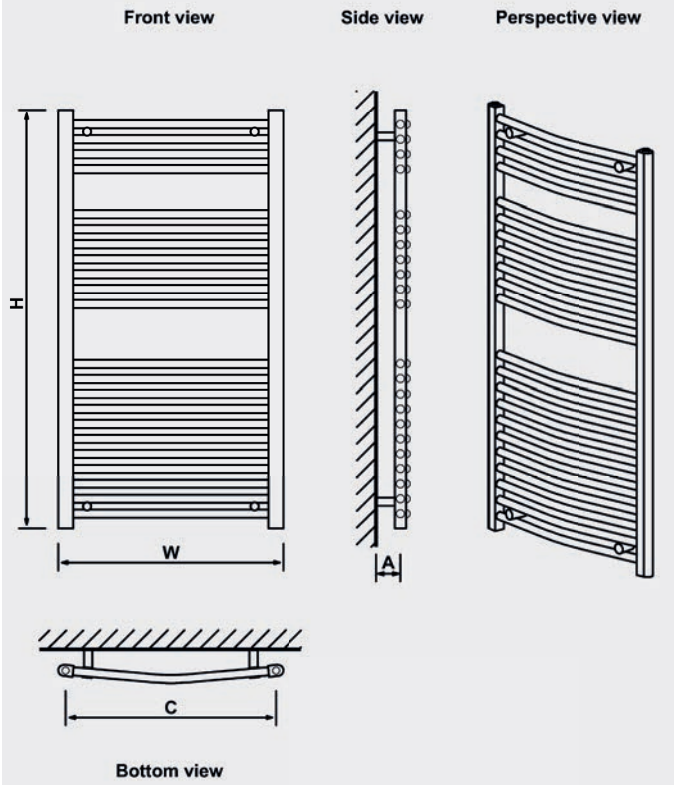

BIAVA HIDDEN VENT (HV) - STRAIGHT

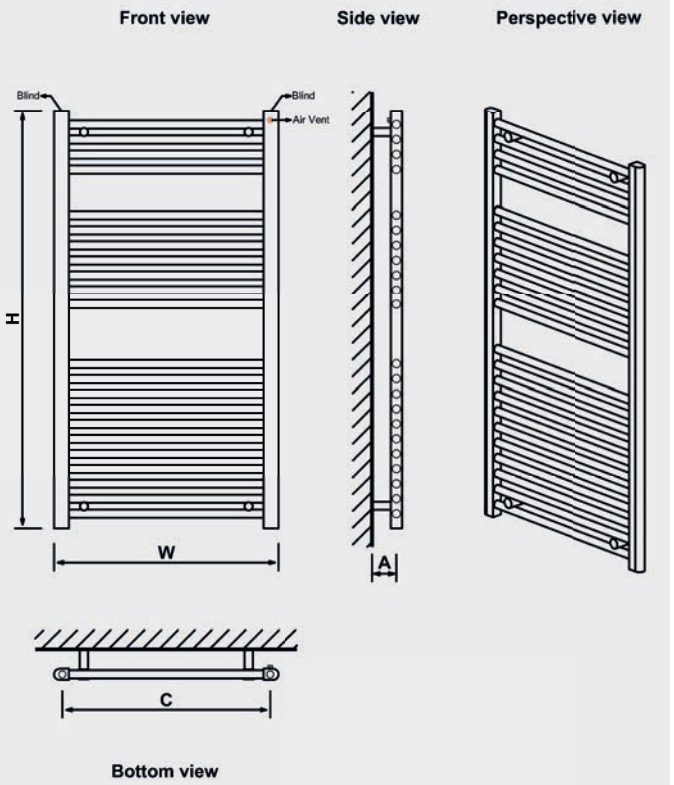

Technical Tables & Drawings

WESTWARD STRAIGHT - THE MULTIRAIL RANGE

Westward - Straight

Height H (mm)	Width W (mm)	Tappings C (mm)	Distance from wall - D (mm)	Tappings from wall - A (mm)	Tube Qty	Water Con-tent L	Weight KG	Colour	▲T60 Watts	▲T60 BTU	Element Output	Element Type	Colour	▲T60 Watts	▲T60 BTU	Element Output	Element Type
600	500	456	79	65	11	3.00	5.70	Coloured	371	1266	150W	A,A+,D,E,F,G	Chrome	245	836	150W	A,A+,D,E,F,G
600	600	556	79	65	11	3.50	6.40	Coloured	434	1481	150W	A,A+,D,E,F,G	Chrome	287	979	150W	A,A+,D,E,F,G
600	800	756	79	65	11	4.40	8.00	Coloured	560	1911	300W	A,A+,D,E,F,G	Chrome	371	1266	150W	A,A+,D,E,F,G
800	400	356	79	65	14	3.30	6.20	Coloured	399	1361	150W	A,A+,D,E,F,G	Chrome	263	897	150W	A,A+,D,E,F,G
800	500	456	79	65	14	3.90	7.20	Coloured	479	1634	300W	A,A+,D,E,F,G	Chrome	316	1078	150W	A,A+,D,E,F,G
800	600	556	79	65	14	4.50	8.20	Coloured	599	1907	300W	A,A+,D,E,F,G	Chrome	370	1262	150W	A,A+,D,E,F,G
1200	400	356	79	65	20	4.90	8.80	Coloured	550	1877	300W	A,A+,D,E,F,G	Chrome	375	1280	150W	A,A+,D,E,F,G
1200	500	456	79	65	20	5.70	10.30	Coloured	660	2252	300W	A,A+,D,E,F,G	Chrome	450	1535	150W	A,A+,D,E,F,G
1200	600	556	79	65	20	6.50	11.80	Coloured	768	2621	450W	A,A+,D,E,F,G	Chrome	524	1788	300W	A,A+,D,E,F,G
1800	400	356	79	65	30	7.30	13.00	Coloured	816	2784	450W	A,A+,D,E,F,G	Chrome	564	1924	300W	A,A+,D,E,F,G
1800	500	456	79	65	30	8.50	15.20	Coloured	978	3337	600W	A,A+,D,E,F,G	Chrome	677	2310	300W	A,A+,D,E,F,G
1800	600	556	79	65	30	9.80	17.40	Coloured	1140	3890	600W	A,A+,D,E,F,G	Chrome	788	2689	450W	A,A+,D,E,F,G

RION MULTIRAIL - THE MULTIRAIL RANGE

Rion Multirail

Height H (mm)	Width W (mm)	Tappings C (mm)	Distance from wall - D (mm)	Tappings from wall - A (mm)	Tube Qty	Water Content L	Weight KG	Colour	▲T60 Watts	▲T60 BTU	Element Output	Element Type	Colour	▲T60 Watts	▲T60 BTU	Element Output	Element Type
800	500	455	95	80	13	3.24	7.00	Coloured	419	1430	150W	A, A+, D, E, F, G	Chrome	269	918	100W	A, A+, D, E, F, G
800	600	555	95	80	13	3.65	8.20	Coloured	478	1631	150W	A, A+, D, E, F, G	Chrome	304	1038	100W	A, A+, D, E, F, G
1200	500	455	95	80	22	5.21	11.00	Coloured	649	2215	150W	A, A+, D, E, F, G	Chrome	420	1434	150W	A, A+, D, E, F, G
1200	600	555	95	80	22	5.89	13.03	Coloured	740	2525	300W	A, A+, D, E, F, G	Chrome	475	1621	150W	A, A+, D, E, F, G
1800	500	455	95	80	31	7.54	15.40	Coloured	985	3361	300W	A, A+, D, E, F, G	Chrome	653	2229	150W	A, A+, D, E, F, G
1800	600	555	95	80	31	8.50	18.40	Coloured	1122	3829	300W	A, A+, D, E, F, G	Chrome	738	2519	300W	A, A+, D, E, F, G

CORINIUM ROUND - THE MULTIRAIL RANGE

Corinium Round

Height H (mm)	Width W (mm)	Tappings C (mm)	Distance from wall - D (mm)	Tappings from wall - A (mm)	Tube Qty	Water Content L	Weight KG	Colour	▲T60 Watts	▲T60 BTU	Element Output	Element Type	Colour	▲T60 Watts	▲T60 BTU	Element Output	Element Type
800	500	458	106	85	12	3.90	5.07	Coloured	392	1338	150W	A,A+,D,E,F,G	Chrome	261	891	100W	A,A+,D,E,F,G
800	600	558	106	85	12	4.30	5.72	Coloured	458	1563	150W	A,A+,D,E,F,G	Chrome	305	1041	100W	A,A+,D,E,F,G
1200	500	458	106	85	18	5.80	7.43	Coloured	596	2034	150W	A,A+,D,E,F,G	Chrome	396	1352	150W	A,A+,D,E,F,G
1200	600	558	106	85	18	6.40	8.41	Coloured	696	2375	150W	A,A+,D,E,F,G	Chrome	462	1577	150W	A,A+,D,E,F,G
1800	500	458	106	85	27	8.70	10.98	Coloured	906	3092	300W	A,A+,D,E,F,G	Chrome	606	2068	150W	A,A+,D,E,F,G
1800	600	558	106	85	27	9.60	12.45	Coloured	1058	3610	300W	A,A+,D,E,F,G	Chrome	707	2413	150W	A,A+,D,E,F,G

TUSCAN ROUND - THE MULTIRAIL RANGE

Tuscan Round

Height H (mm)	Width W (mm)	Tappings C (mm)	Distance from wall - D (mm)	Tappings from wall - A (mm)	Tube Qty	Water Content L	Weight KG	Colour	▲T60 Watts	▲T60 BTU	Element Output	Element Type	Colour	▲T60 Watts	▲T60 BTU	Element Output	Element Type
800	500	458	106	85	7	3.10	4.04	Coloured	306	1045	100W	A,A+,D,E,F,G	Chrome	201	686	100W	A,A+,D,E,F,G
800	600	558	106	85	7	3.30	4.42	Coloured	352	1202	100W	A,A+,D,E,F,G	Chrome	232	792	100W	A,A+,D,E,F,G
1200	500	458	106	85	10	4.50	5.78	Coloured	459	1567	150W	A,A+,D,E,F,G	Chrome	303	1034	100W	A,A+,D,E,F,G
1200	600	558	106	85	10	4.80	6.33	Coloured	529	1805	150W	A,A+,D,E,F,G	Chrome	350	1195	100W	A,A+,D,E,F,G
1800	500	458	106	85	15	6.70	8.51	Coloured	688	2348	150W	A,A+,D,E,F,G	Chrome	454	1550	150W	A,A+,D,E,F,G
1800	600	558	106	85	15	7.20	9.32	Coloured	794	2710	300W	A,A+,D,E,F,G	Chrome	525	1792	150W	A,A+,D,E,F,G



Westward Straight



Rion Multirail



Corinium Round



Tuscan Round

Technical Tables & Drawings

WESTWARD - STRAIGHT

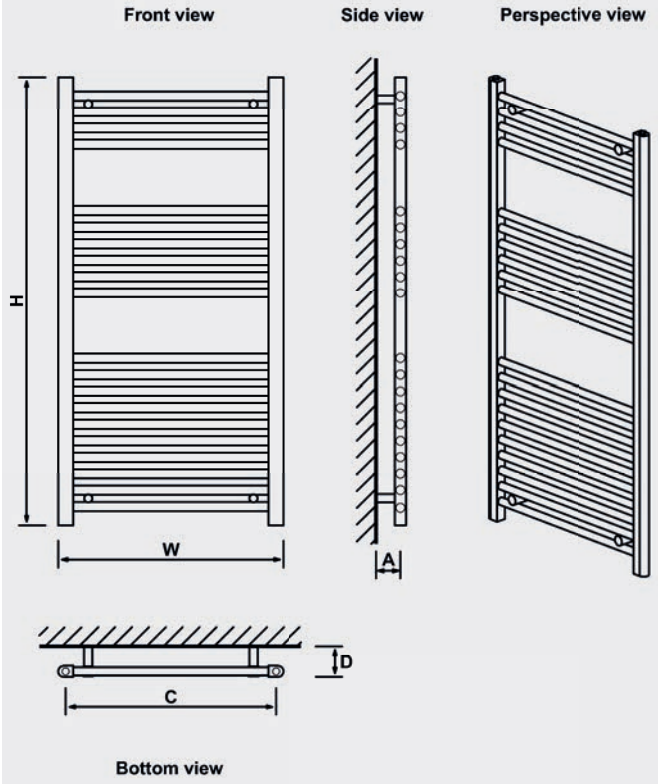

RION MULTIRAIL

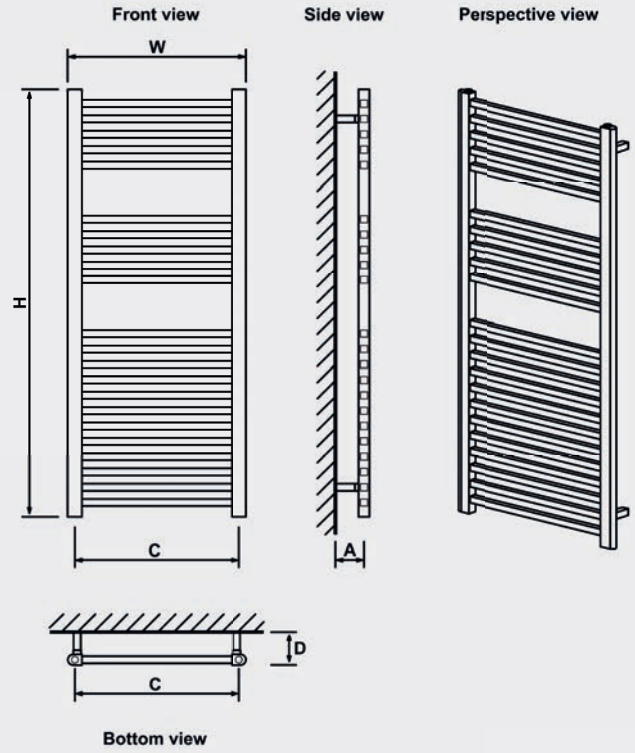

CORINIUM ROUND

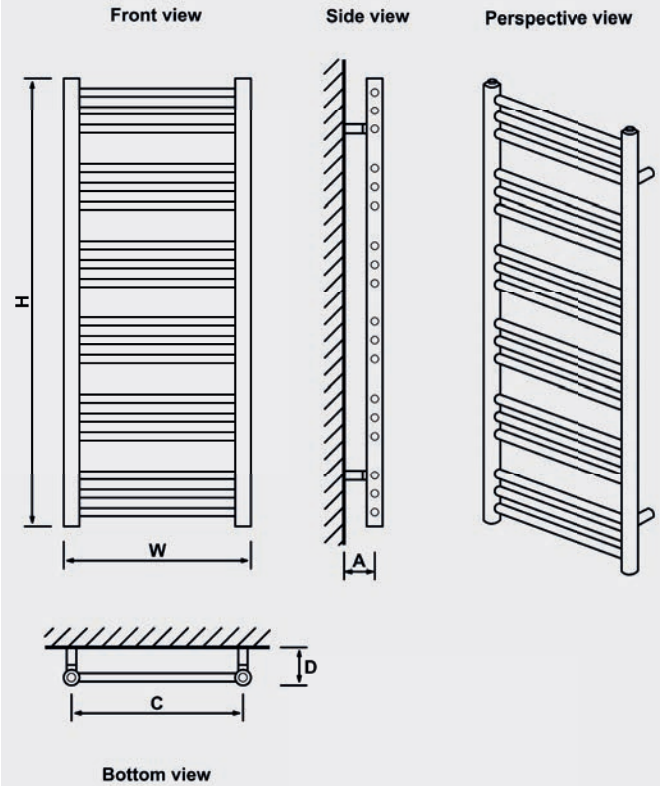

TUSCAN ROUND

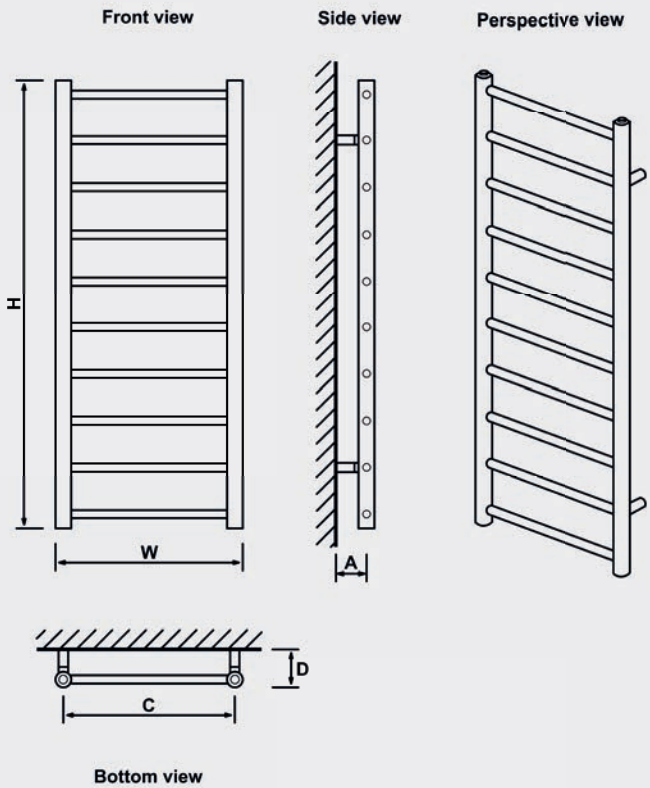

Technical Tables & Drawings

BIAVA ROUND - MULTIRAIL RANGE

Biava Round

Height H (mm)	Width W (mm)	Tappings C (mm)	Tappings from wall - D (mm)	Distance from wall - D (mm)	Tube Qty	Water Content L	Weight KG	Colour	▲T60 Watts	▲T60 BTU	Element Output	Element Type	Colour	▲T60 Watts	▲T60 BTU	Element Output	Element Type
600	400	362	63-73	82-92	10	1.91	3.67	Coloured	218	744	100W	A, A+, D, E, F, G	Chrome	172	587	100W	A, A+, D, E, F, G
600	500	462	63-73	82-92	10	2.14	4.07	Coloured	257	877	150W	A, A+, D, E, F, G	Chrome	202	689	100W	A, A+, D, E, F, G
600	600	562	63-73	82-92	10	2.37	4.47	Coloured	296	1010	150W	A, A+, D, E, F, G	Chrome	234	798	150W	A, A+, D, E, F, G
1200	400	362	63-73	82-92	18	3.66	6.25	Coloured	412	1406	150W	A, A+, D, E, F, G	Chrome	324	1105	150W	A, A+, D, E, F, G
1200	500	462	63-73	82-92	18	4.08	6.97	Coloured	482	1645	300W	A, A+, D, E, F, G	Chrome	379	1293	150W	A, A+, D, E, F, G
1200	600	562	63-73	82-92	18	4.50	7.69	Coloured	552	1883	300W	A, A+, D, E, F, G	Chrome	435	1484	150W	A, A+, D, E, F, G
1800	400	362	63-73	82-92	27	5.50	8.96	Coloured	618	2109	300W	A, A+, D, E, F, G	Chrome	486	1658	300W	A, A+, D, E, F, G
1800	500	462	63-73	82-92	27	6.12	10.04	Coloured	723	2467	450W	A, A+, D, E, F, G	Chrome	569	1941	300W	A, A+, D, E, F, G
1800	600	562	63-73	82-92	27	6.75	11.12	Coloured	827	2822	450W	A, A+, D, E, F, G	Chrome	651	2221	300W	A, A+, D, E, F, G

BIAVA TUBE ON TUBE - MULTIRAIL RANGE

Biava Tube on Tube

Height H (mm)	Width W (mm)	Tappings C (mm)	Tappings from wall - D (mm)	Distance from wall - D (mm)	Tube Qty	Water Content L	Weight KG	Colour	▲T60 Watts	▲T60 BTU	Element Output	Element Type	Colour	▲T60 Watts	▲T60 BTU	Element Output	Element Type
600	400	350	51-66	85-100	10	1.72	3.34	-	-	-	-	-	Chrome	183	624	100W	A, A+, D, E, F, G
600	500	450	51-66	85-100	10	1.95	3.74	-	-	-	-	-	Chrome	214	730	100W	A, A+, D, E, F, G
600	600	550	51-66	85-100	10	2.18	4.14	-	-	-	-	-	Chrome	245	836	150W	A, A+, D, E, F, G
1200	400	350	51-66	85-100	25	3.89	7.05	-	-	-	-	-	Chrome	428	1460	150W	A, A+, D, E, F, G
1200	500	450	51-66	85-100	25	4.47	8.05	-	-	-	-	-	Chrome	505	1723	300W	A, A+, D, E, F, G
1200	600	550	51-66	85-100	25	5.05	9.05	-	-	-	-	-	Chrome	580	1979	300W	A, A+, D, E, F, G
1800	400	350	51-66	85-100	39	5.98	10.59	-	-	-	-	-	Chrome	661	2255	300W	A, A+, D, E, F, G
1800	500	450	51-66	85-100	39	6.88	12.15	-	-	-	-	-	Chrome	780	2661	450W	A, A+, D, E, F, G
1800	600	550	51-66	85-100	39	7.79	13.71	-	-	-	-	-	Chrome	898	3064	450W	A, A+, D, E, F, G

LAUNTON - THE MULTIRAIL RANGE

Launton

Height H (mm)	Width W (mm)	Tappings C (mm)	Distance from wall - D (mm)	Tappings from wall - A (mm)	Tube Qty	Water Content L	Weight KG	Colour	▲T60 Watts	▲T60 BTU	Element Output	Element Type	Colour	▲T60 Watts	▲T60 BTU	Element Output	Element Type
1200	500	470	255-270	70-85	11	4.00	8.30	Coloured	439	1496	150W	A, A+, D, E, F, G	Chrome	290	991	150W	A, A+, D, E, F, G
1200	600	570	255-270	70-85	11	4.40	9.30	Coloured	489	1670	300W	A, A+, D, E, F, G	Chrome	324	1106	150W	A, A+, D, E, F, G

HADDENHAM - THE MULTIRAIL RANGE

Haddenham

Height H (mm)	Width W (mm)	Tappings C (mm)	Distance from wall - D (mm)	Tappings from wall - A (mm)	Tube Qty	Water Content L	Weight KG	Colour	▲T60 Watts	▲T60 BTU	Element Output	Element Type	Colour	▲T60 Watts	▲T60 BTU	Element Output	Element Type
1200	500	455	255-270	70-85	25	6.10	9.50	Coloured	645	2200	300W	A, A+, D, E, F, G	Chrome	427	1457	150W	A, A+, D, E, F, G
1200	600	555	255-270	70-85	25	6.90	10.80	Coloured	732	2499	450W	A, A+, D, E, F, G	Chrome	485	1655	300W	A, A+, D, E, F, G



Biava Round



Biava Tube on Tube



Lauton



Haddenham

Technical Tables & Drawings

BIAVA ROUND

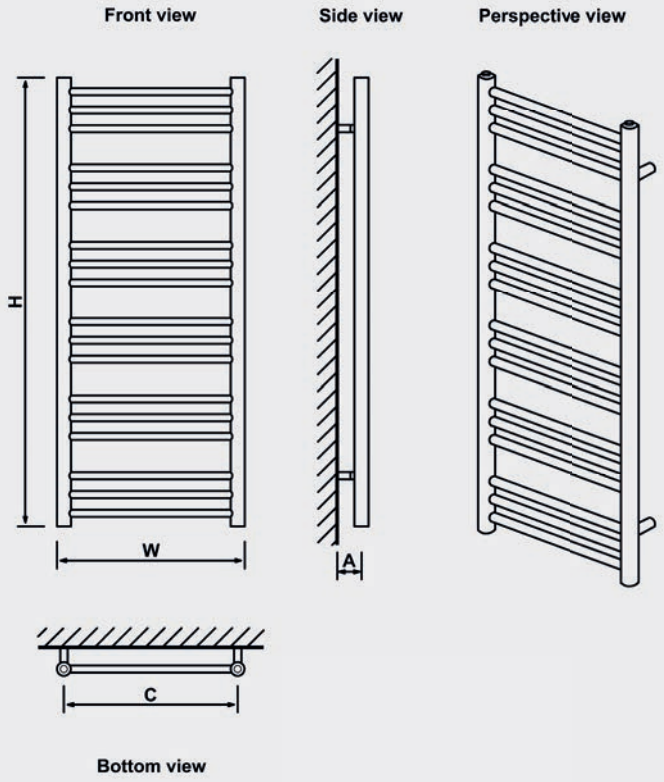

BIAVA TUBE ON TUBE

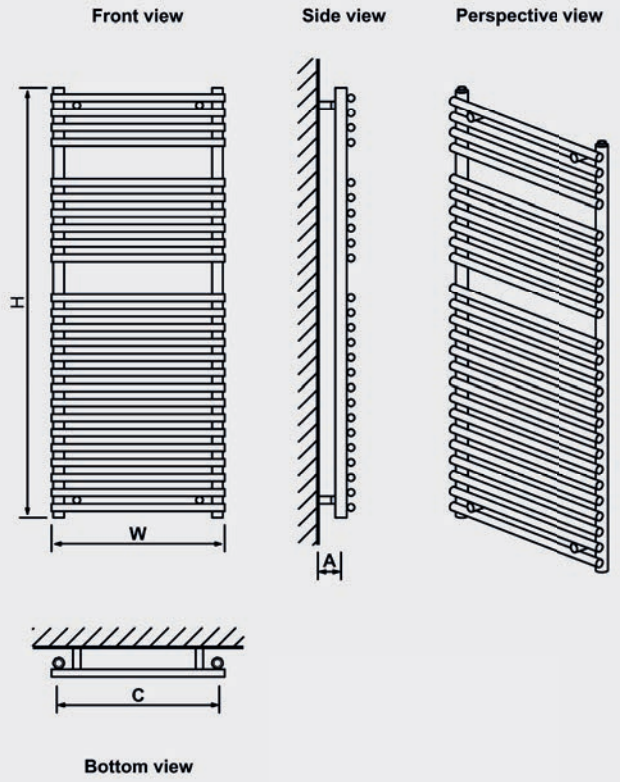

LAUNTON

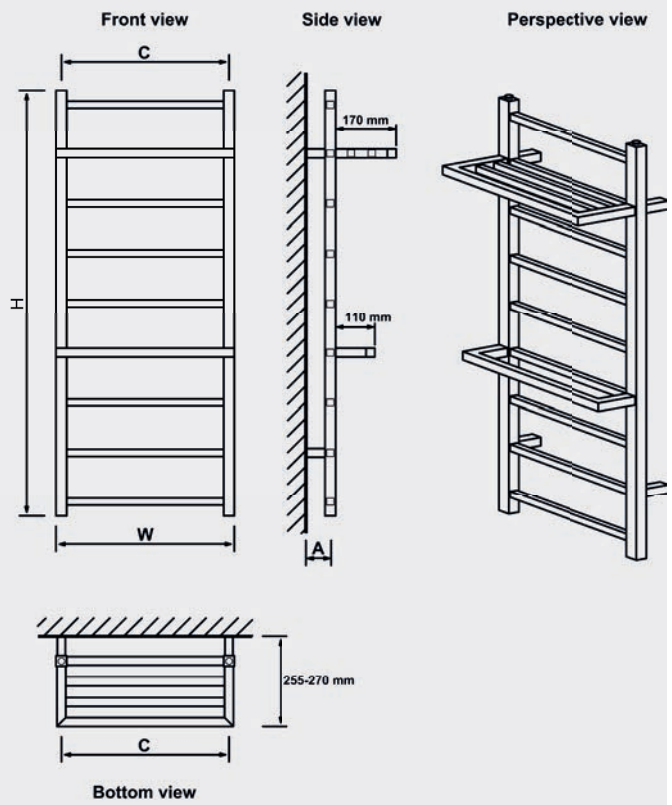

HADDENHAM

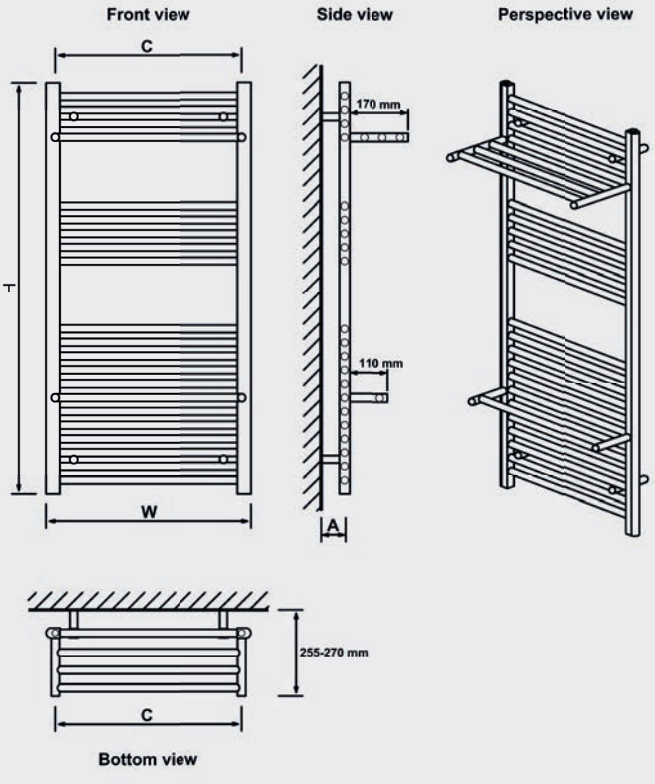

Technical Tables & Drawings

BIAVA SQUARE - MULTIRAIL RANGE

Biava Square

Height H (mm)	Width W (mm)	Tappings C (mm)	Tappings from wall - A (mm)	Distance from wall - D (mm)	Tube Qty	Water Content L	Weight KG	Colour	▲T60 Watts	▲T60 BTU	Element Output	Element Type	Colour	▲T60 Watts	▲T60 BTU	Element Output	Element Type
600	400	360	61-76	82-100	9	2.77	4.56	-	-	-	-	-	Chrome	221	754	100W	A, A+, D, E, F, G
600	500	460	61-76	82-100	9	3.12	5.19	-	-	-	-	-	Chrome	260	887	150W	A, A+, D, E, F, G
600	600	560	61-76	82-100	9	3.47	5.83	-	-	-	-	-	Chrome	299	1020	150W	A, A+, D, E, F, G
1200	400	360	61-76	82-100	23	6.17	9.77	-	-	-	-	-	Chrome	511	1744	300W	A, A+, D, E, F, G
1200	500	460	61-76	82-100	23	7.07	11.39	-	-	-	-	-	Chrome	612	2088	300W	A, A+, D, E, F, G
1200	600	560	61-76	82-100	23	7.97	13.02	-	-	-	-	-	Chrome	712	2429	300W	A, A+, D, E, F, G
1800	400	360	61-76	82-100	33	9.06	14.05	-	-	-	-	-	Chrome	746	2545	450W	A, A+, D, E, F, G
1800	500	460	61-76	82-100	33	10.35	16.38	-	-	-	-	-	Chrome	889	3033	450W	A, A+, D, E, F, G
1800	600	560	61-76	82-100	33	11.65	18.71	-	-	-	-	-	Chrome	1034	3528	600W	A, A+, D, E, F, G

TUSCAN SQUARE - MULTIRAIL RANGE

Tuscan Square

Height H (mm)	Width W (mm)	Tappings C (mm)	Distance from wall - D (mm)	Tappings from wall - A (mm)	Tube Qty	Water Content L	Weight KG	Colour	▲T60 Watts	▲T60 BTU	Element Output	Element Type	Colour	▲T60 Watts	▲T60 BTU	Element Output	Element Type
800	500	470	95	80	7	2.10	4.60	Coloured	305	1041	100W	A, A+, D, E, F, G	Chrome	201	686	100W	A, A+, D, E, F, G
800	600	570	95	80	7	2.30	4.90	Coloured	349	1191	150W	A, A+, D, E, F, G	Chrome	231	789	100W	A, A+, D, E, F, G
1200	500	470	95	80	10	3.10	6.90	Coloured	460	1570	150W	A, A+, D, E, F, G	Chrome	302	1031	100W	A, A+, D, E, F, G
1200	600	570	95	80	10	3.40	7.10	Coloured	527	1799	150W	A, A+, D, E, F, G	Chrome	347	1184	150W	A, A+, D, E, F, G
1800	500	470	95	80	15	4.70	10.30	Coloured	688	2348	300W	A, A+, D, E, F, G	Chrome	458	1563	150W	A, A+, D, E, F, G
1800	600	570	95	80	15	5.10	11.00	Coloured	789	2693	300W	A, A+, D, E, F, G	Chrome	526	1795	150W	A, A+, D, E, F, G

TUSCAN SQUARE MULTIRAIL - MULTIRAIL RANGE

Tuscan Square Multirail

Height H (mm)	Width W (mm)	Tappings C (mm)	Distance from wall - D (mm)	Tappings from wall - A (mm)	Tube Qty	Water Content L	Weight KG	Colour	▲T60 Watts	▲T60 BTU	Element Output	Element Type	Colour	▲T60 Watts	▲T60 BTU	Element Output	Element Type
800	500	470	95	80	13	2.94	8.53	Coloured	425	1451	150W	A, A+, D, E, F, G	Chrome	274	935	100W	A, A+, D, E, F, G
800	600	570	95	80	13	3.34	10.22	Coloured	497	1696	150W	A, A+, D, E, F, G	Chrome	316	1079	100W	A, A+, D, E, F, G
1200	500	470	95	80	22	4.75	11.9	Coloured	662	2259	150W	A, A+, D, E, F, G	Chrome	426	1454	150W	A, A+, D, E, F, G
1200	600	570	95	80	22	5.43	13.9	Coloured	775	2645	300W	A, A+, D, E, F, G	Chrome	491	1676	150W	A, A+, D, E, F, G
1800	500	470	95	80	31	6.85	16.89	Coloured	980	3344	300W	A, A+, D, E, F, G	Chrome	645	2201	150W	A, A+, D, E, F, G
1800	600	570	95	80	31	7.81	19.4	Coloured	1147	3914	300W	A, A+, D, E, F, G	Chrome	744	2539	300W	A, A+, D, E, F, G

BIAVA DRY ELEMENT - DRY ELEMENT RANGE

Biava Dry Element

Height H (mm)	Width W (mm)	Tappings C (mm)	Distance from wall - D (mm)	Tappings from wall - A (mm)	Tube Qty	Water Content L	Weight KG	Colour	▲T60 Watts	▲T60 BTU	Element Output	Element Type	Colour	▲T60 Watts	▲T60 BTU	Element Output	Element Type
700	500	N/A	99-115	N/A	12	N/A	5.30	Coloured	250	853	N/A	N/A	Chrome	250	853	N/A	N/A
700	600	N/A	99-115	N/A	12	N/A	5.50	Coloured	300	1024	N/A	N/A	Chrome	300	1024	N/A	N/A
1100	500	N/A	99-115	N/A	20	N/A	7.50	Coloured	400	1365	N/A	N/A	Chrome	400	1365	N/A	N/A
1100	600	N/A	99-115	N/A	20	N/A	8.40	Coloured	500	1706	N/A	N/A	Chrome	500	1706	N/A	N/A



Biava Square



Tuscan Square



Tuscan Square Multirail



Biava Dry Element

Technical Tables & Drawings

BIAVA SQUARE

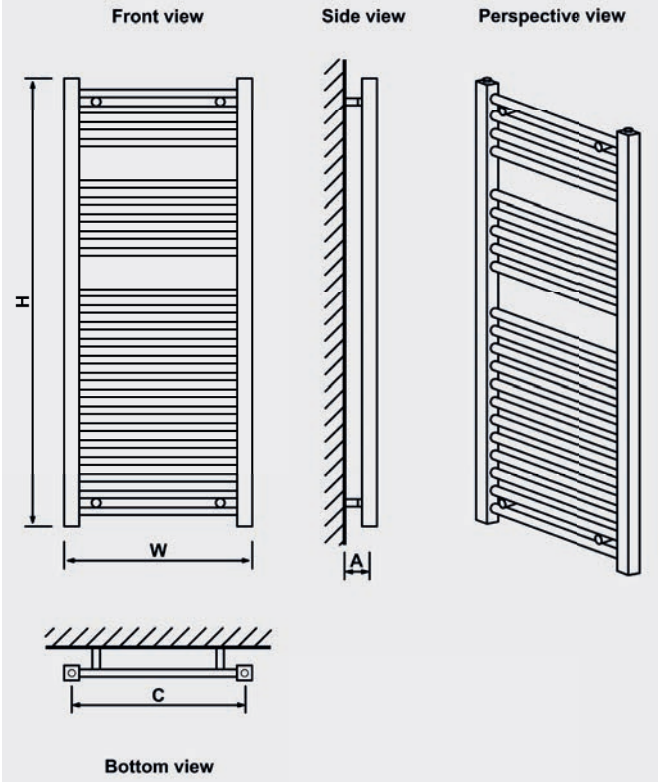

TUSCAN SQUARE

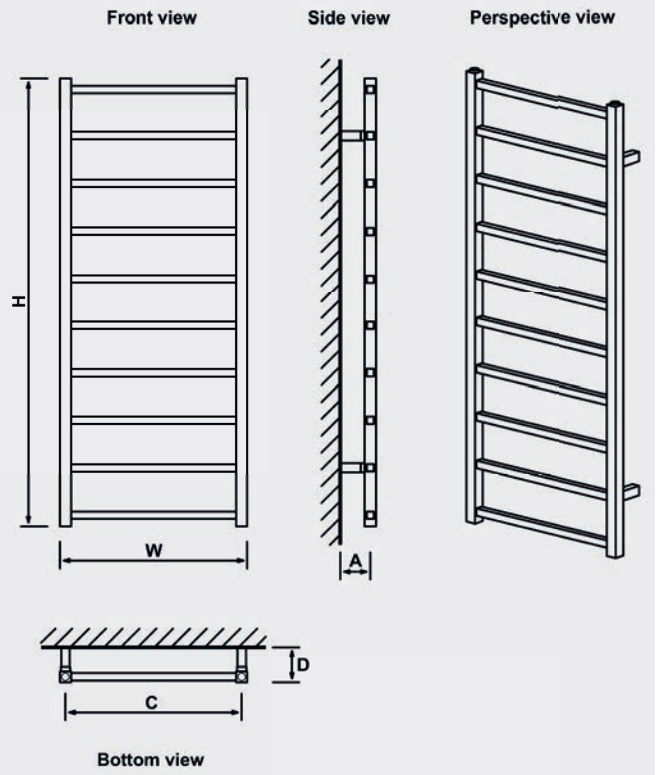

TUSCAN SQUARE MULTIRAIL

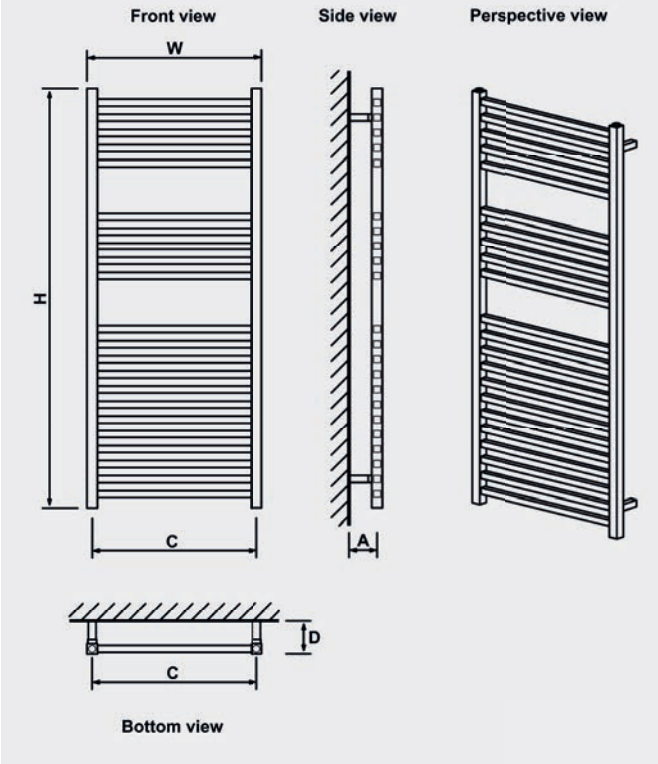

BIAVA DRY ELEMENT

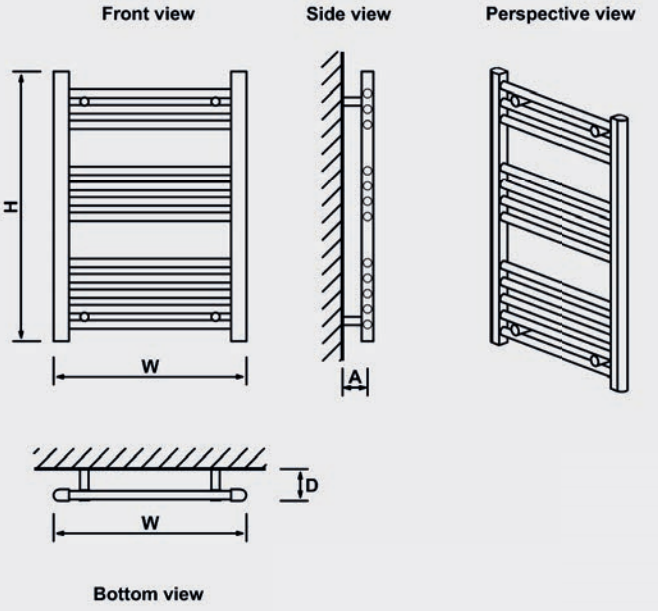

Technical Tables & Drawings

EMSBURY DRY ELEMENT - DRY ELEMENT RANGE

Emsbury Dry Element

Height H (mm)	Width W (mm)	Tappings C (mm)	Distance from wall - D (mm)	Tappings from wall - A (mm)	Tube Qty	Water Content L	Weight KG	Colour	▲T60 Watts	▲T60 BTU	Element Output	Element Type	Colour	▲T60 Watts	▲T60 BTU	Element Output	Element Type
800	500	N/A	92	N/A	8	N/A	4.90	Polished	150	512	N/A	N/A	-	-	-	-	-
800	600	N/A	92	N/A	8	N/A	5.69	Polished	200	683	N/A	N/A	-	-	-	-	-
1200	500	N/A	92	N/A	12	N/A	6.55	Polished	250	854	N/A	N/A	-	-	-	-	-
1200	600	N/A	92	N/A	12	N/A	7.44	Polished	300	1024	N/A	N/A	-	-	-	-	-

LODDON DRY ELEMENT - DRY ELEMENT RANGE

Loddon Dry Element

Height H (mm)	Width W (mm)	Tappings C (mm)	Distance from wall - D (mm)	Tappings from wall - A (mm)	Tube Qty	Water Content L	Weight KG	Colour	▲T60 Watts	▲T60 BTU	Element Output	Element Type	Colour	▲T60 Watts	▲T60 BTU	Element Output	Element Type
800*	500	N/A	100	N/A	9	N/A	6.65	Coloured	300	1024	N/A	N/A	Chrome	300	1024	N/A	N/A
800*	600	N/A	100	N/A	9	N/A	7.17	Coloured	350	1195	N/A	N/A	Chrome	350	1195	N/A	N/A
1200	500	N/A	100	N/A	15	N/A	10.00	Coloured	450	1536	N/A	N/A	Chrome	450	1536	N/A	N/A
1200	600	N/A	100	N/A	15	N/A	10.64	Coloured	500	1707	N/A	N/A	Chrome	500	1707	N/A	N/A

* The total height of this rail is 780mm

KENNET DRY ELEMENT - DRY ELEMENT RANGE

Kennet Dry Element

Height H (mm)	Width W (mm)	Tappings C (mm)	Distance from wall - D (mm)	Tappings from wall - A (mm)	Tube Qty	Water Content L	Weight KG	Colour	▲T60 Watts	▲T60 BTU	Element Output	Element Type	Colour	▲T60 Watts	▲T60 BTU	Element Output	Element Type
700*	500	N/A	130	N/A	3	N/A	7.47	Coloured	120	410	N/A	N/A	Chrome	120	410	N/A	N/A
700*	600	N/A	130	N/A	3	N/A	8.52	Coloured	150	512	N/A	N/A	Chrome	150	512	N/A	N/A
1200**	500	N/A	130	N/A	5	N/A	12.10	Coloured	200	683	N/A	N/A	Chrome	200	683	N/A	N/A
1200**	600	N/A	130	N/A	5	N/A	13.66	Coloured	230	785	N/A	N/A	Chrome	230	785	N/A	N/A

* Height shown excludes bottom control leg. Total height is 744.5mm ** Height shown excludes bottom control leg. Total height is 1253mm

VIOLLA - STAINLESS STEEL RANGE

Violla

Height H (mm)	Width W (mm)	Tappings C (mm)	Distance from wall - D (mm)	Tappings from wall - A (mm)	Tube Qty	Water Content L	Weight KG	Colour	▲T60 Watts	▲T60 BTU	Element Output	Element Type
590	1000	968	100	84	6	2.14	3.40	Polished	231	788	150W	A, A+, D, E, F, G
790	500	468	100	84	9	2.00	3.20	Polished	199	679	100W	A, A+, D, E, F, G
790	600	568	100	84	9	2.22	3.60	Polished	226	771	150W	A, A+, D, E, F, G
1210	500	468	100	84	15	3.20	5.20	Polished	320	1092	150W	A, A+, D, E, F, G
1210	600	568	100	84	15	3.56	5.60	Polished	366	1249	150W	A, A+, D, E, F, G
1630	500	468	100	84	19	4.18	6.60	Polished	416	1419	150W	A, A+, D, E, F, G
1630	600	568	100	84	19	4.63	8.00	Polished	474	1617	300W	A, A+, D, E, F, G



Emsbury Dry Element



Loddon Dry Element



Kennet Dry Element



Violla

Technical Tables & Drawings

EMSBURY DRY ELEMENT

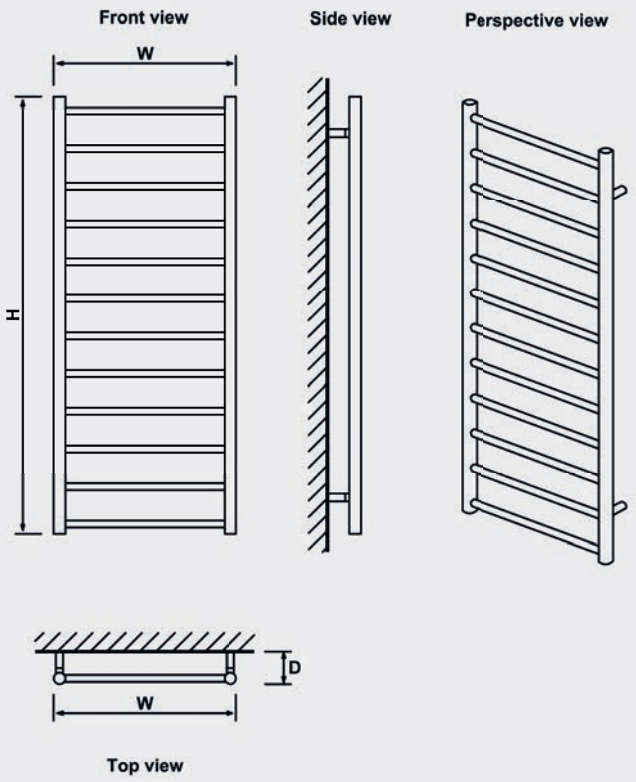

LODDON DRY ELEMENT

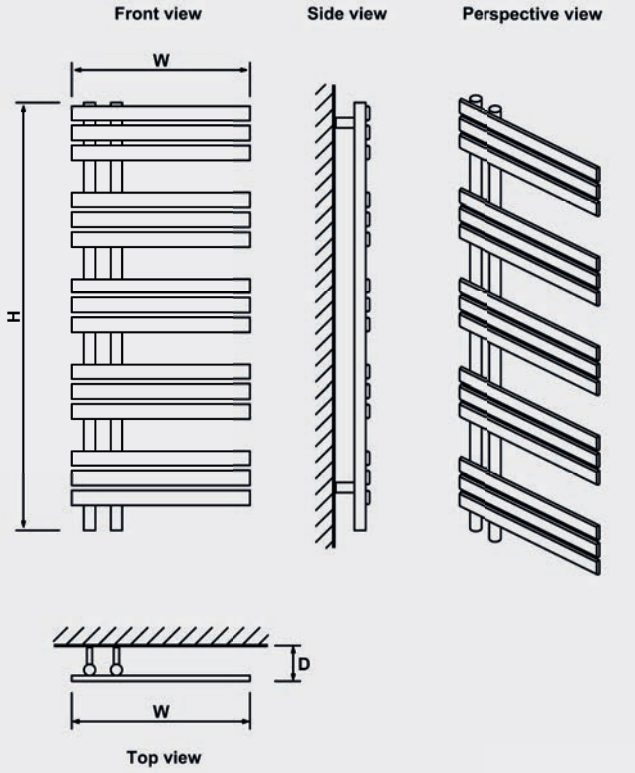

KENNET DRY ELEMENT

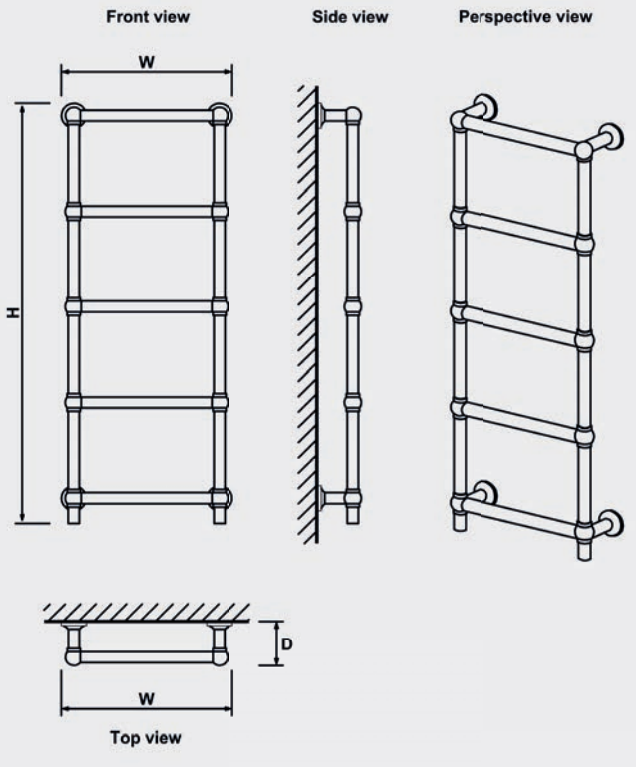

VIOLLA

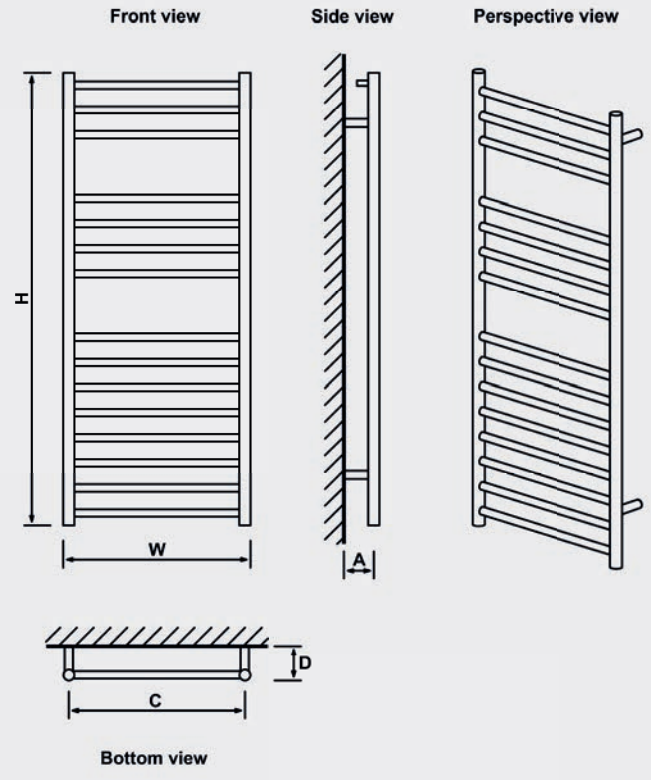

Technical Tables & Drawings

RIZANO - STAINLESS STEEL RANGE

Rizano

Height H (mm)	Width W (mm)	Tappings C (mm)	Distance from wall - D (mm)	Tappings from wall - A (mm)	Tube Qty	Water Content L	Weight KG	Colour	▲T60 Watts	▲T60 BTU	Element Output	Element Type
1000	500	50	95	65	15	3.50	7.50	Polished	545	1859	300W	A, A+, D, E
1000	600	50	95	65	15	4.10	9.60	Polished	626	2136	300W	A, A+, D, E

BIAVA FLAT - STAINLESS STEEL RANGE

Biava Flat

Height H (mm)	Width W (mm)	Tappings C (mm)	Distance from wall - D (mm)	Tappings from wall - A (mm)	Tube Qty	Water Content L	Weight KG	Colour	▲T60 Watts	▲T60 BTU	Element Output	Element Type
1190	500	420	95	65	13	3.40	9.50	Polished	621	2119	300W	A, A+, D, E
1190	600	520	95	65	13	4.00	10.30	Polished	712	2429	300W	A, A+, D, E

ASCONA - STAINLESS STEEL RANGE

Ascona

Height H (mm)	Width W (mm)	Tappings C (mm)	Distance from wall - D (mm)	Tappings from wall - A (mm)	Tube Qty	Water Content L	Weight KG	Colour	▲T60 Watts	▲T60 BTU	Element Output	Element Type
420	500	440	130	65	6	1.60	4.70	Polished	280	955	150W	A, A+, D, E

LEONARDO - DESIGNER RANGE

Leonardo

Height H (mm)	Width W (mm)	Tappings C (mm)	Tappings from wall - A (mm)	Distance from wall - D (mm)	Tube Qty	Water Content L	Weight KG	Colour	▲T60 Watts	▲T60 BTU	Element Output	Element Type	Colour	▲T60 Watts	▲T60 BTU	Element Output	Element Type
600	400	80	63-73	97-112	8	2.36	6.16	-	-	-	-	-	Chrome	244	833	150W	A, A+, D, E, F, G
600	500	80	63-73	97-112	8	2.71	8.95	-	-	-	-	-	Chrome	288	983	150W	A, A+, D, E, F, G
600	600	80	63-73	97-112	8	3.06	7.99	-	-	-	-	-	Chrome	332	1133	150W	A, A+, D, E, F, G
688	500	80	63-73	97-112	9	3.07	7.87	-	-	-	-	-	Chrome	324	1105	150W	A, A+, D, E, F, G
1200	400	80	63-73	97-112	15	4.54	10.92	-	-	-	-	-	Chrome	465	1587	150W	A, A+, D, E, F, G
1200	500	80	63-73	97-112	15	5.20	12.63	-	-	-	-	-	Chrome / Brushed Brass	548	1870	300W	A, A+, D, E, F, G
1200	600	80	63-73	97-112	15	5.85	14.34	-	-	-	-	-	Chrome / Brushed Brass	631	2153	300W	A, A+, D, E, F, G
1450	500	80	63-73	97-112	18	6.25	15.00	-	-	-	-	-	Chrome	658	2245	300W	A, A+, D, E, F, G
1800	400	80	63-73	97-112	21	6.55	15.19	-	-	-	-	-	Chrome	665	2269	300W	A, A+, D, E, F, G
1800	500	80	63-73	97-112	21	7.47	17.59	-	-	-	-	-	Chrome	780	2661	450W	A, A+, D, E, F, G
1800	600	80	63-73	97-112	21	8.39	19.99	-	-	-	-	-	Chrome	896	3057	450W	A, A+, D, E, F, G



Rizano



Biava Flat



Ascona



Leonardo

Technical Tables & Drawings

RIZANO

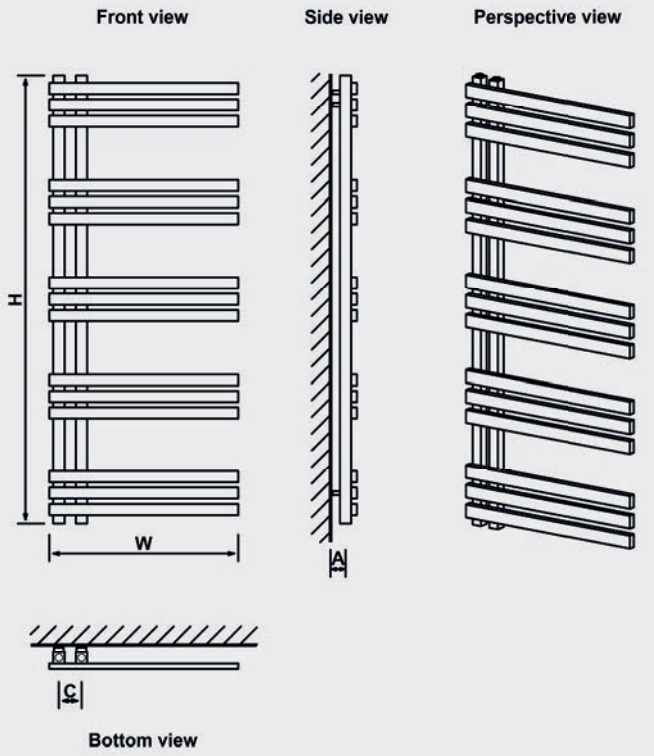

BIAVA FLAT

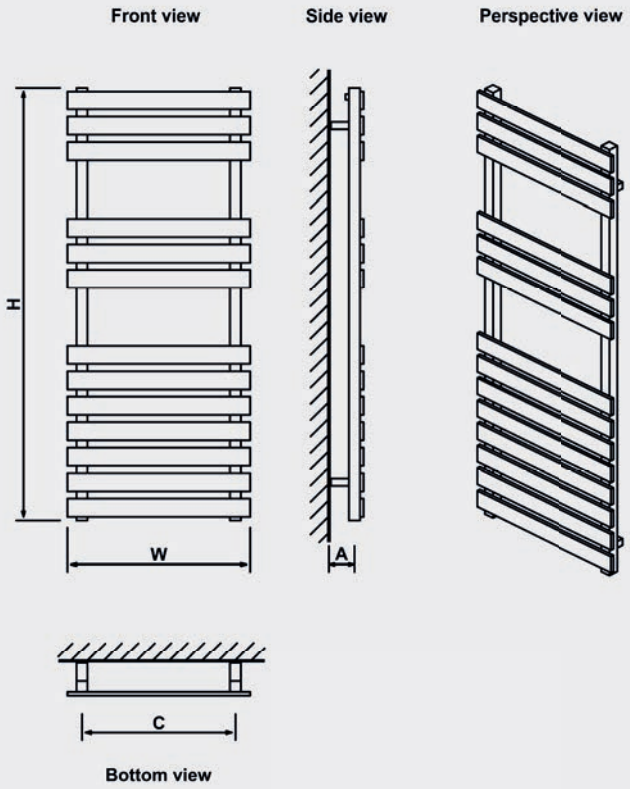

ASCONA

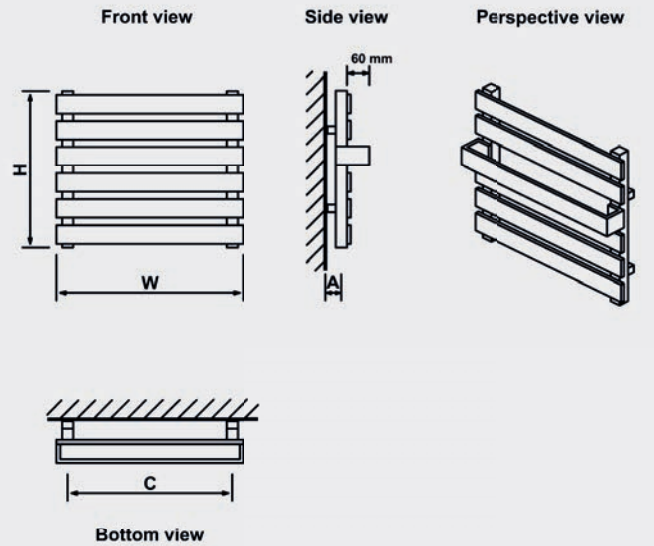

LEONARDO

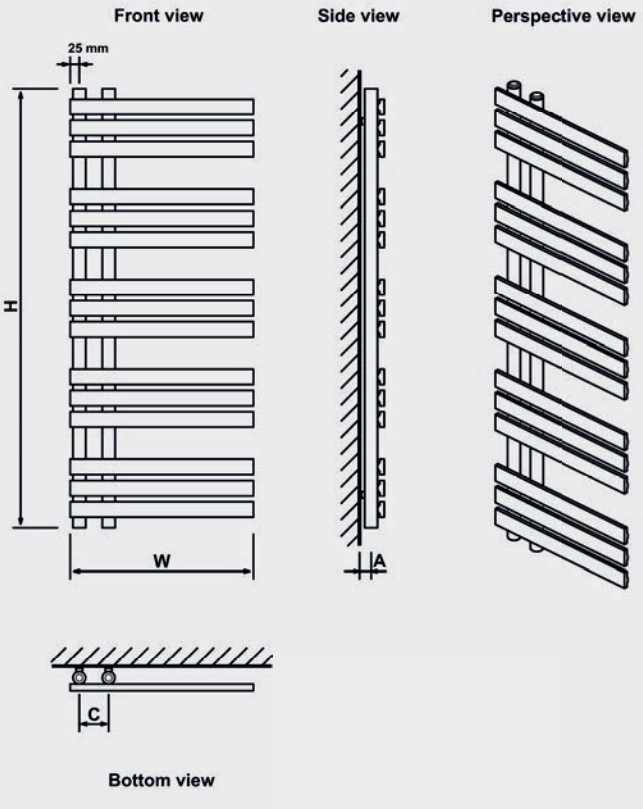

Technical Tables & Drawings

STAVERTON TUBE ON TUBE STRAIGHT - DESIGNER RANGE

Staverton Tube on Tube - Straight

Height H (mm)	Width W (mm)	Tappings C (mm)	Tappings from wall - A (mm)	Distance from wall - D (mm)	Tube Qty	Water Content L	Weight KG	Colour	▲T60 Watts	▲T60 BTU	Element Output	Element Type	Colour	▲T60 Watts	▲T60 BTU	Element Output	Element Type
600	400	350	63-73	96-108	7	2.73	7.10	Coloured	364	1242	150W	A, A+, D, E, F, G	Chrome	288	983	150W	A, A+, D, E, F, G
600	500	450	63-73	96-108	7	3.13	8.21	Coloured	432	1474	150W	A, A+, D, E, F, G	Chrome	340	1160	150W	A, A+, D, E, F, G
600	600	550	63-73	96-108	7	3.53	9.32	Coloured	500	1706	300W	A, A+, D, E, F, G	Chrome	394	1344	150W	A, A+, D, E, F, G
600	1000	950	73-83	96-108	7	5.13	13.76	-	-	-	-	-	Chrome	603	2057	300W	A, A+, D, E, F, G
600	1200	1150	73-83	96-108	7	5.92	15.93	-	-	-	-	-	Chrome	710	2423	300W	A, A+, D, E, F, G
800	1000	950	73-83	96-108	9	6.65	17.50	-	-	-	-	-	Chrome	779	2658	450W	A, A+, D, E, F, G
800	1200	1150	73-83	96-108	9	7.67	20.23	-	-	-	-	-	Chrome	916	3125	450W	A, A+, D, E, F, G
1200	400	350	63-73	96-108	12	5.01	11.95	Coloured	651	2221	300W	A, A+, D, E, F, G	Chrome	514	1754	300W	A, A+, D, E, F, G
1200	500	450	63-73	96-108	12	5.69	13.85	Coloured	766	2614	450W	A, A+, D, E, F, G	Chrome / Brushed Brass	606	2068	300W	A, A+, D, E, F, G
1200	600	550	63-73	96-108	12	6.38	15.75	Coloured	883	3013	450W	A, A+, D, E, F, G	Chrome / Brushed Brass	697	2378	300W	A, A+, D, E, F, G
1800	400	350	63-73	96-108	19	7.75	18.13	Coloured	1014	3460	600W	A, A+, D, E, F, G	Chrome	802	2736	450W	A, A+, D, E, F, G
1800	500	450	63-73	96-108	19	8.82	21.14	Coloured	1198	4088	600W	A, A+, D, E, F, G	Chrome	946	3228	450W	A, A+, D, E, F, G

STAVERTON TUBE ON TUBE CURVED - DESIGNER RANGE

Staverton Tube on Tube - Curved

Height H (mm)	Width W (mm)	Tappings C (mm)	Tappings from wall - A (mm)	Distance from wall - D (mm)	Tube Qty	Water Content L	Weight KG	Colour	▲T60 Watts	▲T60 BTU	Element Output	Element Type	Colour	▲T60 Watts	▲T60 BTU	Element Output	Element Type
600	500	450	63-73	128-143	9	3.17	7.95	-	-	-	-	-	Chrome	328	1119	150W	A, A+, D, E, F, G
600	600	550	63-73	128-143	9	3.57	8.98	-	-	-	-	-	Chrome	378	1290	150W	A, A+, D, E, F, G
1200	500	450	63-73	128-143	17	6.12	14.36	-	-	-	-	-	Chrome	628	2143	300W	A, A+, D, E, F, G
1200	600	550	63-73	128-143	17	6.87	16.30	-	-	-	-	-	Chrome	722	2463	450W	A, A+, D, E, F, G
1800	500	450	63-73	128-143	25	9.07	20.77	-	-	-	-	-	Chrome	928	3166	450W	A, A+, D, E, F, G
1800	600	550	63-73	128-143	25	10.17	23.63	-	-	-	-	-	Chrome	1067	3641	600W	A, A+, D, E, F, G

BIAVA CORINIUM - DESIGNER RANGE

Biava Corinium

Height H (mm)	Width W (mm)	Tappings C (mm)	Distance from wall - D (mm)	Tappings from wall - A (mm)	Tube Qty	Water Content L	Weight KG	Colour	▲T60 Watts	▲T60 BTU	Element Output	Element Type	Colour	▲T60 Watts	▲T60 BTU	Element Output	Element Type
1200	500	470	225	43-58	8	3.87	6.20	-	-	-	-	-	Chrome	304	1037	150W	A, A+, C, E
1200	600	570	225	43-58	8	4.13	6.55	-	-	-	-	-	Chrome	330	1126	150W	A, A+, C, E

DEFFORD - DESIGNER RANGE

Defford

Height H (mm)	Width W (mm)	Tappings C (mm)	Distance from wall - D (mm)	Tappings from wall - A (mm)	Tube Qty	Water Content L	Weight KG	Colour	▲T60 Watts	▲T60 BTU	Element Output	Element Type	Colour	▲T60 Watts	▲T60 BTU	Element Output	Element Type
800	500	455	95	80	10	2.80	7.20	Coloured	405	1382	150W	A, A+, D, E, F, G	Chrome	250	853	150W	A, A+, D, E, F, G
800	600	555	95	80	10	3.00	8.30	Coloured	467	1594	150W	A, A+, D, E, F, G	Chrome	286	976	150W	A, A+, D, E, F, G
1200	500	455	95	80	16	4.30	11.20	Coloured	603	2058	300W	A, A+, D, E, F, G	Chrome	371	1266	150W	A, A+, D, E, F, G
1200	600	555	95	80	16	4.70	12.70	Coloured	695	2372	300W	A, A+, D, E, F, G	Chrome	424	1447	150W	A, A+, D, E, F, G
1800	500	455	95	80	22	6.20	15.10	Coloured	892	3044	450W	A, A+, D, E, F, G	Chrome	555	1894	300W	A, A+, D, E, F, G
1800	600	555	95	80	22	6.70	17.40	Coloured	1029	3511	450W	A, A+, D, E, F, G	Chrome	636	2171	300W	A, A+, D, E, F, G



Staverton Tube on Tube Straight



Staverton Tube on Tube Curved



Biava Corinium



Defford

Technical Tables & Drawings

STAVERTON TUBE ON TUBE - STRAIGHT

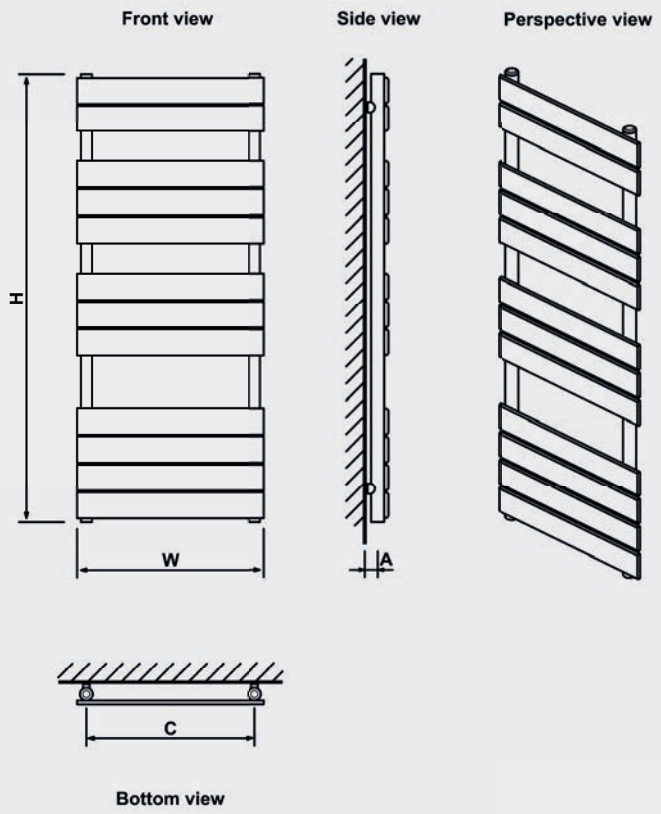

STAVERTON TUBE ON TUBE - CURVED

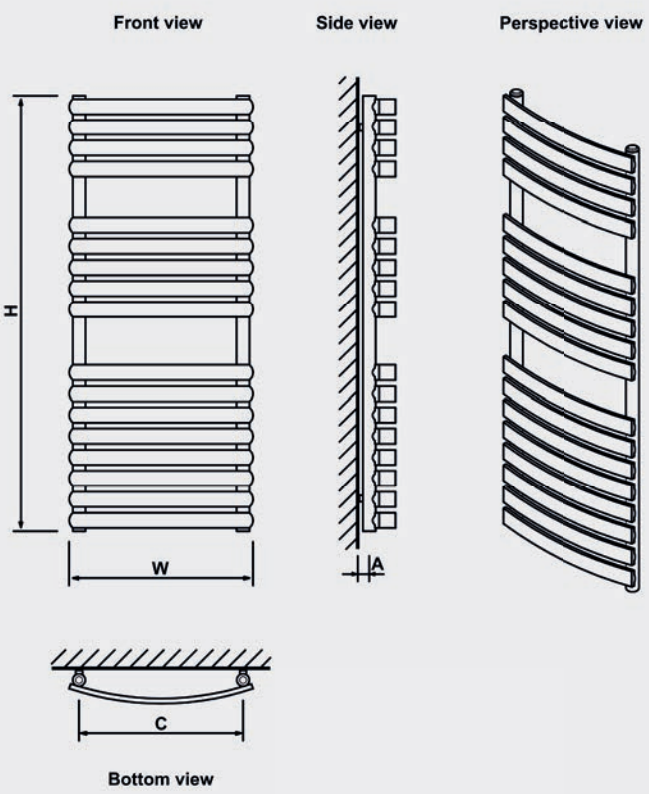

BIAVA CORINIUM

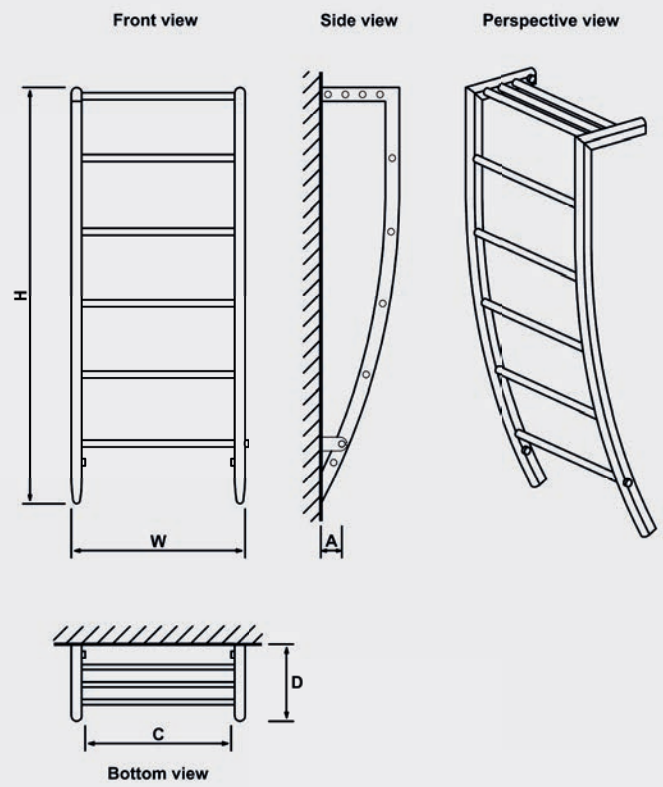

DEFFORD

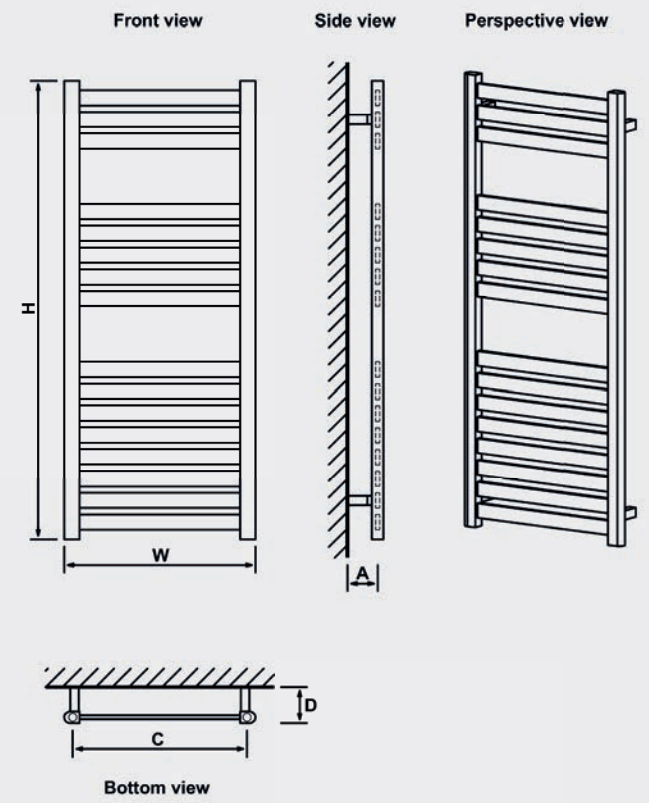

Technical Tables & Drawings

STAVERTON - DESIGNER RANGE

Staverton

Height H (mm)	Width W (mm)	Tappings C (mm)	Tappings from wall - A (mm)	Distance from wall - D (mm)	Tube Qty	Water Content L	Weight KG	Colour	▲T60 Watts	▲T60 BTU	Element Output	Element Type	Colour	▲T60 Watts	▲T60 BTU	Element Output	Element Type
600	400	350	66-81	80-100	8	2.23	9.02	Coloured	276	942	150W	A,A+,D,E,F,G	Chrome	217	740	100W	A,A+,D,E,F,G
600	500	450	66-81	80-100	8	2.58	5.94	Coloured	332	1133	150W	A,A+,D,E,F,G	Chrome	261	891	150W	A,A+,D,E,F,G
600	600	550	66-81	80-100	8	2.93	6.85	Coloured	388	1324	150W	A,A+,D,E,F,G	Chrome	305	1041	150W	A,A+,D,E,F,G
1200	400	350	66-81	80-100	16	4.45	9.61	Coloured	552	1883	300W	A,A+,D,E,F,G	Chrome	435	1484	150W	A,A+,D,E,F,G
1200	500	450	66-81	80-100	16	5.15	11.43	Coloured	665	2269	300W	A,A+,D,E,F,G	Chrome / Brushed Brass	523	1784	300W	A,A+,D,E,F,G
1200	600	550	66-81	80-100	16	5.85	13.26	Coloured	776	2648	450W	A,A+,D,E,F,G	Chrome / Brushed Brass	611	2085	300W	A,A+,D,E,F,G
1800	400	350	66-81	80-100	24	6.68	14.19	Coloured	829	2829	450W	A,A+,D,E,F,G	Chrome	652	2225	300W	A,A+,D,E,F,G
1800	500	450	66-81	80-100	24	7.73	16.93	Coloured	996	3398	600W	A,A+,D,E,F,G	Chrome	784	2675	450W	A,A+,D,E,F,G
1800	600	550	66-81	80-100	24	8.78	19.67	Coloured	1164	3972	600W	A,A+,D,E,F,G	Chrome	916	3125	450W	A,A+,D,E,F,G

MEZZO TONDO - DESIGNER RANGE

Mezzo Tondo

Height H (mm)	Width W (mm)	Tappings C (mm)	Tappings from wall - A (mm)	Distance from wall - D (mm)	Tube Qty	Water Content L	Weight KG	Colour	▲T60 Watts	▲T60 BTU	Element Output	Element Type	Colour	▲T60 Watts	▲T60 BTU	Element Output	Element Type
1600	320	286	63-73	247-257	26	5.11	10.03	-	-	-	-	-	Chrome	574	1958	N/A	N/A

PESARO - DESIGNER RANGE

Pesaro

Height H (mm)	Width W (mm)	Tappings C (mm)	Tappings from wall - A (mm)	Distance from wall - D (mm)	Tube Qty	Water Content L	Weight KG	Colour	▲T60 Watts	▲T60 BTU	Element Output	Element Type	Colour	▲T60 Watts	▲T60 BTU	Element Output	Element Type
1005	550	80	65-80	115-130	12	4.09	5.88	-	-	-	-	-	Chrome	349	1191	150W	A, A+, D, E

SANTERO - DESIGNER RANGE

Santero

Height H (mm)	Width W (mm)	Tappings C (mm)	Distance from wall - D (mm)	Tappings from wall - A (mm)	Tube Qty	Water Content L	Weight KG	Colour	▲T60 Watts	▲T60 BTU	Element Output	Element Type	Colour	▲T60 Watts	▲T60 BTU	Element Output	Element Type
800	500	455	95	80	7	3.90	9.10	Coloured	430	1468	150W	A, A+, D, E, F, G	Chrome	249	850	150W	A, A+, D, E, F, G
800	600	555	95	80	7	4.50	9.50	Coloured	509	1737	150W	A, A+, D, E, F, G	Chrome	289	987	150W	A, A+, D, E, F, G
1200	500	455	95	80	10	5.70	11.70	Coloured	633	2160	300W	A, A+, D, E, F, G	Chrome	373	1273	150W	A, A+, D, E, F, G
1200	600	555	95	80	10	6.50	14.00	Coloured	749	2556	300W	A, A+, D, E, F, G	Chrome	434	1481	150W	A, A+, D, E, F, G
1800	500	455	95	80	15	8.60	16.50	Coloured	932	3180	450W	A, A+, D, E, F, G	Chrome	551	1881	300W	A, A+, D, E, F, G
1800	600	555	95	80	15	9.80	19.70	Coloured	1104	3767	450W	A, A+, D, E, F, G	Chrome	641	2188	300W	A, A+, D, E, F, G



Staverton



Mezzo Tondo



Pesaro



Santero

Technical Tables & Drawings

STAVERTON

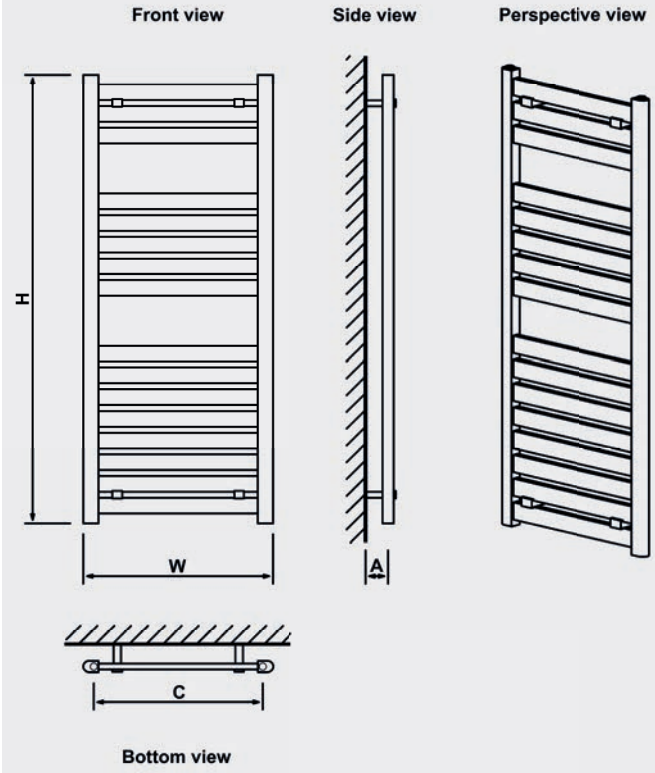

MEZZO TONDO

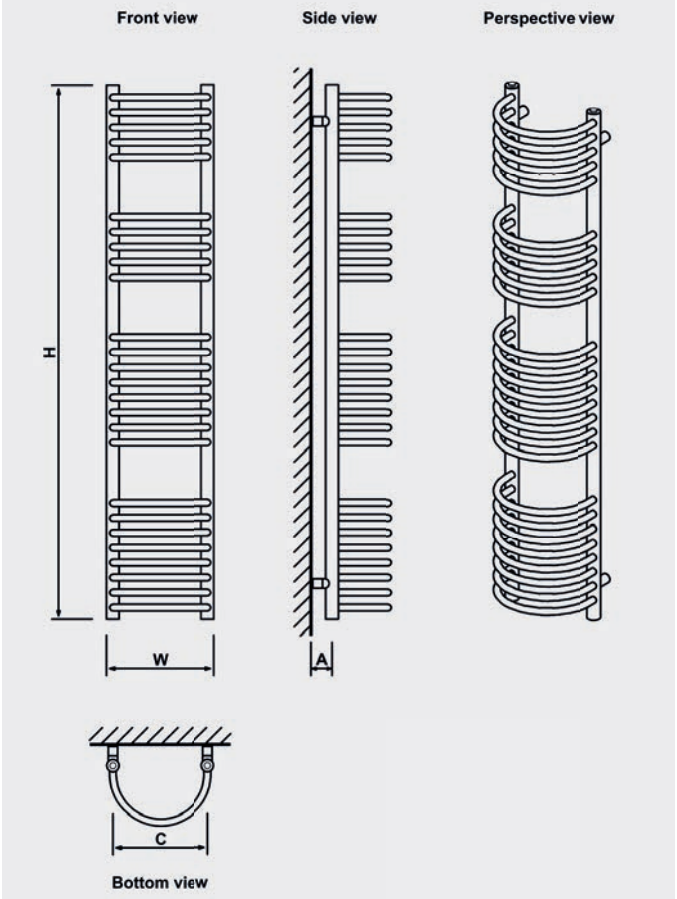

PESARO

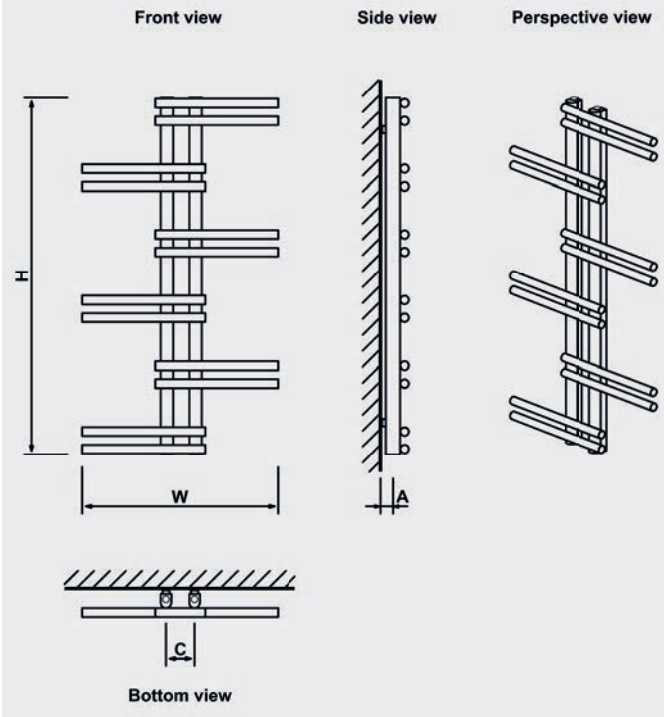

SANTERO

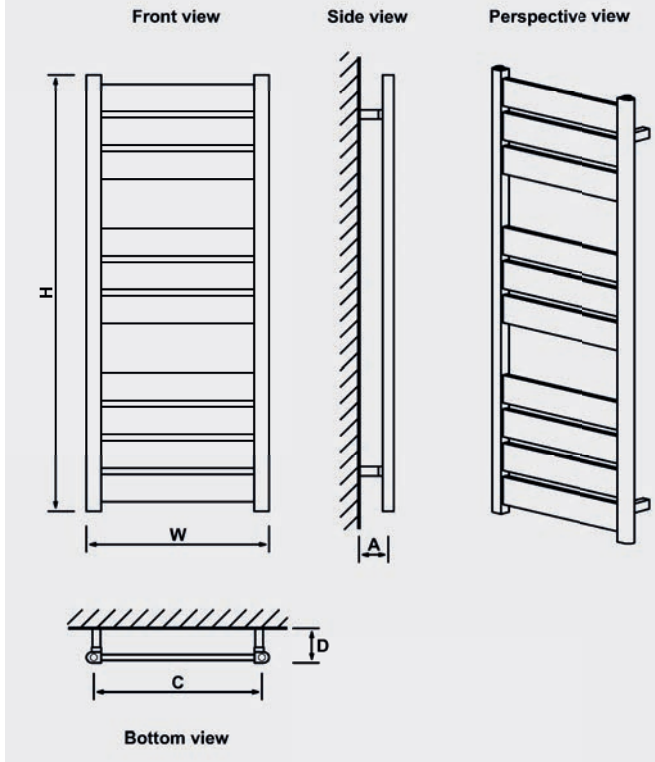

Technical Tables & Drawings

HURLEY - DESIGNER RANGE

Hurley

Height H (mm)	Width W (mm)	Tappings C (mm)	Distance from wall - D (mm)	Tappings from wall - A (mm)	Tube Qty	Water Content L	Weight KG	Colour	▲T60 Watts	▲T60 BTU	Element Output	Element Type	Colour	▲T60 Watts	▲T60 BTU	Element Output	Element Type
800	500	60	104	79	9	2.90	9.70	Coloured	368	1256	150W	A, A+, D, E, F, G	Chrome	239	816	150W	A, A+, D, E, F, G
800	600	60	104	79	9	3.60	11.20	Coloured	414	1413	150W	A, A+, D, E, F, G	Chrome	268	915	150W	A, A+, D, E, F, G
1000	500	60	104	79	12	3.01	11.50	Coloured	460	1570	150W	A, A+, D, E, F, G	Chrome	298	1017	150W	A, A+, D, E, F, G
1000	600	60	104	79	12	3.32	12.80	Coloured	517	1765	300W	A, A+, D, E, F, G	Chrome	334	1140	150W	A, A+, D, E, F, G
1200	500	60	104	79	15	4.30	14.50	Coloured	551	1881	300W	A, A+, D, E, F, G	Chrome	356	1215	150W	A, A+, D, E, F, G
1200	600	60	104	79	15	5.70	16.00	Coloured	619	2113	300W	A, A+, D, E, F, G	Chrome	399	1362	150W	A, A+, D, E, F, G
1500	500	60	104	79	18	4.52	16.70	Coloured	684	2334	300W	A, A+, D, E, F, G	Chrome	441	1505	150W	A, A+, D, E, F, G
1500	600	60	104	79	18	4.98	18.60	Coloured	768	2621	450W	A, A+, D, E, F, G	Chrome	494	1686	300W	A, A+, D, E, F, G
1800	500	60	104	79	21	6.80	18.50	Coloured	813	2774	450W	A, A+, D, E, F, G	Chrome	522	1782	300W	A, A+, D, E, F, G
1800	600	60	104	79	21	7.50	20.00	Coloured	913	3116	450W	A, A+, D, E, F, G	Chrome	585	1997	300W	A, A+, D, E, F, G

HELMSLEY - DESIGNER RANGE

Helmsley

Height H (mm)	Width W (mm)	Tappings C (mm)	Distance from wall - D (mm)	Tappings from wall - A (mm)	Tube Qty	Water Content L	Weight KG	Colour	▲T60 Watts	▲T60 BTU	Element Output	Element Type	Colour	▲T60 Watts	▲T60 BTU	Element Output	Element Type
800	500	50	106	79	9	3.51	10.3	Coloured	437	1492	300W	A, A+, D, E, F, G	-	-	-	-	-
800	600	50	106	79	9	3.98	14.5	Coloured	506	1727	300W	A, A+, D, E, F, G	-	-	-	-	-
1150	500	50	106	79	12	4.81	16.9	Coloured	607	2072	300W	A, A+, D, E, F, G	-	-	-	-	-
1150	600	50	106	79	12	5.43	19.2	Coloured	703	2399	450W	A, A+, D, E, F, G	-	-	-	-	-
1400	500	50	106	79	15	5.95	20.6	Coloured	736	2512	450W	A, A+, D, E, F, G	-	-	-	-	-
1400	600	50	106	79	15	6.74	23.3	Coloured	853	2911	600W	A, A+, D, E, F, G	-	-	-	-	-
1640	500	50	106	79	18	7.09	24.1	Coloured	869	2966	600W	A, A+, D, E, F, G	-	-	-	-	-
1640	600	50	106	79	18	8.03	28.1	Coloured	1007	3436	600W	A, A+, D, E, F, G	-	-	-	-	-

PLATANI - DESIGNER RANGE

Platani

Height H (mm)	Width W (mm)	Tappings C (mm)	Distance from wall - D (mm)	Tappings from wall - A (mm)	Tube Qty	Water Content L	Weight KG	Colour	▲T60 Watts	▲T60 BTU	Element Output	Element Type	Colour	▲T60 Watts	▲T60 BTU	Element Output	Element Type
800	500	50	115	80	6	3.10	5.60	Coloured	339	1157	150W	A, A+, D, E, F, G	Chrome	216	737	100W	A, A+, D, E, F, G
800	600	50	115	80	6	3.40	7.90	Coloured	389	1328	150W	A, A+, D, E, F, G	Chrome	247	843	100W	A, A+, D, E, F, G
1150	500	50	115	80	8	4.20	9.40	Coloured	467	1594	150W	A, A+, D, E, F, G	Chrome	299	1021	150W	A, A+, D, E, F, G
1150	600	50	115	80	8	4.70	10.60	Coloured	535	1826	150W	A, A+, D, E, F, G	Chrome	342	1167	150W	A, A+, D, E, F, G
1800	500	50	115	80	12	6.40	14.60	Coloured	703	2399	300W	A, A+, D, E, F, G	Chrome	455	1553	150W	A, A+, D, E, F, G
1800	600	50	115	80	12	7.20	15.60	Coloured	806	2751	300W	A, A+, D, E, F, G	Chrome	520	1775	150W	A, A+, D, E, F, G

REINBACH - DESIGNER RANGE

Reinbach

Height H (mm)	Width W (mm)	Tappings C (mm)	Distance from wall - D (mm)	Tappings from wall - A (mm)	Tube Qty	Water Content L	Weight KG	Colour	▲T60 Watts	▲T60 BTU	Element Output	Element Type	Colour	▲T60 Watts	▲T60 BTU	Element Output	Element Type
800	500	50	125	80	12	5.50	10,4	Coloured	466	1590	150W	A, A+, D, E, F, G	-	-	-	-	-
800	600	50	125	80	12	6.40	11,9	Coloured	556	1898	300W	A, A+, D, E, F, G	-	-	-	-	-
1200	500	50	125	80	16	7.60	13,6	Coloured	671	2290	300W	A, A+, D, E, F, G	-	-	-	-	-
1200	600	50	125	80	16	8.70	15,6	Coloured	802	2737	300W	A, A+, D, E, F, G	-	-	-	-	-
1800	500	50	125	80	24	11.40	21,1	Coloured	976	3331	450W	A, A+, D, E, F, G	-	-	-	-	-
1800	600	50	125	80	24	13.10	23,7	Coloured	1166	3979	600W	A, A+, D, E, F, G	-	-	-	-	-



Hurley



Helmsley



Platani



Reinbach

Technical Tables & Drawings

HURLEY

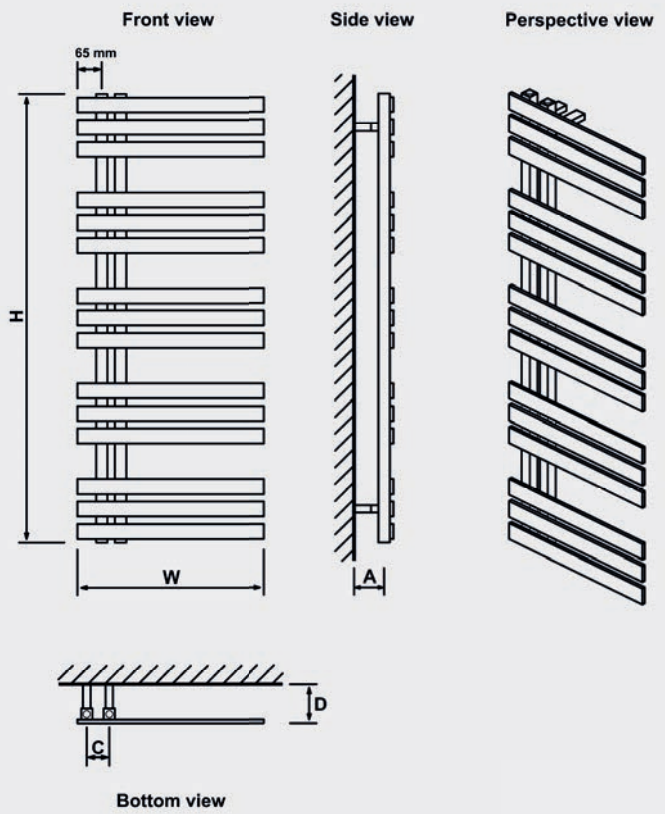

HELMSLEY

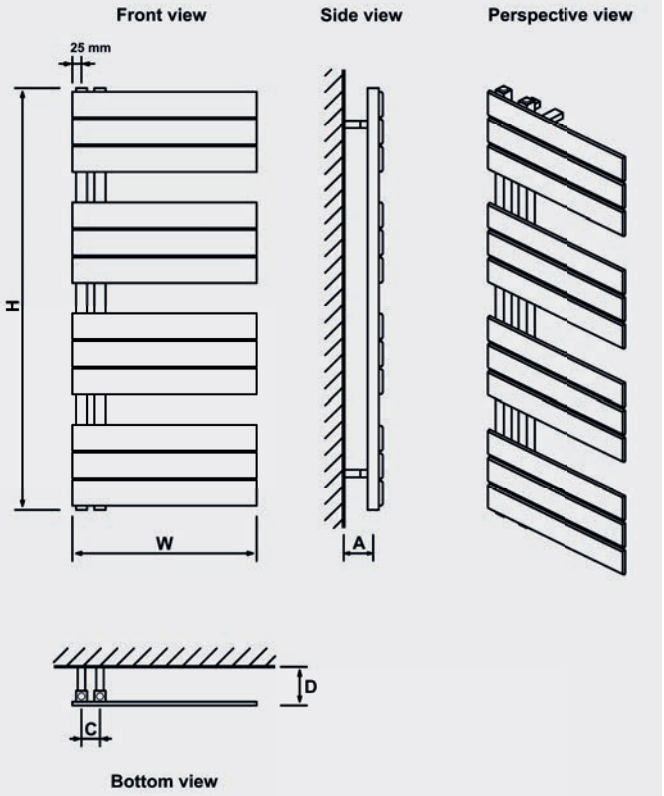

PLATANI

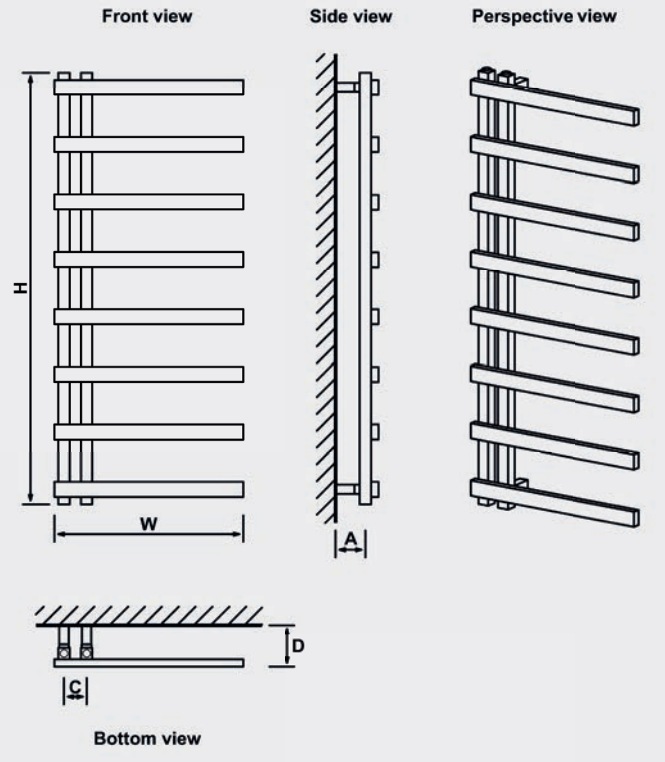

REINBACH

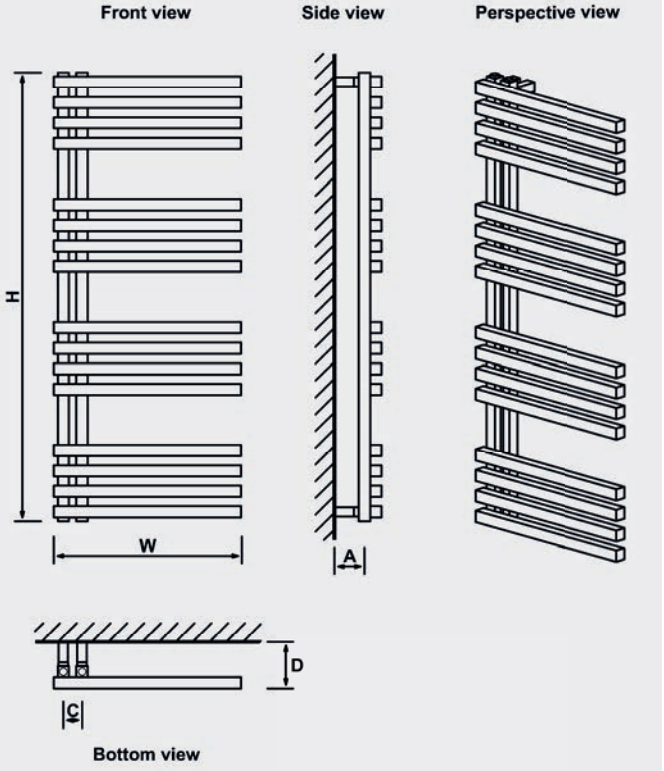

Technical Tables & Drawings

MARLOW - DESIGNER RANGE

Marlow

Height H (mm)	Width W (mm)	Tappings C (mm)	Distance from wall - D (mm)	Tappings from wall - A (mm)	Tube Qty	Water Content L	Weight KG	Colour	▲T60 Watts	▲T60 BTU	Element Output	Element Type	Colour	▲T60 Watts	▲T60 BTU	Element Output	Element Type
850	500	418	127	85	6	4.90	8.50	Coloured	399	1362	N/A	N/A	Chrome	257	877	N/A	N/A
850	600	518	127	85	6	5.60	10.00	Coloured	452	1543	N/A	N/A	Chrome	293	1000	N/A	N/A
1150	500	418	127	85	8	6.60	11.00	Coloured	534	1823	N/A	N/A	Chrome	344	1174	N/A	N/A
1150	600	518	127	85	8	7.50	13.00	Coloured	606	2068	N/A	N/A	Chrome	392	1338	N/A	N/A
1750	500	418	127	85	12	10.00	16.50	Coloured	804	2744	N/A	N/A	Chrome	520	1775	N/A	N/A
1750	600	518	127	85	12	11.30	18.50	Coloured	912	3112	N/A	N/A	Chrome	594	2027	N/A	N/A

MARLOW E-STYLE - DESIGNER RANGE

Marlow E-Style

Height H (mm)	Width W (mm)	Tappings C (mm)	Distance from wall - D (mm)	Tappings from wall - A (mm)	Tube Qty	Water Content L	Weight KG	Colour	▲T60 Watts	▲T60 BTU	Element Output	Element Type	Colour	▲T60 Watts	▲T60 BTU	Element Output	Element Type
850	500	50	127	85	6	4.90	8.50	Coloured	371	1266	N/A	N/A	Chrome	242	826	N/A	N/A
850	600	50	127	85	6	5.60	10.00	Coloured	422	1440	N/A	N/A	Chrome	274	935	N/A	N/A
1150	500	50	127	85	8	6.60	11.00	Coloured	497	1696	N/A	N/A	Chrome	325	1109	N/A	N/A
1150	600	50	127	85	8	7.50	13.00	Coloured	566	1932	N/A	N/A	Chrome	368	1256	N/A	N/A
1750	500	50	127	85	12	10.00	16.50	Coloured	756	2580	N/A	N/A	Chrome	491	1676	N/A	N/A
1750	600	50	127	85	12	11.30	18.50	Coloured	861	2938	N/A	N/A	Chrome	555	1894	N/A	N/A

LAMBOURNE VERTICAL - DESIGNER RANGE

Lambourne Vertical

Height H (mm)	Width W (mm)	Tappings C1* - C2** (mm)	Distance from wall - D (mm)	Tappings from wall - A1*-A2**(mm)	Tube Qty	Water Content L	Weight KG	Colour	▲T60 Watts	▲T60 BTU	Element Output	Element Type	Colour	▲T60 Watts	▲T60 BTU	Element Output	Element Type
1200	420	420 / 240	127	85 / 106	7	9.36	13.82	Coloured	649	2215	150W	A, A+, D, E, F, G	Chrome	426	1454	150W	A, A+, D, E, F, G
1200	540	540 / 360	127	85 / 106	9	12.04	17.31	Coloured	837	2856	300W	A, A+, D, E, F, G	Chrome	549	1874	150W	A, A+, D, E, F, G
1800	420	420 / 240	127	85 / 106	7	14.38	20.32	Coloured	888	3030	300W	A, A+, D, E, F, G	Chrome	652	2225	150W	A, A+, D, E, F, G
1800	540	540 / 360	127	85 / 106	9	18.48	25.60	Coloured	1146	3911	450W	A, A+, D, E, F, G	Chrome	842	2873	300W	A, A+, D, E, F, G

* Tappings C1/A1 : Tappings for side installation ** Tappings C2/A2 : Tappings for bottom installation

MURANO VERTICAL - DESIGNER RANGE

Murano - Vertical

Height H (mm)	Width W (mm)	Tappings C (mm)	Distance from wall - D (mm)	Tappings from wall - A (mm)	Tube Qty	Water Content L	Weight KG	Colour	▲T60 Watts	▲T60 BTU	Element Output	Element Type	Colour	▲T60 Watts	▲T60 BTU	Element Output	Element Type
1800	310	310	86	50	12	6.90	13.80	Coloured	947	3232	N/A	N/A	-	-	-	-	-
1800	410	410	86	50	16	9.20	18.40	Coloured	1301	4440	N/A	N/A	-	-	-	-	-
1800	510	510	86	50	20	11.50	23.40	Coloured	1667	5688	N/A	N/A	-	-	-	-	-



Marlow



Marlow E-Style



Lambourne Vertical



Murano Vertical

Technical Tables & Drawings

MARLOW

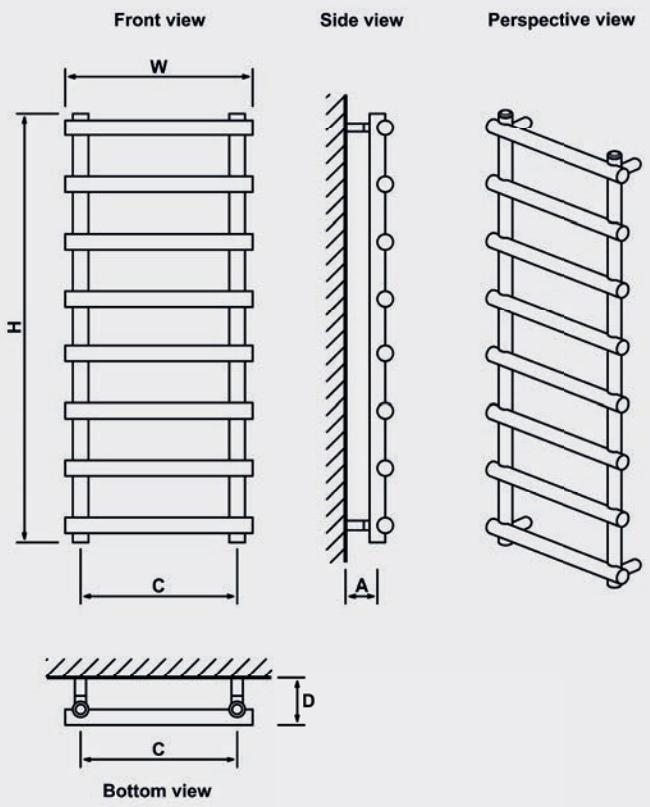

MARLOW E-STYLE

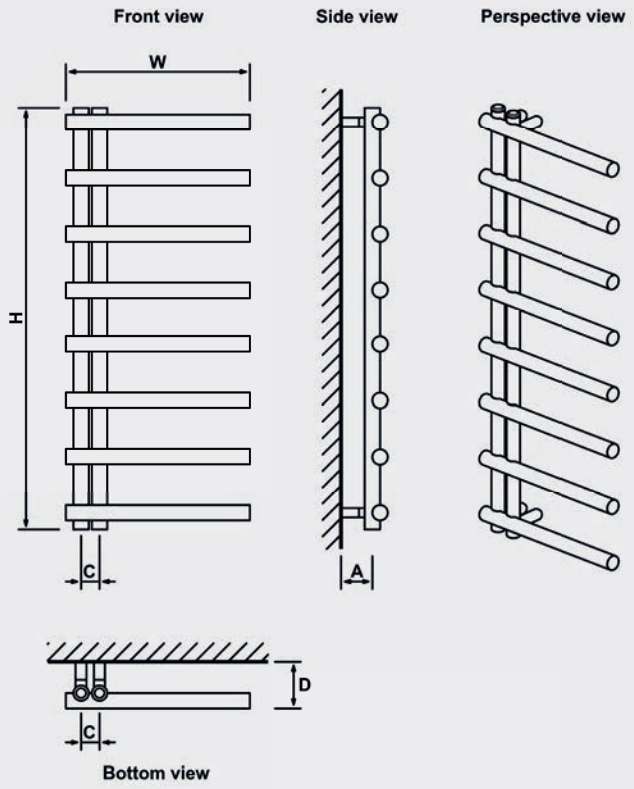

LAMBOURNE - VERTICAL

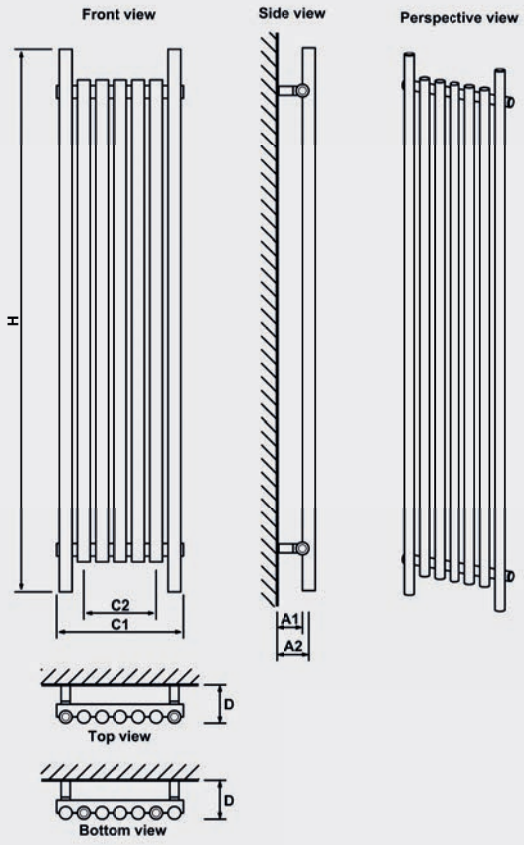

MURANO - VERTICAL

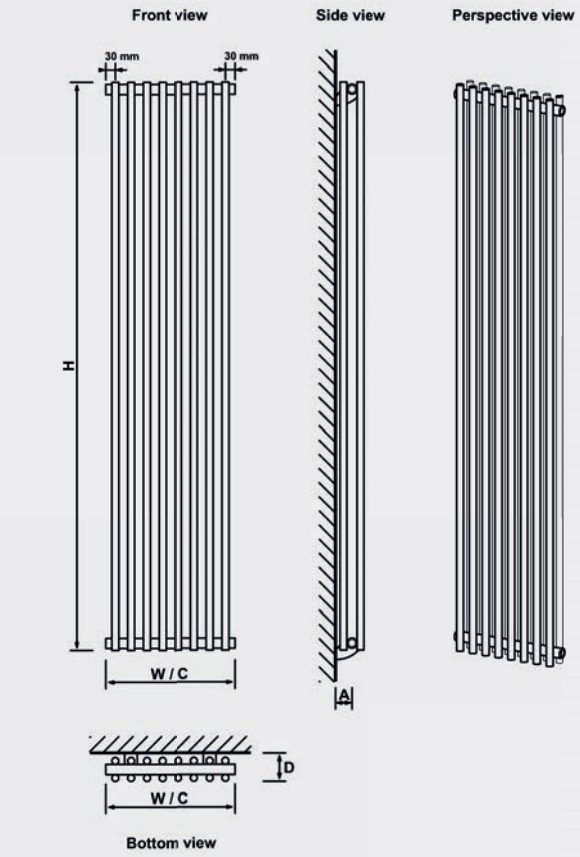

Technical Tables & Drawings

MURANO HORIZONTAL - DESIGNER RANGE

Murano - Horizontal

Height H (mm)	Width W (mm)	Tappings C (mm)	Distance from wall - D (mm)	Tappings from wall - A (mm)	Tube Qty	Water Content L	Weight KG	Colour	▲T60 Watts	▲T60 BTU	Element Output	Element Type	Colour	▲T60 Watts	▲T60 BTU	Element Output	Element Type
600	800	755	117	81	20	5.60	10.80	Coloured	864	2948	300W	A, A+, D, F, G	-	-	-	-	-
600	1000	955	117	81	20	6.80	13.50	Coloured	1103	3764	450W	A, A+, D, F, G	-	-	-	-	-
600	1200	1155	117	81	20	8.00	15.90	Coloured	1348	4600	450W	A, A+, D, F, G	-	-	-	-	-
600	1400	1355	117	81	20	9.20	18.10	Coloured	1596	5446	600W	A+, D, F, G	-	-	-	-	-

RYTON - DESIGNER RANGE

Ryton

Height H (mm)	Width W (mm)	Tappings C (mm)	Distance from wall - D (mm)	Tappings from wall - A (mm)	Tube Qty	Water Content L	Weight KG	Colour	▲T60 Watts	▲T60 BTU	Element Output	Element Type	Colour	▲T60 Watts	▲T60 BTU	Element Output	Element Type
800	500	470	95-110	75-90	6	3.30	4.84	Coloured	253	863	150W	A, A+, D, E, F, G	Chrome	168	572	100W	A, A+, D, E, F, G
800	600	570	95-110	75-90	6	3.70	5.70	Coloured	279	951	150W	A, A+, D, E, F, G	Chrome	185	630	100W	A, A+, D, E, F, G
1200	500	470	95-110	75-90	9	4.50	6.70	Coloured	379	1293	150W	A, A+, D, E, F, G	Chrome	251	856	150W	A, A+, D, E, F, G
1200	600	570	95-110	75-90	9	5.00	7.80	Coloured	418	1425	150W	A, A+, D, E, F, G	Chrome	277	944	150W	A, A+, D, E, F, G
1600	500	470	95-110	75-90	12	5.75	8.60	Coloured	505	1722	300W	A, A+, D, E, F, G	Chrome	334	1141	150W	A, A+, D, E, F, G
1600	600	570	95-110	75-90	12	6.30	9.90	Coloured	556	1898	300W	A, A+, D, E, F, G	Chrome	368	1257	150W	A, A+, D, E, F, G

KENILWORTH - DESIGNER RANGE

Kenilworth

Height H (mm)	Width W (mm)	Tappings C (mm)	Distance from wall - D (mm)	Tappings from wall - A (mm)	Tube Qty	Water Content L	Weight KG	Colour	▲T60 Watts	▲T60 BTU	Element Output	Element Type	Colour	▲T60 Watts	▲T60 BTU	Element Output	Element Type
800	500	468	92-107	76-91	6	2.50	4.06	Coloured	252	860	150W	A, A+, D, E, F, G	Chrome	167	570	100W	A, A+, D, E, F, G
800	600	568	92-107	76-91	6	2.80	5.30	Coloured	280	956	150W	A, A+, D, E, F, G	Chrome	186	633	100W	A, A+, D, E, F, G
1200	500	468	92-107	75-91	9	3.40	5.60	Coloured	378	1289	150W	A, A+, D, E, F, G	Chrome	250	854	150W	A, A+, D, E, F, G
1200	600	568	92-107	76-91	9	3.85	6.80	Coloured	420	1432	150W	A, A+, D, E, F, G	Chrome	278	948	150W	A, A+, D, E, F, G
1600	500	468	92-107	76-91	12	4.40	7.05	Coloured	503	1717	300W	A, A+, D, E, F, G	Chrome	333	1137	150W	A, A+, D, E, F, G
1600	600	568	92-107	76-91	12	4.90	8.45	Coloured	559	1908	300W	A, A+, D, E, F, G	Chrome	370	1264	150W	A, A+, D, E, F, G

LOXLEY - DESIGNER RANGE

Loxley

Height H (mm)	Width W (mm)	Tappings C (mm)	Distance from wall - D (mm)	Tappings from wall - A (mm)	Tube Qty	Water Content L	Weight KG	Colour	▲T60 Watts	▲T60 BTU	Element Output	Element Type	Colour	▲T60 Watts	▲T60 BTU	Element Output	Element Type
800	500	441	93	76	6	2.10	3.50	Coloured	194	663	100W	A, A+, D, F, G	Chrome	129	439	N/A	N/A
800	600	541	93	76	6	2.28	5.25	Coloured	216	736	100W	A, A+, D, F, G	Chrome	143	487	N/A	N/A
1200	500	441	93	76	9	3.06	6.00	Coloured	291	993	150W	A, A+, D, E, F, G	Chrome	193	658	100W	A, A+, D, F, G
1200	600	541	93	76	9	3.33	7.30	Coloured	323	1102	150W	A, A+, D, E, F, G	Chrome	214	730	100W	A, A+, D, F, G



Murano Horizontal



Ryton



Kenilworth



Loxley

Technical Tables & Drawings

MURANO - HORIZONTAL

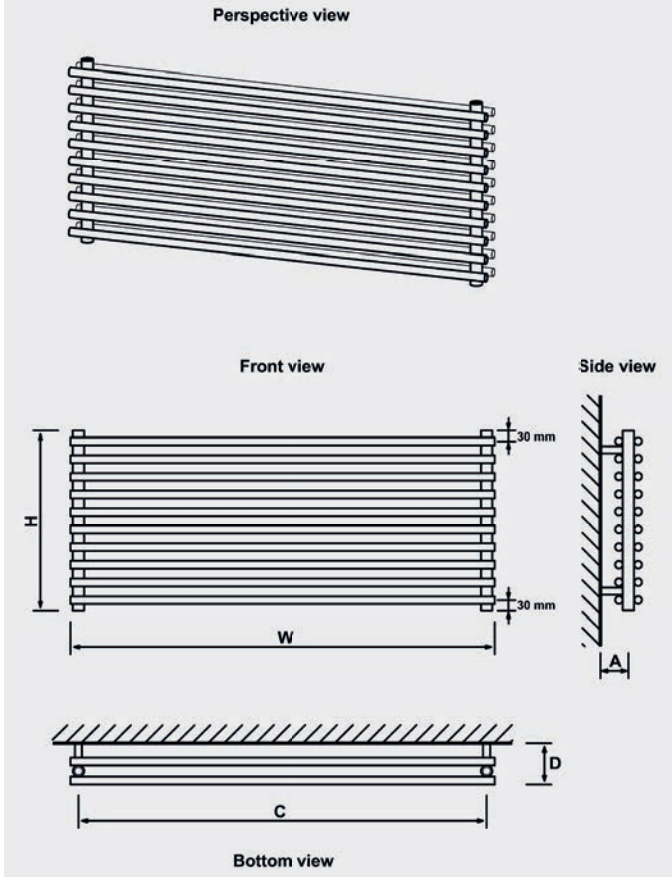

RYTON

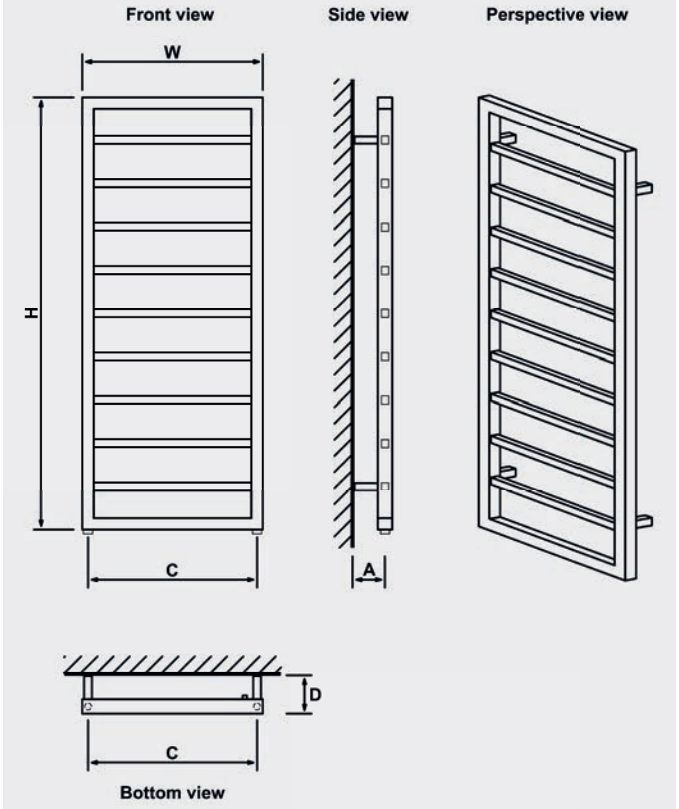

KENILWORTH

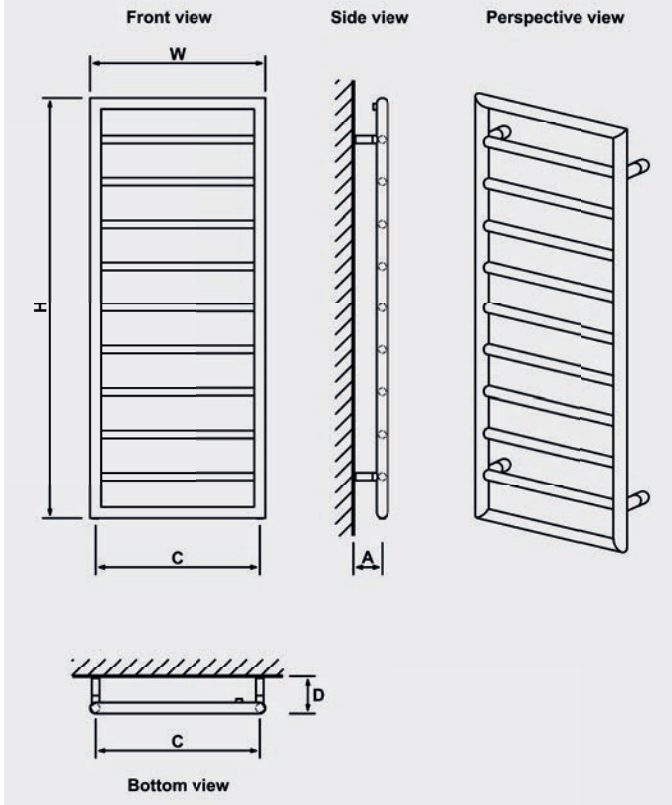

LOXLEY

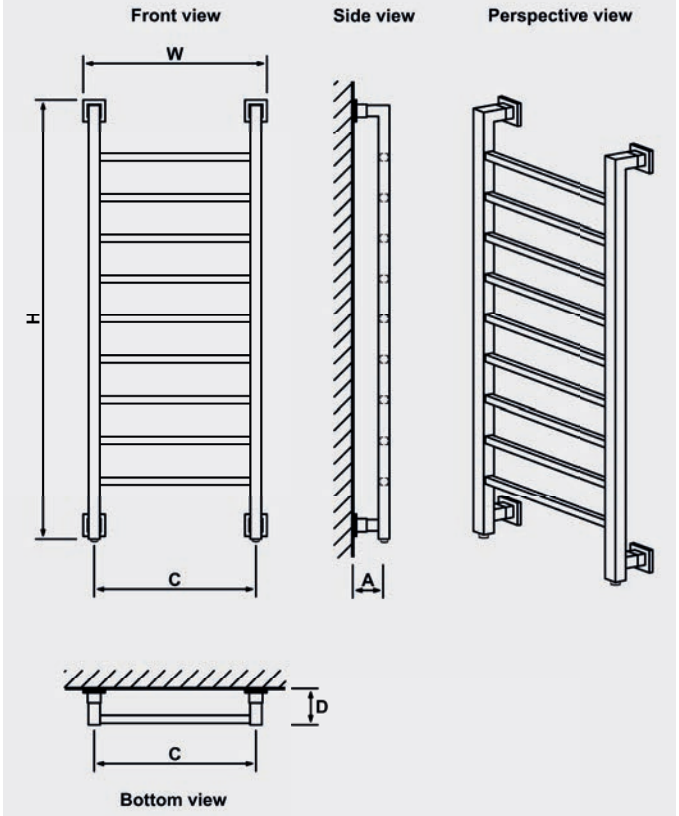

Technical Tables & Drawings

ESHTON - DESIGNER RANGE

Eshton

Height H (mm)	Width W (mm)	Tappings C (mm)	Distance from wall - D (mm)	Tappings from wall - A (mm)	Tube Qty	Water Content L	Weight KG	Colour	▲T60 Watts	▲T60 BTU	Element Output	Element Type	Colour	▲T60 Watts	▲T60 BTU	Element Output	Element Type
800	500	441	93	77	6	2.55	4.00	Coloured	248	848	150W	A, A+, D, E, F, G	Chrome	165	561	100W	A, A+, D, F, G
800	600	541	93	77	6	3.11	4.17	Coloured	276	942	150W	A, A+, D, E, F, G	Chrome	183	624	100W	A, A+, D, F, G
1200	500	441	93	77	9	3.45	5.40	Coloured	372	1270	150W	A, A+, D, E, F, G	Chrome	246	841	150W	A, A+, D, E, F, G
1200	600	541	93	77	9	3.72	5.80	Coloured	413	1411	150W	A, A+, D, E, F, G	Chrome	274	934	150W	A, A+, D, E, F, G

RUBANO - VERTICAL - DESIGNER RANGE

Rubano - Vertical

Height H (mm)	Width W (mm)	Tappings C (mm)	Distance from wall - D (mm)	Tappings from wall - A (mm)	Tube Qty	Water Content L	Weight KG	Colour	▲T60 Watts	▲T60 BTU	Element Output	Element Type
1800	383	383	114	74	6	18.10	35.70	Coloured	1658	5654	300W	A, A+, C*, H*
1800	503	503	114	74	8	24.10	47.20	Coloured	2210	7536	600W	A+, C**, H**

* Element Type C and H 300W can be used ** Element Type C and H 900w can be used

RUBANO - HORIZONTAL - DESIGNER RANGE

Rubano - Horizontal

Height H (mm)	Width W (mm)	Tappings C (mm)	Distance from wall - D (mm)	Tappings from wall - A (mm)	Tube Qty	Water Content L	Weight KG	Colour	▲T60 Watts	▲T60 BTU	Element Output	Element Type
600	383	383	114	74	6	7.10	11.20	Coloured	553	1886	300W	A, A+, C*, H*
600	623	623	114	74	10	11.70	18.10	Coloured	921	3141	450W	A, A+, C, E**, H
600	803	803	114	74	13	15.20	23.50	Coloured	1197	4082	600W	A, A+, C, E, H
600	1103	1103	114	74	18	21.10	33.30	Coloured	1658	5654	900W	A, A+, C, H

* Element Type C and H only 300W can be used ** Element Type E only 300E can be used

ROWSHAM - DESIGNER RANGE

Rowsham - Horizontal

Height H (mm)	Width W (mm)	Tappings C (mm)	Distance from wall - D (mm)	Tappings from wall - A (mm)	Tube Qty	Water Content L	Weight KG	Colour	▲T60 Watts	▲T60 BTU	Element Output	Element Type	Colour	▲T60 Watts	▲T60 BTU	Element Output	Element Type
600	580	580	110	54	15	7.03	12.0	Coloured	636	2171	N/A	N/A	-	-	-	-	-
600	780	780	110	54	20	9.39	15.0	Coloured	884	3017	N/A	N/A	-	-	-	-	-
600	980	980	110	54	25	11.74	19.0	Coloured	1140	3890	N/A	N/A	-	-	-	-	-
600	1180	1180	110	54	30	14.09	23.0	Coloured	1401	4781	N/A	N/A	-	-	-	-	-

Rowsham - Vertical

Height H (mm)	Width W (mm)	Tappings C (mm)	Distance from wall - D (mm)	Tappings from wall - A (mm)	Tube Qty	Water Content L	Weight KG	Colour	▲T60 Watts	▲T60 BTU	Element Output	Element Type	Colour	▲T60 Watts	▲T60 BTU	Element Output	Element Type
1800	300	300	110	54	8	10.30	16.0	Coloured	1045	3566	N/A	N/A	-	-	-	-	-
1800	380	380	110	54	10	12.89	19.0	Coloured	1360	4641	N/A	N/A	-	-	-	-	-
1800	500	500	110	54	13	16.76	25.0	Coloured	1846	6299	N/A	N/A	-	-	-	-	-



Eshton



Rubano Vertical



Rubano Horizontal



Rowsham Horizontal



Rowsham Vertical

Technical Tables & Drawings

ESHTON

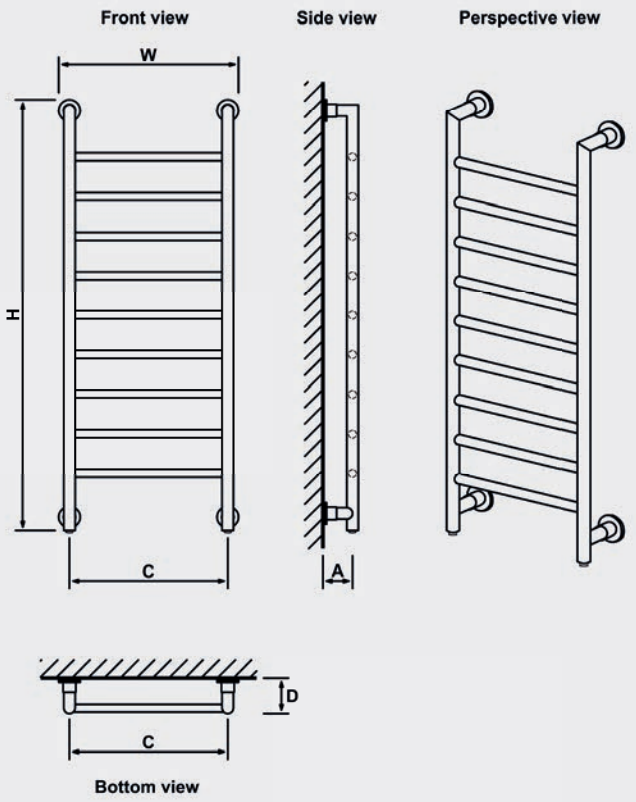

RUBANO - VERTICAL

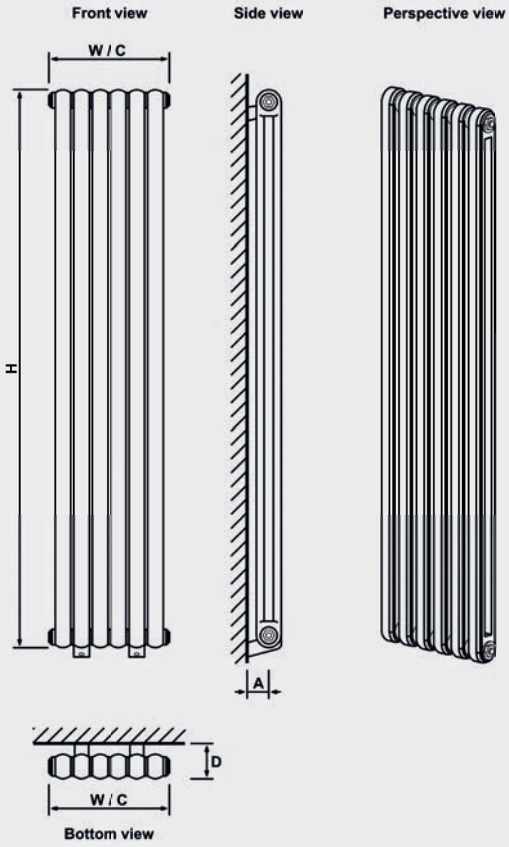

RUBANO - HORIZONTAL

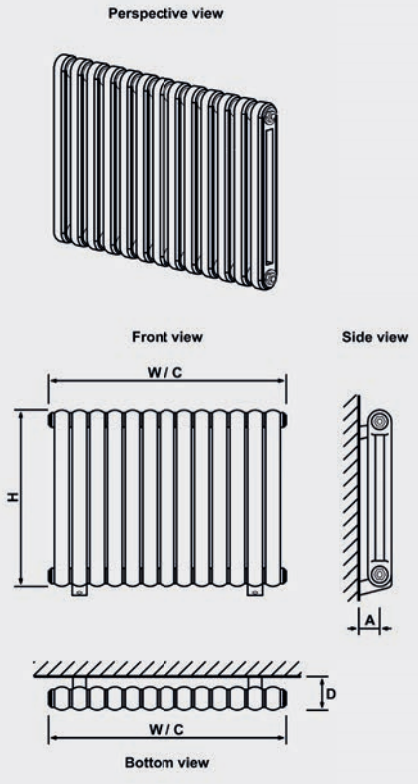

ROWSHAM - HORIZONTAL

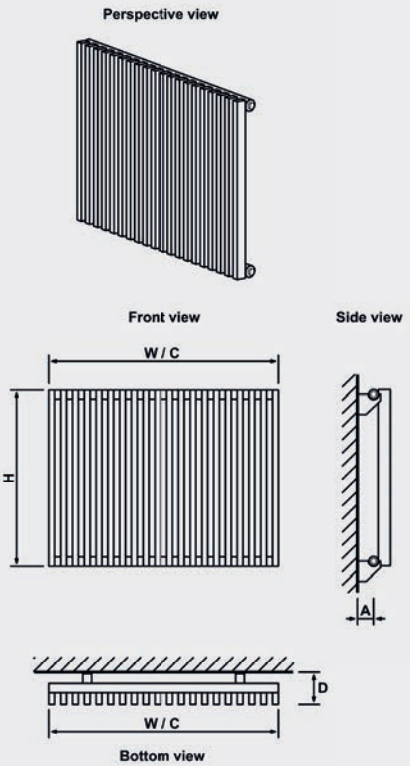

ROWSHAM - VERTICAL

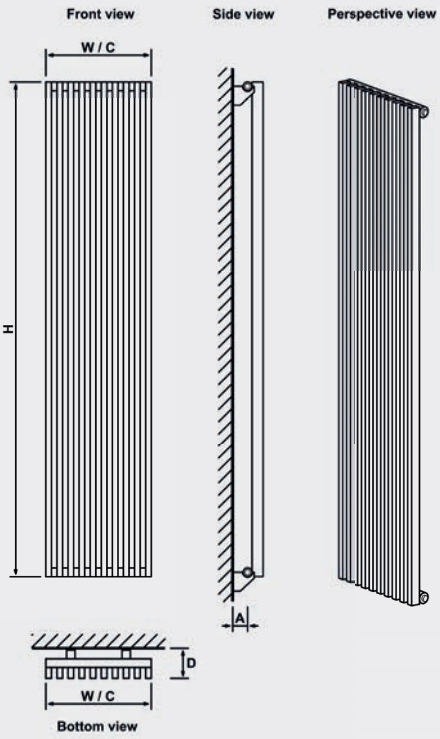

Technical Tables & Drawings

ROWSHAM TOWEL RAIL - DESIGNER RANGE

Rowsham Towel Rail

Height H (mm)	Width W (mm)	Tappings C (mm)	Distance from wall - D (mm)	Tappings from wall - A (mm)	Tube Qty	Water Content L	Weight KG	Colour	▲T60 Watts	▲T60 BTU	Element Output	Element Type	Colour	▲T60 Watts	▲T60 BTU	Element Output	Element Type
800	500	468	139	83	13	5.50	8.50	Coloured	581	1983	300W	A, A+, D, E, F, G	-	-	-	-	-
800	600	568	139	83	13	6.40	9.60	Coloured	627	2140	300W	A, A+, D, E, F, G	-	-	-	-	-
1200	500	468	139	83	22	9.10	14.00	Coloured	869	2966	450W	A, A+, D, E, F, G	-	-	-	-	-
1200	600	568	139	83	22	10.60	15.50	Coloured	938	3201	600W	A, A+, D, E, F, G	-	-	-	-	-
1800	500	468	139	83	30	12.60	19.40	Coloured	1331	4542	600W	A, A+, D, E, F, G	-	-	-	-	-
1800	600	568	139	83	30	14.70	21.60	Coloured	1437	4904	750W	A, A+, D, E, F, G	-	-	-	-	-

TUNSTALL - DESIGNER RANGE

Tunstall - Vertical

Height H (mm)	Width W (mm)	Tappings C (mm)	Distance from wall - D (mm)	Tappings from wall - A (mm)	Tube Qty	Water Content L	Weight KG	Colour	▲T60 Watts	▲T60 BTU	Element Output	Element Type	Colour	▲T60 Watts	▲T60 BTU	Element Output	Element Type
1800	280	280	93	52	4	6.08	10.7	Coloured	583	1990	N/A	N/A	Chrome	320	1092	N/A	N/A
1800	350	350	93	52	5	8.07	12.72	Coloured	750	2559	N/A	N/A	Chrome	423	1444	N/A	N/A
1800	420	420	93	52	6	9.14	15.4	Coloured	926	3160	N/A	N/A	Chrome	533	1819	N/A	N/A
1800	490	490	93	52	7	11.29	17.30	Coloured	1099	3750	N/A	N/A	Chrome	644	2198	N/A	N/A
1800	560	560	93	52	8	12.91	19.50	Coloured	1280	4368	N/A	N/A	Chrome	760	2594	N/A	N/A
1800	630	630	93	52	9	13.73	22.5	Coloured	1471	5020	N/A	N/A	Chrome	890	3037	N/A	N/A

Tunstall - Horizontal

Height H (mm)	Width W (mm)	Tappings C (mm)	Distance from wall - D (mm)	Tappings from wall - A (mm)	Tube Qty	Water Content L	Weight KG	Colour	▲T60 Watts	▲T60 BTU	Element Output	Element Type	Colour	▲T60 Watts	▲T60 BTU	Element Output	Element Type
600	471	471	93	52	8	4.68	8.10	Coloured	399	1362	N/A	N/A					
600	589	589	93	52	10	5.37	10.3	Coloured	509	1737	N/A	N/A	-	-	-	-	-
600	648	648	93	52	11	6.43	10.80	Coloured	565	1928	N/A	N/A					
600	825	825	93	52	14	7.53	13.8	Coloured	742	2532	N/A	N/A	-	-	-	-	-
600	1002	1002	93	52	17	9.15	16.5	Coloured	928	3167	N/A	N/A	-	-	-	-	-
600	1061	1061	93	52	18	10.53	16.93	Coloured	1003	3423	N/A	N/A					
600	1179	1179	93	52	20	10.77	19.2	Coloured	1123	3832	N/A	N/A	-	-	-	-	-

Tunstall Towel Rail

Height H (mm)	Width W (mm)	Tappings C (mm)	Distance from wall - D (mm)	Tappings from wall - A (mm)	Tube Qty	Water Content L	Weight KG	Colour	▲T60 Watts	▲T60 BTU	Element Output	Element Type	Colour	▲T60 Watts	▲T60 BTU	Element Output	Element Type
560	1000	954	124	83	8	4.72	12.3	Coloured	690	2355	300W	A, A+, D, E, F, G	Chrome	431	1471	150W	A, A+, D, E, F, G
800	500	454	124	83	9	4.45	8.9	Coloured	454	1550	150W	A, A+, D, E, F, G	Chrome	284	970	150W	A, A+, D, E, F, G
800	600	554	124	83	9	5.18	10.1	Coloured	524	1788	300W	A, A+, D, E, F, G	Chrome	326	1113	150W	A, A+, D, E, F, G
1200	500	454	124	83	13	6.51	12.6	Coloured	663	2263	300W	A, A+, D, E, F, G	Chrome	431	1471	150W	A, A+, D, E, F, G
1200	600	554	124	83	13	7.56	14.3	Coloured	766	2614	450W	A, A+, D, E, F, G	Chrome	493	1683	300W	A, A+, D, E, F, G
1600	500	454	124	83	17	8.56	16.4	Coloured	879	3000	450W	A, A+, D, E, F, G	Chrome	579	1976	300W	A, A+, D, E, F, G
1600	600	554	124	83	17	9.94	18.6	Coloured	1015	3464	600W	A, A+, D, E, F, G	Chrome	661	2256	300W	A, A+, D, E, F, G

Tunstall Double - Vertical

Height H (mm)	Width W (mm)	Tappings C (mm)	Distance from wall - D (mm)	Tappings from wall - A (mm)	Tube Qty	Water Content L	Weight KG	Colour	▲T60 Watts	▲T60 BTU	Element Output	Element Type	Colour	▲T60 Watts	▲T60 BTU	Element Output	Element Type
1800	280	280	104	65	8	16.9	25.90	Coloured	952	3249	N/A	N/A	-	-	-	-	-
1800	350	350	104	65	10	14.50	30.10	Coloured	1190	4058	N/A	N/A					
1800	420	420	104	65	12	25.3	35.80	Coloured	1429	4877	N/A	N/A	-	-	-	-	-
1800	490	490	104	65	14	20.20	41.10	Coloured	1666	5681	N/A	N/A					
1800	560	560	104	65	16	23.10	47.10	Coloured	1904	6493	N/A	N/A					
1800	630	630	104	65	18	38	51.00	Coloured	2142	7311	N/A	N/A	-	-	-	-	-



Rowsham Towel Rail



Tunstall Vertical



Tunstall Horizontal



Tunstall Towel Rail



Tunstall Double Vertical

Technical Tables & Drawings

ROWSHAM TOWEL RAIL

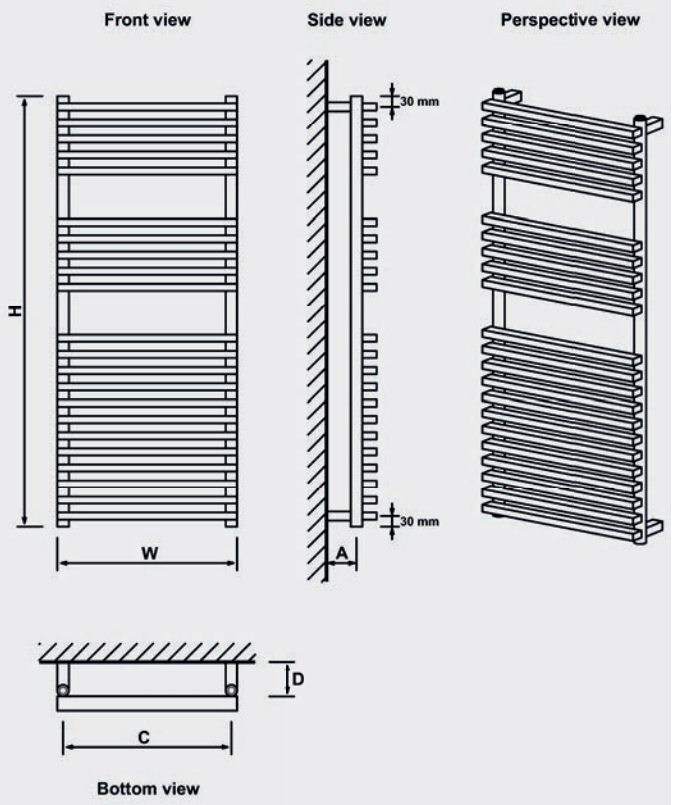

TUNSTALL TOWEL RAIL

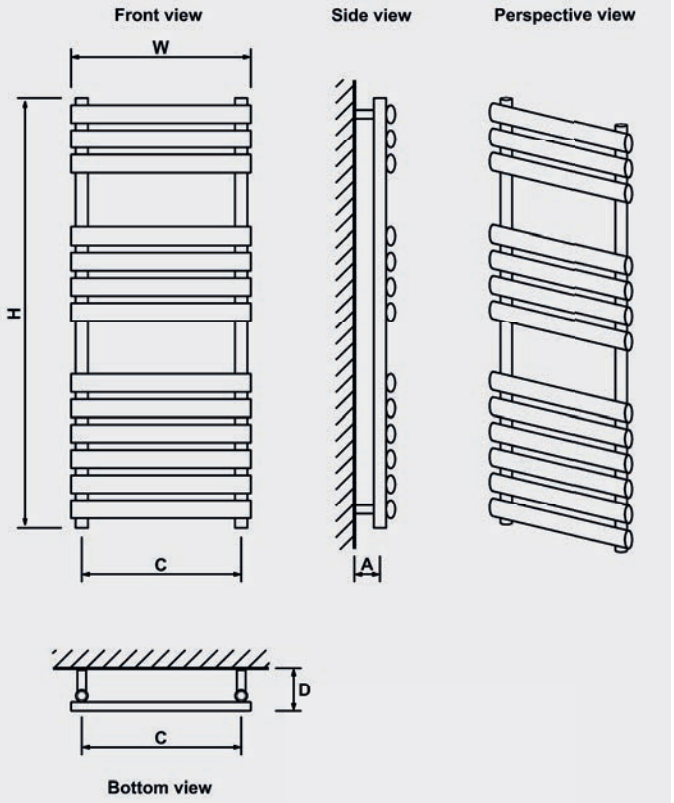

TUNSTALL - VERTICAL

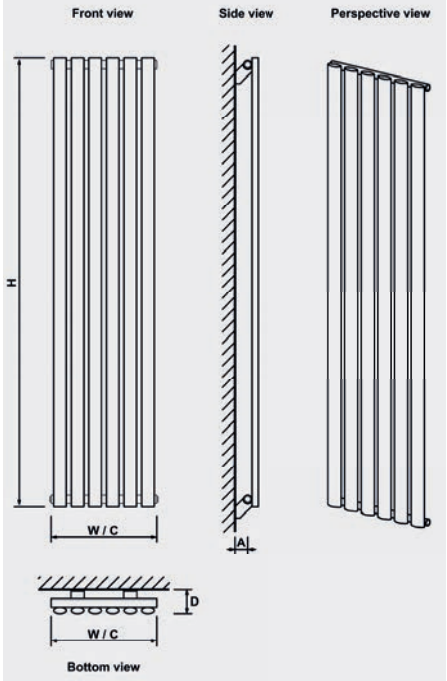

TUNSTALL - HORIZONTAL

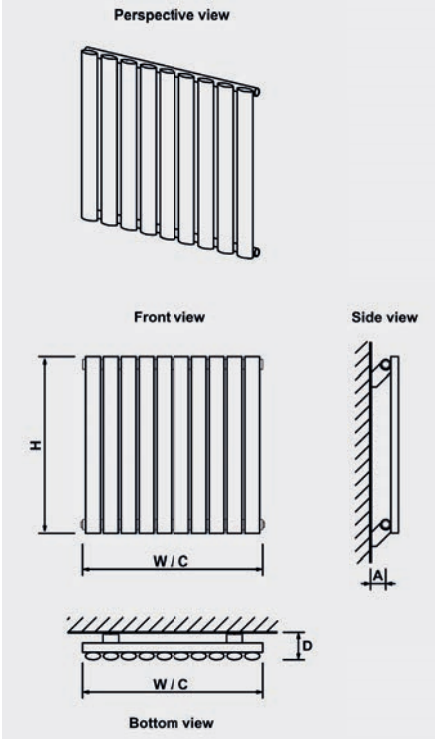

TUNSTALL DOUBLE VERTICAL

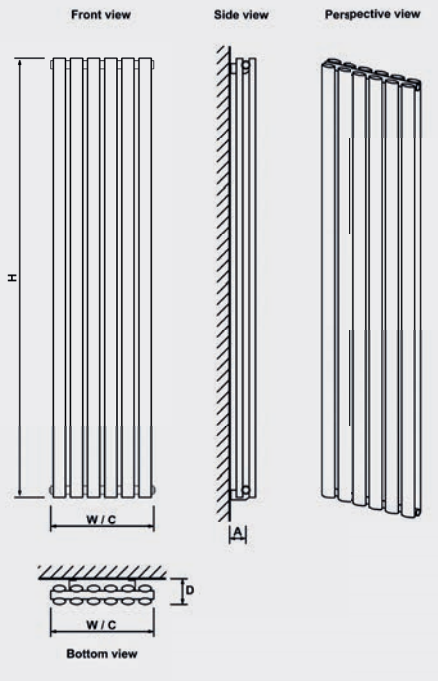

Technical Tables & Drawings

TUNSTALL - DESIGNER RANGE

Tunstall Double - Horizontal

Height H (mm)	Width W (mm)	Tappings C (mm)	Distance from wall - D (mm)	Tappings from wall - A (mm)	Tube Qty	Water Content L	Weight KG	Colour	▲T60 Watts	▲T60 BTU	Element Output	Element Type	Colour	▲T60 Watts	▲T60 BTU	Element Output	Element Type
600	471	471	104	65	16	8.10	17.20	Coloured	734	2503	N/A	N/A					
600	589	589	104	65	20	14.6	21.80	Coloured	818	2792	N/A	N/A	-	-	-	-	-
600	648	648	104	65	22	11.10	23.70	Coloured	1010	3444	N/A	N/A					
600	825	825	104	65	28	20.5	29.50	Coloured	1145	3908	N/A	N/A	-	-	-	-	-
600	1002	1002	104	65	34	24.8	36.60	Coloured	1391	4747	N/A	N/A	-	-	-	-	-
600	1061	1061	104	65	36	18.30	38.60	Coloured	1652	5633	N/A	N/A					
600	1179	1179	104	65	40	29.2	43.60	Coloured	1836	6266	N/A	N/A	-	-	-	-	-

Tunstall Double Towel Rail

Height H (mm)	Width W (mm)	Tappings C (mm)	Distance from wall - D (mm)	Tappings from wall - A (mm)	Tube Qty	Water Content L	Weight KG	Colour	▲T60 Watts	▲T60 BTU	Element Output	Element Type	Colour	▲T60 Watts	▲T60 BTU	Element Output	Element Type
560	1000	954	109-114	70-75	16	19.1	27.90	Coloured	1060	3618	600W	A, A+, D, E, F, G	-	-	-	-	-
800	500	454	109-114	70-75	18	11.5	20.80	Coloured	620	2116	300W	A, A+, D, E, F, G	-	-	-	-	-
800	600	554	109-114	70-75	18	13.5	21.80	Coloured	742	2532	450W	A, A+, D, E, F, G	-	-	-	-	-
1200	500	454	109-114	70-75	26	16.7	29.10	Coloured	893	3048	450W	A, A+, D, E, F, G	-	-	-	-	-
1200	600	554	109-114	70-75	26	19.6	30.20	Coloured	1072	3659	600W	A, A+, D, E, F, G	-	-	-	-	-
1600	500	454	109-114	70-75	34	21.9	36.90	Coloured	1170	3993	600W	A, A+, D, E, F, G	-	-	-	-	-
1600	600	554	109-114	70-75	34	25.8	37.90	Coloured	1405	4795	750W	A, A+, D, E, F, G	-	-	-	-	-

Tunstall Mirror

Height H (mm)	Width W (mm)	Tappings C (mm)	Distance from wall - D (mm)	Tappings from wall - A (mm)	Tube Qty	Water Content L	Weight KG	Colour	▲T60 Watts	▲T60 BTU	Element Output	Element Type	Colour	▲T60 Watts	▲T60 BTU	Element Output	Element Type
1800	380	380	79	40	4	8.6	23.70	Coloured	705	2406	N/A	N/A	-	-	-	-	-
1800	500	500	79	40	6	12.9	28.30	Coloured	1056	3604	N/A	N/A	-	-	-	-	-

Tunstall Double Mirror

Height H (mm)	Width W (mm)	Tappings C (mm)	Distance from wall - D (mm)	Tappings from wall - A (mm)	Tube Qty	Water Content L	Weight KG	Colour	▲T60 Watts	▲T60 BTU	Element Output	Element Type	Colour	▲T60 Watts	▲T60 BTU	Element Output	Element Type
1800	380	380	104	65	8	16.9	33.70	Coloured	1102	3761	N/A	N/A	-	-	-	-	-
1800	500	500	104	65	12	25.3	44.10	Coloured	1654	5645	N/A	N/A	-	-	-	-	-

DEDDINGTON - DESIGNER RANGE

Deddington - Vertical

Height H (mm)	Width W (mm)	Tappings C (mm)	Distance from wall - D (mm)	Tappings from wall - A (mm)	Tube Qty	Water Content L	Weight KG	Colour	▲T60 Watts	▲T60 BTU	Element Output	Element Type	Colour	▲T60 Watts	▲T60 BTU	Element Output	Element Type
1800	310	310	100	60	4	4.20	15.3	Coloured	812	2771	N/A	N/A	Chrome	493	1683	N/A	N/A
1800	390	390	100	60	5	5.20	17.80	Coloured	1021	3484	N/A	N/A	Chrome	611	2085	N/A	N/A
1800	470	470	100	60	6	6.30	22.4	Coloured	1231	4201	N/A	N/A	Chrome	730	2491	N/A	N/A
1800	550	550	100	60	7	7.30	24.90	Coloured	1440	4914	N/A	N/A	Chrome	846	2887	N/A	N/A
1800	630	630	100	60	8	8.40	29.6	Coloured	1649	5627	N/A	N/A	Chrome	962	3283	N/A	N/A



Tunstall Double Horizontal



Tunstall Double Towel Rail



Tunstall Mirror

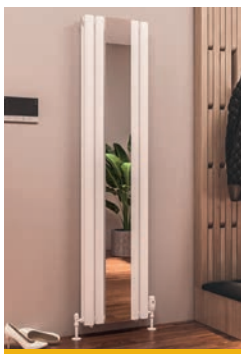

Tunstall Double Mirror



Deddington Vertical

Technical Tables & Drawings

TUNSTALL DOUBLE HORIZONTAL

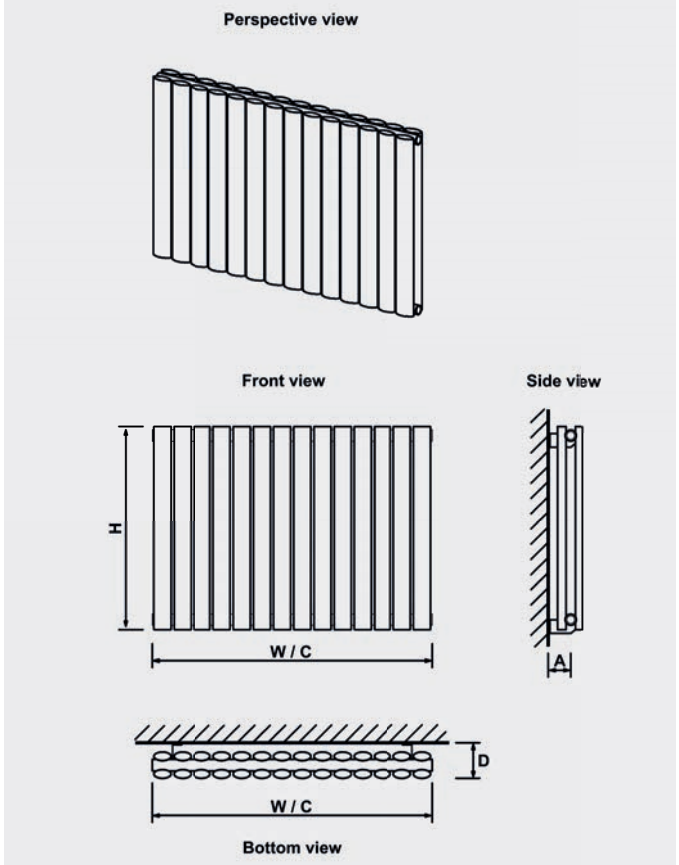

TUNSTALL DOUBLE TOWEL RAIL

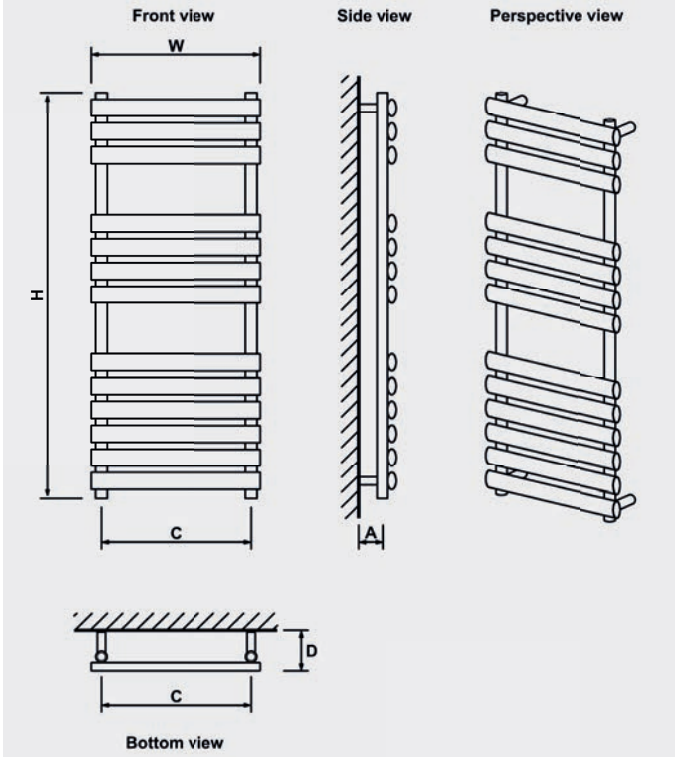

TUNSTALL MIRROR

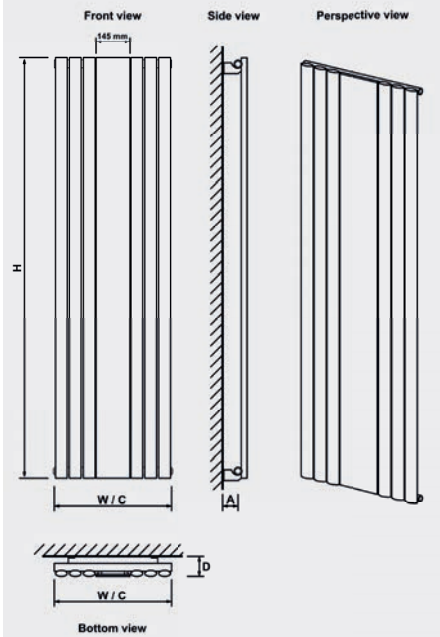

TUNSTALL DOUBLE MIRROR

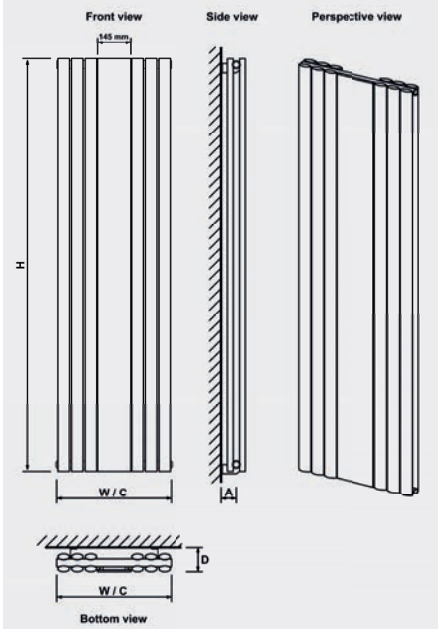

DEDDINGTON VERTICAL

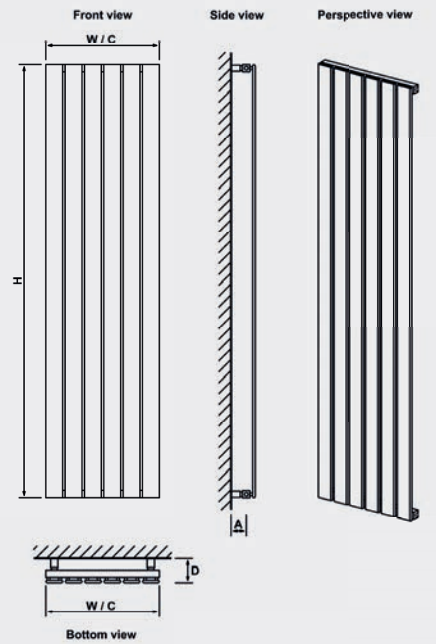

Technical Tables & Drawings

DEDDINGTON - DESIGNER RANGE

Deddington - Horizontal

Height H (mm)	Width W (mm)	Tappings C (mm)	Distance from wall - D (mm)	Tappings from wall - A (mm)	Tube Qty	Water Content L	Weight KG	Colour	▲T60 Watts	▲T60 BTU	Element Output	Element Type	Colour	▲T60 Watts	▲T60 BTU	Element Output	Element Type
600	390	390	100	60	5	2.10	6.70	Coloured	373	1273	N/A	N/A	Chrome	249	850	N/A	N/A
600	470	470	100	60	6	2.50	8.00	Coloured	449	1532	N/A	N/A	Chrome	296	1010	N/A	N/A
600	550	550	100	60	7	2.90	9.40	Coloured	525	1792	N/A	N/A	Chrome	343	1171	N/A	N/A
600	630	630	100	60	8	3.40	11.9	Coloured	602	2055	N/A	N/A	Chrome	390	1331	N/A	N/A
600	790	790	100	60	10	4.30	14.7	Coloured	754	2573	N/A	N/A	Chrome	483	1648	N/A	N/A
600	950	950	100	60	12	5.10	17.6	Coloured	907	3095	N/A	N/A	Chrome	574	1959	N/A	N/A
600	1110	1110	100	60	14	6.00	18.80	Coloured	1059	3614	N/A	N/A	Chrome	664	2266	N/A	N/A
600	1270	1270	100	60	16	6.90	23.5	Coloured	1212	4136	N/A	N/A	Chrome	755	2577	N/A	N/A

Deddington Towel Rails

Height H (mm)	Width W (mm)	Tappings C (mm)	Distance from wall - D (mm)	Tappings from wall - A (mm)	Tube Qty	Water Content L	Weight KG	Colour	▲T60 Watts	▲T60 BTU	Element Output	Element Type	Colour	▲T60 Watts	▲T60 BTU	Element Output	Element Type
800	500	470	100	60	8	3.30	11	Coloured	509	1737	150W	A, A+, D, E, F, G	Chrome	320	1092	150W	A, A+, D, E, F, G
800	600	570	100	60	8	3.70	12.4	Coloured	591	2017	300W	A, A+, D, E, F, G	Chrome	368	1256	150W	A, A+, D, E, F, G
1200	500	470	100	60	11	4.60	15.1	Coloured	725	2474	300W	A, A+, D, E, F, G	Chrome	457	1560	300W	A, A+, D, E, F, G
1200	600	570	100	60	11	5.20	17.3	Coloured	843	2877	300W	A, A+, D, E, F, G	Chrome	525	1792	300W	A, A+, D, E, F, G
1800	500	470	100	60	15	6.50	20.6	Coloured	1031	3518	450W	A, A+, D, E, F, G	Chrome	646	2205	300W	A, A+, D, E, F, G
1800	600	570	100	60	15	7.30	23.6	Coloured	1199	4091	450W	A, A+, D, E, F, G	Chrome	743	2536	450W	A, A+, D, E, F, G

ADDINGTON - DESIGNER RANGE

Addington Type 10 - Vertical / Horizontal

Height H (mm)	Width W (mm)	Vertical Installation Tappings C1 (mm)	Horizontal Installation Tappings C2 (mm)	Distance from wall - D (mm)	Tappings from wall - A (mm)	Tube Qty	Water Content L	Weight KG	Colour	▲T60 Watts	▲T60 BTU	Element Output	Element Type
500	514	514	450	69	40	7	2.63	6.95	Coloured	414	1413	150W	A,A+,C,E,H
500	588	588	450	69	40	8	3.00	7.93	Coloured	473	1614	300W	A,A+,C,E,H
600	292	292	550	69	40	4	1.70	4.60	Coloured	281	958	150W	A,A+
600	366	366	550	69	40	5	2.10	5.80	Coloured	351	1198	150W	A,A+
600	440	440	550	69	40	6	2.50	6.90	Coloured	421	1438	150W	A,A+,C,E,H
600	514	514	550	69	40	7	2.97	8.04	Coloured	492	1679	300W	A,A+,C,E,H
600	588	588	550	69	40	8	3.40	9.18	Coloured	562	1918	300W	A,A+,C,E,H
600	662	662	550	69	40	9	3.80	10.30	Coloured	632	2157	300W	A,A+,C,E,H
600	810	810	550	69	40	11	4.70	12.60	Coloured	772	2636	450W	A+,C,E,H
600	1032	1032	550	69	40	14	6.00	16.00	Coloured	983	3355	600W	A,A+,C,E,H
600	1180	1180	550	69	40	16	6.80	18.30	Coloured	1124	3834	600W	A,A+,C,E,H
600	1254	1254	550	69	40	17	7.20	19.40	Coloured	1194	4073	600W	A,A+,C,E,H
800	514	514	750	69	40	7	3.67	10.22	Coloured	642	2191	300W	A,A+,C,H
800	588	588	750	69	40	8	4.19	11.67	Coloured	733	2501	450W	A,A+,C,H
1000	514	514	950	69	40	7	4.36	12.41	Coloured	786	2682	450W	A,A+,C,H
1000	588	588	950	69	40	8	4.99	14.17	Coloured	898	3064	450W	A,A+,C,H
1200	514	514	1150	69	40	7	5.06	14.59	Coloured	923	3149	450W	A,A+,C,H
1200	588	588	1150	69	40	8	5.78	16.66	Coloured	1055	3600	600W	A+,C,H
1400	514	514	1350	69	40	7	5.75	16.78	Coloured	1055	3600	600W	A+,C,H
1400	588	588	1350	69	40	8	6.57	19.16	Coloured	1206	4115	600W	A+,C,H
1800	292	292	1750	69	40	4	4.08	12.12	Coloured	744	2539	N/A	N/A
1800	366	366	1750	69	40	5	5.10	15.13	Coloured	931	3177	N/A	N/A
1800	440	440	1750	69	40	6	6.12	18.14	Coloured	1117	3811	450W	A, A+
1800	514	514	1750	69	40	7	7.14	21.14	Coloured	1303	4446	600W	A+
1800	588	588	1750	69	40	8	8.16	24.15	Coloured	1489	5080	600W	A+

*In horizontal installation, the above Heights become Widths and above Widths become Heights



Deddington
Horizontal



Deddington
Towel Rail



Addington Type 10
Vertical / Horizontal

Technical Tables & Drawings

DEDDINGTON HORIZONTAL

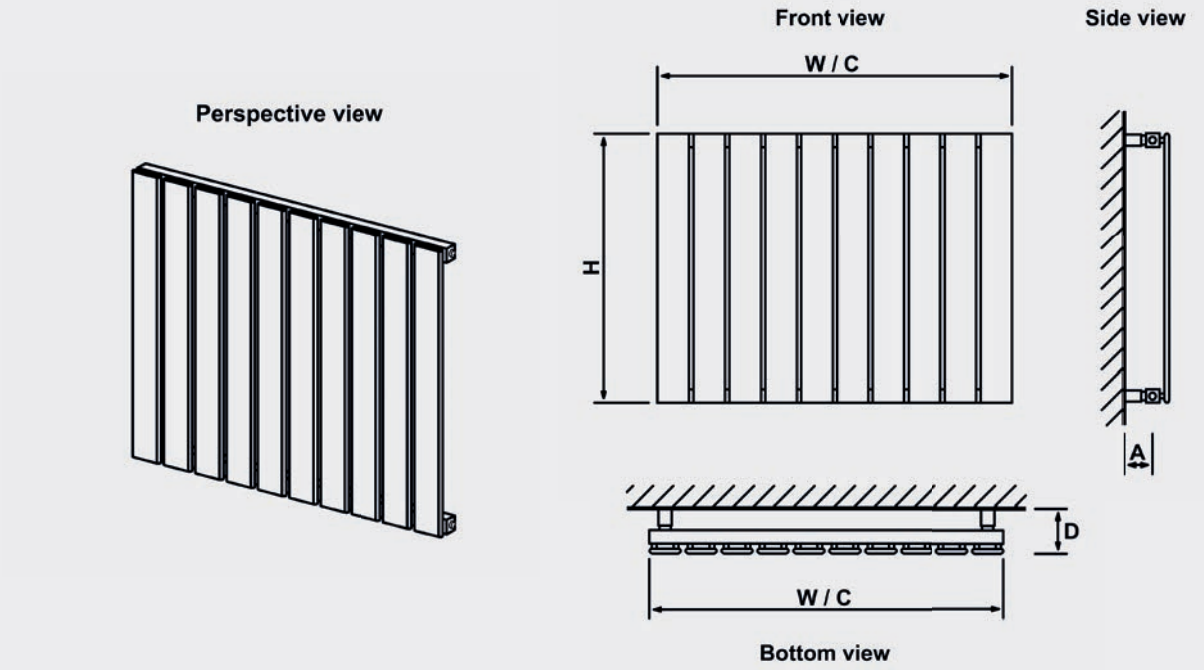

DEDDINGTON TOWEL RAIL

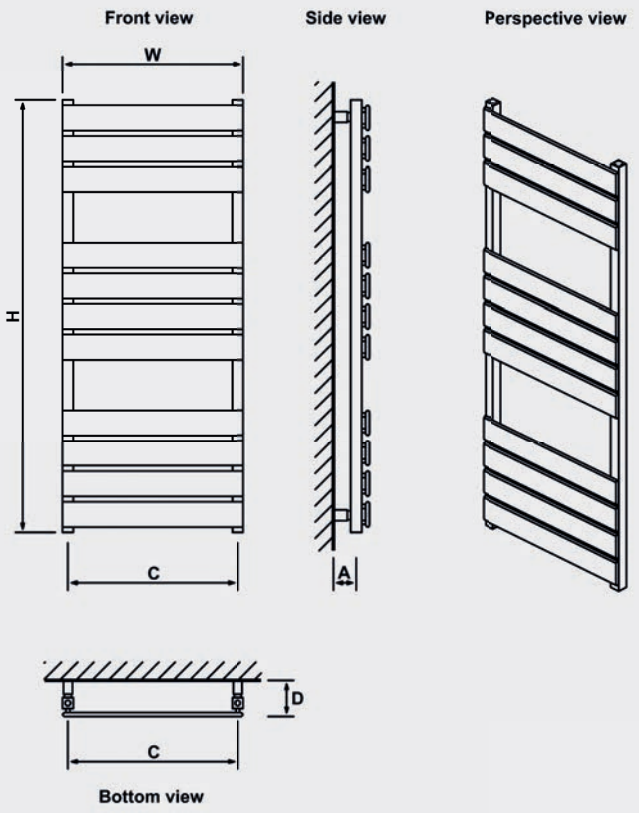

ADDINGTON TYPE 10 VERTICAL / HORIZONTAL

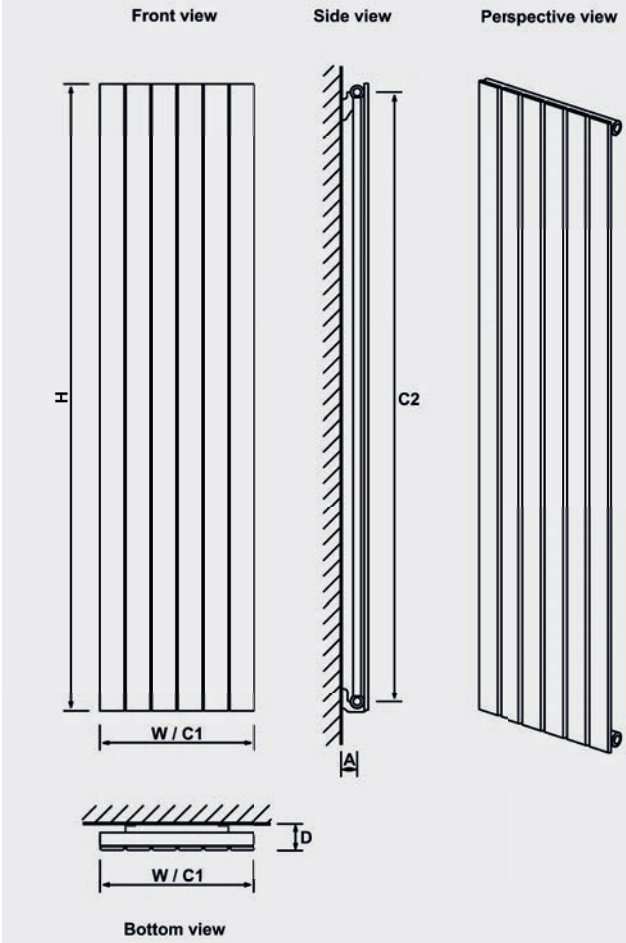

Technical Tables & Drawings

ADDINGTON - DESIGNER RANGE

Addington Type 20 - Vertical / Horizontal

Height H (mm)	Width W (mm)	Vertical Installation Tappings C1 (mm)	Horizontal Installation Tappings C2 (mm)	Distance from wall - D (mm)	Tappings from wall - A (mm)	Tube Qty	Water Content L	Weight KG	Colour	▲T60 Watts	▲T60 BTU	Element Output	Element Type
600	292	292	550	93	64	8	2.9	8.4	Coloured	401	1369	150W	A,A+
600	366	366	550	93	64	10	3.7	10.4	Coloured	502	1712	300W	A,A+
600	440	440	550	93	64	12	4.4	12.5	Coloured	602	2054	300W	A,A+,C,H
600	514	514	550	93	64	14	5.2	14.6	Coloured	702	2396	300W	A,A+,C,H
600	588	588	550	93	64	16	5.9	16.7	Coloured	803	2738	450W	A,A+,C,H
600	662	662	550	93	64	18	6.6	18.7	Coloured	903	3081	450W	A,A+,C,H
600	810	810	550	93	64	22	8.1	22.9	Coloured	1104	3765	600W	A,A+,C,E,H
600	1032	1032	550	93	64	28	10.3	29.1	Coloured	1405	4792	750W	A,A+,C,E,H
600	1180	1180	550	93	64	32	11.8	33.2	Coloured	1605	5477	900W	A,A+,C,E,H
600	1254	1254	550	93	64	34	12.5	35.3	Coloured	1706	5819	1000W	A,A+,C,E,H
1800	366	366	1750	93	64	10	9.63	29.17	Coloured	1329	4535	300W	A,A+
1800	440	440	1750	93	64	12	11.56	34.98	Coloured	1595	5442	450W	A,A+
1800	514	514	1750	93	64	14	13.49	40.80	Coloured	1861	6350	600W	A+
1800	588	588	1750	93	64	16	15.41	46.62	Coloured	2127	7257	600W	A+

*In horizontal installation, the above Heights become Widths and above Widths become Heights

Addington Type 10 Towel Rail

Height H (mm)	Width W (mm)	Tappings C (mm)	Distance from wall - D (mm)	Tappings from wall - A (mm)	Tube Qty	Water Content L	Weight KG	Colour	▲T60 Watts	▲T60 BTU	Element Output	Element Type	Colour	▲T60 Watts	▲T60 BTU	Element Output	Element Type
790	400	350	69	40	8	3.20	8.50	Coloured	374	1276	150W	A, A+, D, E, F, G	-	-	-	-	-
790	500	450	69	40	8	3.60	10.00	Coloured	467	1593	150W	A, A+, D, E, F, G	-	-	-	-	-
790	600	550	69	40	8	4.00	11.30	Coloured	560	1911	300W	A, A+, D, E, F, G	-	-	-	-	-
1110	400	350	69	40	10	4.20	11.00	Coloured	492	1679	300W	A, A+, D, E, F, G	-	-	-	-	-
1110	500	450	69	40	10	4.70	12.75	Coloured	610	2081	300W	A, A+, D, E, F, G	-	-	-	-	-
1110	600	550	69	40	10	5.30	14.50	Coloured	731	2494	450W	A, A+, D, E, F, G	-	-	-	-	-
1750	400	350	69	40	14	6.30	16.00	Coloured	729	2487	450W	A, A+, D, E, F, G	-	-	-	-	-
1750	500	450	69	40	14	7.00	18.50	Coloured	885	3020	450W	A, A+, D, E, F, G	-	-	-	-	-
1750	600	550	69	40	14	7.70	21.00	Coloured	1062	3624	600W	A, A+, D, E, F, G	-	-	-	-	-

Addington Type 20 Towel Rail

Height H (mm)	Width W (mm)	Tappings C (mm)	Distance from wall - D (mm)	Tappings from wall - A (mm)	Tube Qty	Water Content L	Weight KG	Colour	▲T60 Watts	▲T60 BTU	Element Output	Element Type
1110	500	450	93	64	20	4.70	16.75	Coloured	826	2817	450W	A, A+, D, E, F, G
1750	500	450	93	64	28	10.60	29.70	Coloured	1163	3966	600W	A, A+, D, E, F, G



Addington Type 20
Vertical / Horizontal



Addington Type 10
Towel Rail



Addington Type 20
Towel Rail

Technical Tables & Drawings

ADDINGTON TYPE 20 VERTICAL / HORIZONTAL

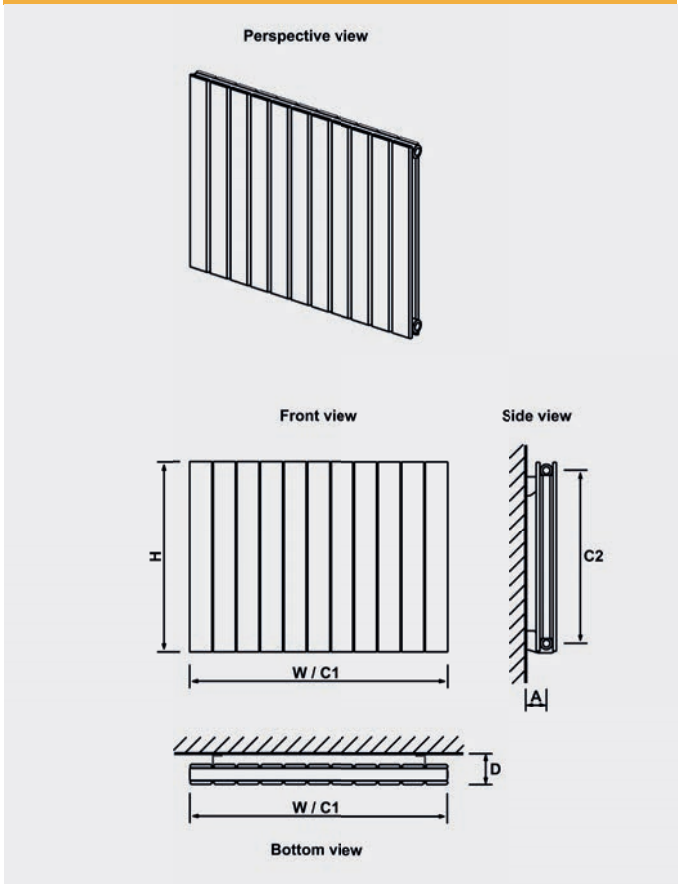

ADDINGTON TYPE 10 TOWEL RAIL

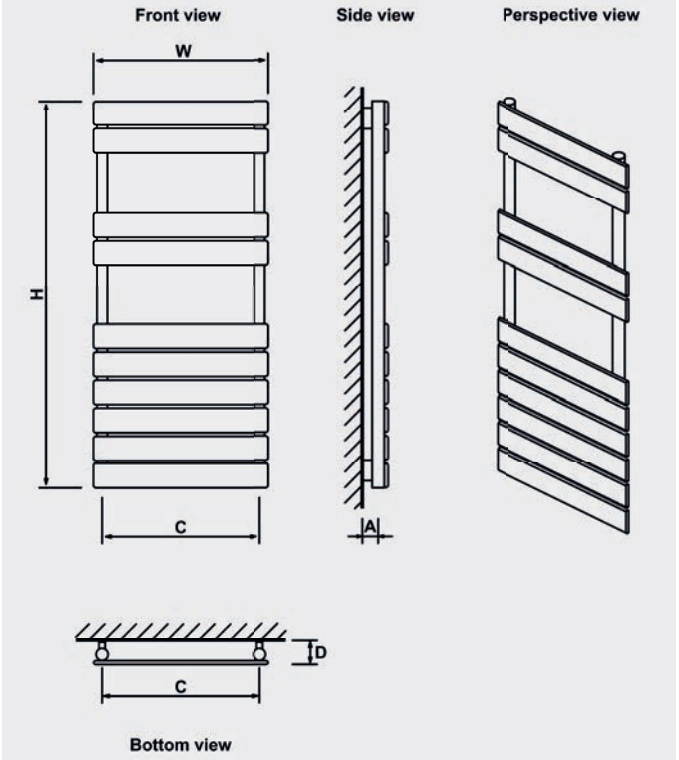

ADDINGTON TYPE 20 TOWEL RAIL

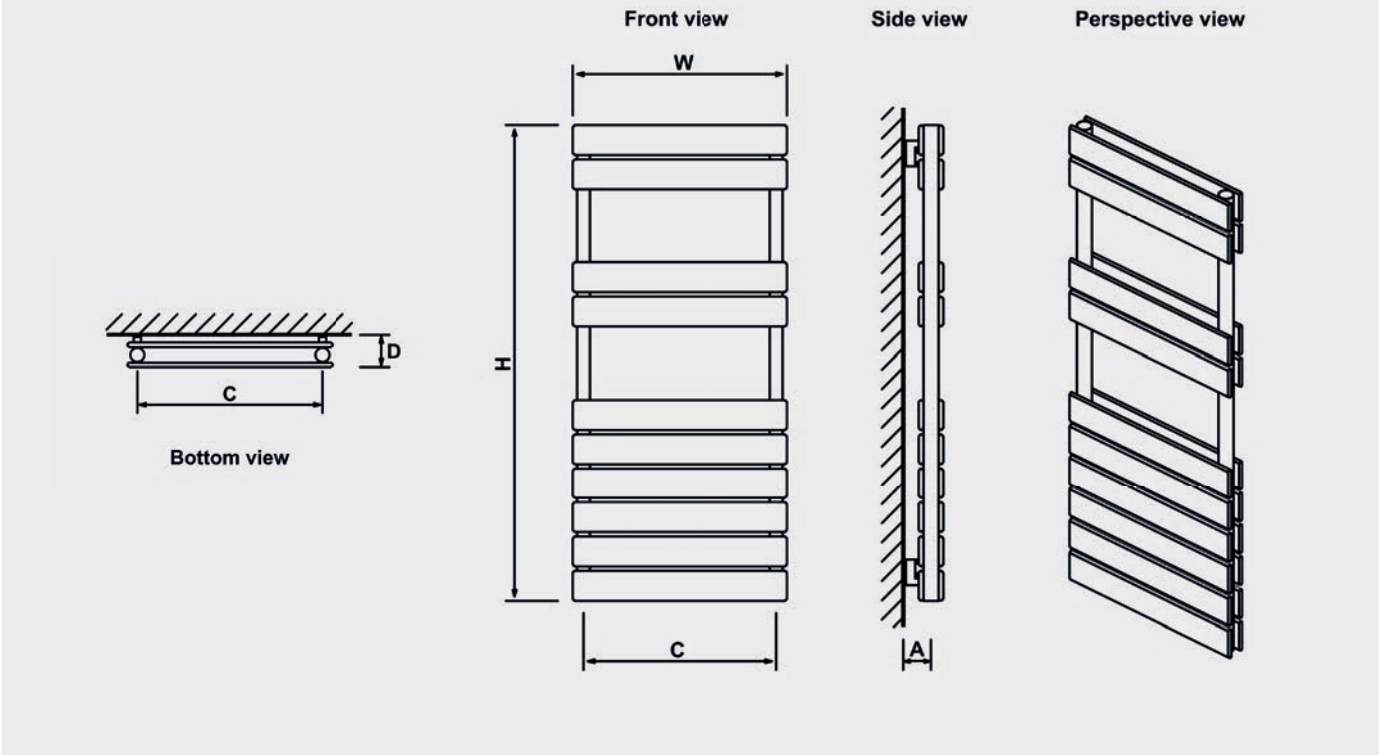

Technical Tables & Drawings

ADDINGTON - DESIGNER RANGE

Addington Type 21 - Horizontal

Height H (mm)	Width W (mm)	Tappings C (mm)	Distance from wall - D (mm)	Tappings from wall - A (mm)	Tube Qty	Water Content L	Weight KG	Colour	▲T60 Watts	▲T60 BTU	Element Output	Element Type
558	600	550	115	75	16	6.75	20.48	Coloured	994	3392	600W	A+
558	800	750	115	75	16	8.52	26.86	Coloured	1325	4521	600W	A, A+
558	1000	950	115	75	16	10.28	33.23	Coloured	1694	5780	600W	A, A+
588	1200	1150	115	75	16	12.04	39.60	Coloured	1983	6766	600W	A, A+

Addington Type 22 - Horizontal

Height H (mm)	Width W (mm)	Tappings C (mm)	Distance from wall - D (mm)	Tappings from wall - A (mm)	Tube Qty	Water Content L	Weight KG	Colour	▲T60 Watts	▲T60 BTU	Element Output	Element Type
292	1200	1150	135	85	8	5.80	21.70	Coloured	1703	5811	N/A	N/A
558	600	550	135	85	16	6.80	22.50	Coloured	1252	4272	600W	A+
558	800	750	135	85	16	8.40	29.50	Coloured	1670	5698	600W	A, A+
588	1000	950	135	85	16	10.00	36.40	Coloured	2099	7162	600W	A, A+
588	1200	1150	135	85	16	12.60	43.40	Coloured	2519	8595	600W	A, A+

Addington Type 21 Towel Rail

Height H (mm)	Width W (mm)	Tappings C (mm)	Distance from wall - D (mm)	Tappings from wall - A (mm)	Tube Qty	Water Content L	Weight KG	Colour	▲T60 Watts	▲T60 BTU	Element Output	Element Type
1110	500	450	115	75	20	5.70	18.88	Coloured	1060	3615	600W	A, A+, D, E, F, G
1750	500	450	115	75	28	12.10	35.65	Coloured	1455	4962	900W	A, A+, D, E, F, G

WINGRAVE FLAT PANEL - FLAT PANEL RANGE

Wingrave Flat Panel

Height H (mm)	Width W (mm)	Tappings C1/C2 (mm)	Distance from wall - D (mm)	Tappings from wall - A (mm)	Tube Qty	Water Content L	Weight KG	Colour	▲T60 Watts	▲T60 BTU	Element Output	Element Type
1200	310	255/50	96	73	26	4.80	9.70	Coloured	470	1604	150W	A, A+, D, E, F, G
1200	410	355/50	96	73	26	5.60	11.50	Coloured	593	2023	300W	A, A+, D, E, F, G
1200	510	455/50	96	73	26	6.50	13.40	Coloured	716	2443	300W	A, A+, D, E, F, G
1200	610	555/50	96	73	26	7.30	15.40	Coloured	840	2866	450W	A, A+, D, E, F, G
1800	310	255/50	96	73	38	7.00	14.10	Coloured	694	2368	300W	A, A+, D, E, F, G
1800	410	355/50	96	73	38	8.30	16.90	Coloured	874	2982	450W	A, A+, D, E, F, G
1800	510	455/50	96	73	38	9.50	19.80	Coloured	1054	3596	450W	A, A+, D, E, F, G
1800	610	555/50	96	73	38	10.80	22.70	Coloured	1234	4211	600W	A, A+, D, E, F, G



Addington Type 21 Horizontal



Addington Type 22 Horizontal



Addington Type 21 Towel Rail



Wingrave Flat Panel

Technical Tables & Drawings

ADDINGTON TYPE 21 HORIZONTAL

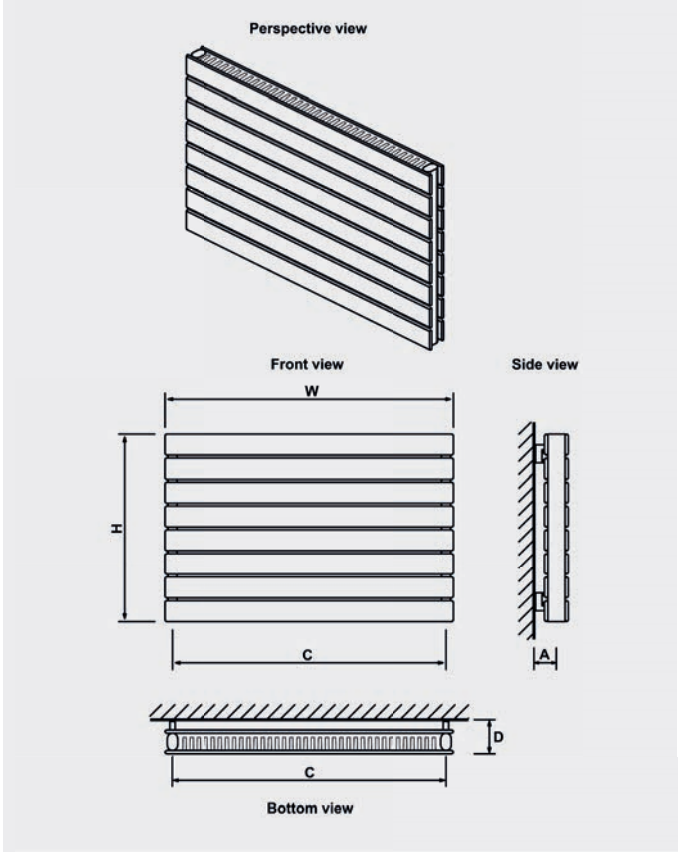

ADDINGTON TYPE 22 HORIZONTAL

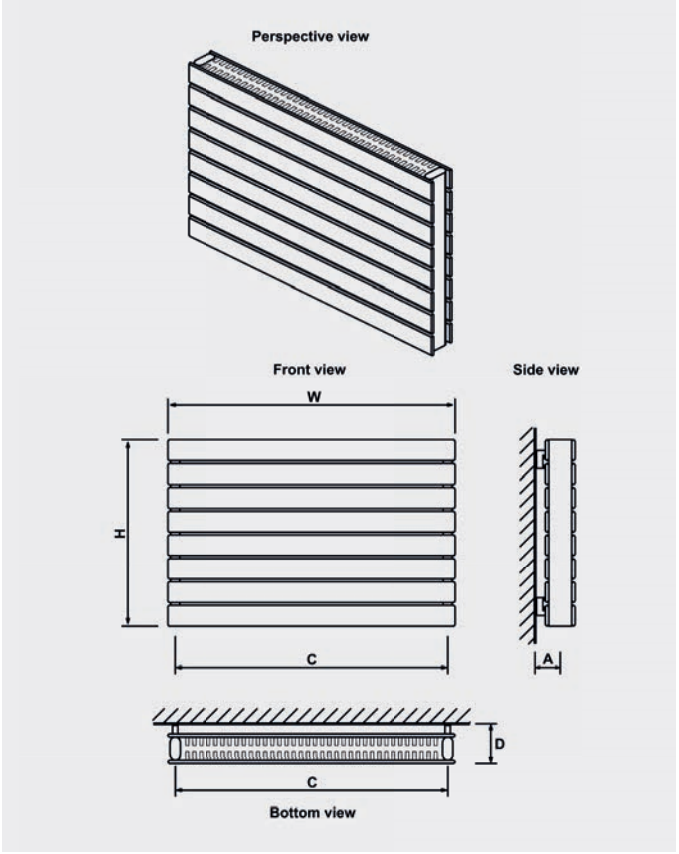

ADDINGTON TYPE 21 TOWEL RAIL

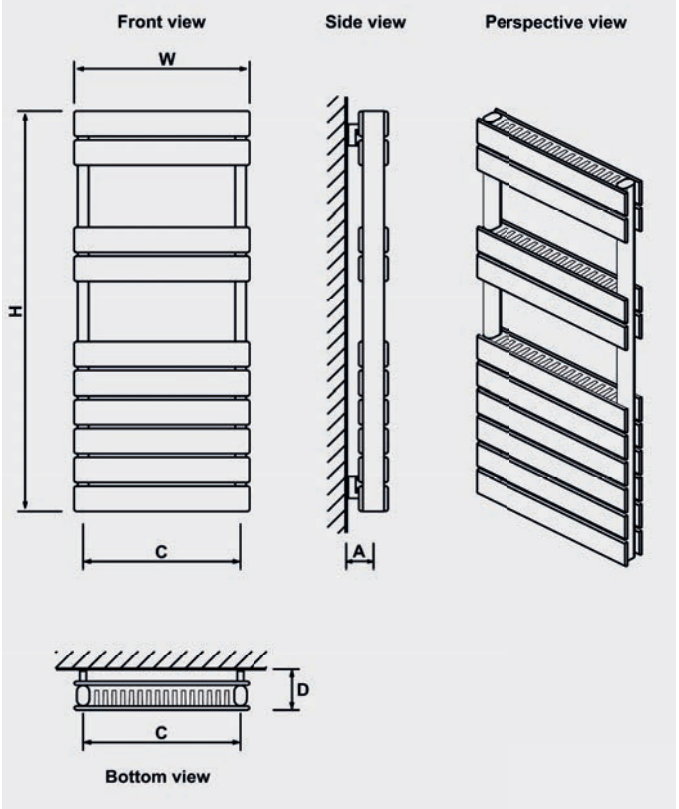

WINGRAVE FLAT PANEL

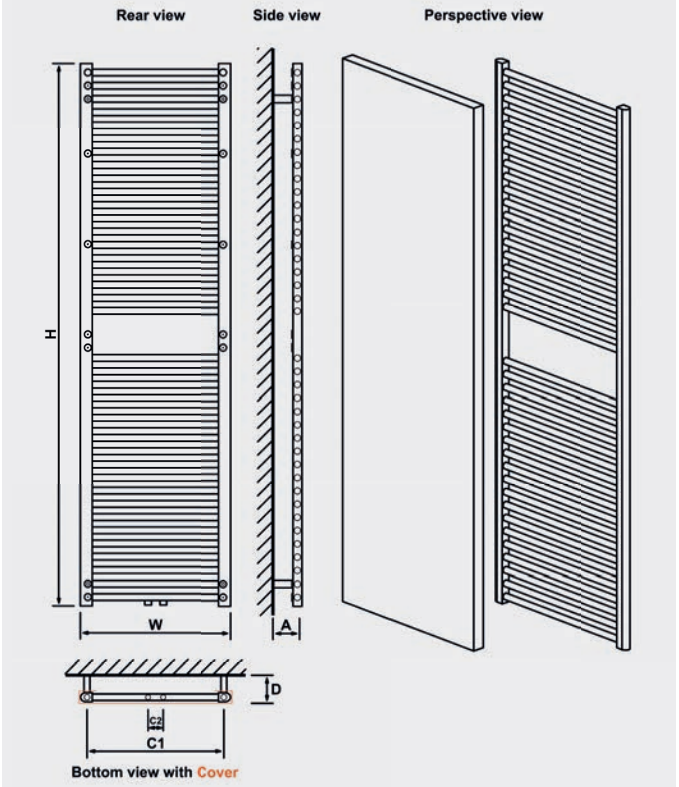

Technical Tables & Drawings

FLAT PANEL - FLAT PANEL RANGE

Type 11 Flat Panel Radiator

Height H (mm)	Width W (mm)	Tappings C1/C2 (mm)	Distance from wall - D (mm)	Tappings from wall - A (mm)	Tube Qty	Water Content L	Weight KG	Colour	▲T60 Watts	▲T60 BTU	Element Output	Element Type	Colour	▲T60 Watts	▲T60 BTU	Element Output	Element Type
400	600	600	76	42	-	-	8.7	Coloured	439	1497	-	-	-	-	-	-	-
400	800	800	76	42	-	-	11.5	Coloured	586	1998	-	-	-	-	-	-	-
400	1000	1000	76	42	-	-	14.4	Coloured	733	2500	-	-	-	-	-	-	-
400	1200	1200	76	42	-	-	17.3	Coloured	881	3005	-	-	-	-	-	-	-
400	1400	1400	76	42	-	-	20.1	Coloured	1027	3502	-	-	-	-	-	-	-
400	1600	1600	76	42	-	-	23.0	Coloured	1175	4007	-	-	-	-	-	-	-
500	400	400	76	42	-	-	7.1	Coloured	360	1225	-	-	-	-	-	-	-
500	600	600	76	42	-	-	10.8	Coloured	541	1844	-	-	-	-	-	-	-
500	800	800	76	42	-	-	14.2	Coloured	722	2460	-	-	-	-	-	-	-
500	1000	1000	76	42	-	-	17.7	Coloured	903	3080	-	-	-	-	-	-	-
500	1200	1200	76	42	-	-	21.2	Coloured	1085	3699	-	-	-	-	-	-	-
500	1400	1400	76	42	-	-	24.8	Coloured	1266	4315	-	-	-	-	-	-	-
500	1600	1600	76	42	-	-	28.3	Coloured	1447	4934	-	-	-	-	-	-	-
600	400	400	76	42	-	-	8.5	Coloured	424	1443	-	-	-	-	-	-	-
600	600	600	76	42	-	-	13.7	Coloured	638	2174	-	-	-	-	-	-	-
600	800	800	76	42	-	-	16.9	Coloured	851	2901	-	-	-	-	-	-	-
600	1000	1000	76	42	-	-	21.1	Coloured	1064	3628	-	-	-	-	-	-	-
600	1200	1200	76	42	-	-	25.3	Coloured	1277	4354	-	-	-	-	-	-	-
600	1400	1400	76	42	-	-	29.5	Coloured	1490	5081	-	-	-	-	-	-	-
600	1600	1600	76	42	-	-	33.7	Coloured	1705	5812	-	-	-	-	-	-	-
600	1800	1800	76	42	-	-	38.0	Coloured	1918	6538	-	-	-	-	-	-	-

FLAT PANEL - FLAT PANEL RANGE

Type 22 Flat Panel Radiator

Height H (mm)	Width W (mm)	Tappings C (mm)	Distance from wall - D (mm)	Tappings from wall - A (mm)	Tube Qty	Water Content L	Weight KG	Colour	▲T60 Watts	▲T60 BTU	Element Output	Element Type	Colour	▲T60 Watts	▲T60 BTU	Element Output	Element Type
400	600	600	128.5 / 139.5	77 / 88	-	-	15.0	Coloured	815	2779	-	-	-	-	-	-	-
400	800	800	128.5 / 139.5	77 / 88	-	-	20.0	Coloured	1085	3699	-	-	-	-	-	-	-
400	1000	1000	128.5 / 139.5	77 / 88	-	-	24.9	Coloured	1354	4616	-	-	-	-	-	-	-
400	1200	1200	128.5 / 139.5	77 / 88	-	-	29.9	Coloured	1624	5536	-	-	-	-	-	-	-
400	1400	1400	128.5 / 139.5	77 / 88	-	-	34.9	Coloured	1894	6456	-	-	-	-	-	-	-
400	1600	1600	128.5 / 139.5	77 / 88	-	-	39.8	Coloured	2161	7369	-	-	-	-	-	-	-
500	400	400	128.5 / 139.5	77 / 88	-	-	11.4	Coloured	647	2206	-	-	-	-	-	-	-
500	600	600	128.5 / 139.5	77 / 88	-	-	17.1	Coloured	973	3316	-	-	-	-	-	-	-
500	800	800	128.5 / 139.5	77 / 88	-	-	22.8	Coloured	1297	4422	-	-	-	-	-	-	-
500	1000	1000	128.5 / 139.5	77 / 88	-	-	28.4	Coloured	1623	5532	-	-	-	-	-	-	-
500	1200	1200	128.5 / 139.5	77 / 88	-	-	34.1	Coloured	1947	6639	-	-	-	-	-	-	-
500	1400	1400	128.5 / 139.5	77 / 88	-	-	39.8	Coloured	2272	7745	-	-	-	-	-	-	-
500	1600	1600	128.5 / 139.5	77 / 88	-	-	45.5	Coloured	2597	8855	-	-	-	-	-	-	-
600	400	400	128.5 / 139.5	77 / 88	-	-	14.0	Coloured	765	2607	-	-	-	-	-	-	-
600	600	600	128.5 / 139.5	77 / 88	-	-	21.0	Coloured	1147	3910	-	-	-	-	-	-	-
600	800	800	128.5 / 139.5	77 / 88	-	-	27.9	Coloured	1529	5214	-	-	-	-	-	-	-
600	1000	1000	128.5 / 139.5	77 / 88	-	-	34.9	Coloured	1911	6517	-	-	-	-	-	-	-
600	1200	1200	128.5 / 139.5	77 / 88	-	-	41.9	Coloured	2294	7820	-	-	-	-	-	-	-
600	1400	1400	128.5 / 139.5	77 / 88	-	-	48.8	Coloured	2676	9124	-	-	-	-	-	-	-
600	1600	1600	128.5 / 139.5	77 / 88	-	-	55.8	Coloured	3058	10427	-	-	-	-	-	-	-
600	1800	1800	128.5 / 139.5	77 / 88	-	-	62.8	Coloured	3440	11730	-	-	-	-	-	-	-



Flat Panel Type 11 Radiator



Flat Panel Type 22 Radiator

Technical Tables & Drawings

TYPE 11 FLAT PANEL RADIATOR

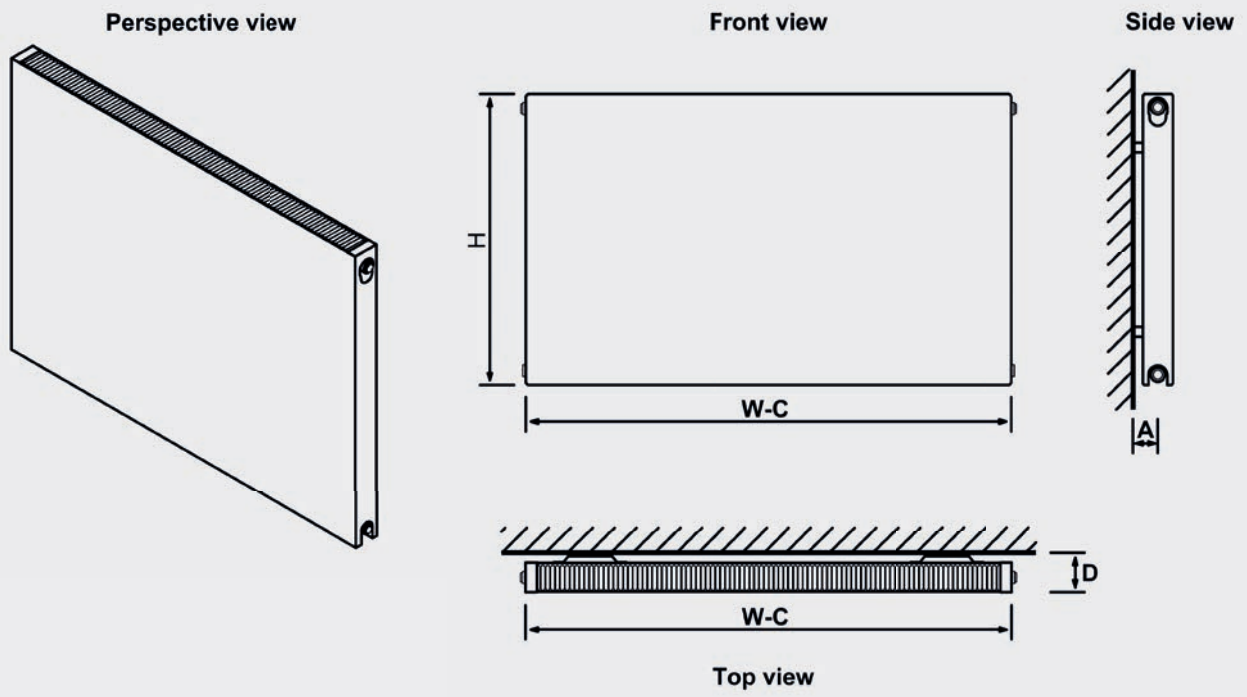

TYPE 22 FLAT PANEL RADIATOR

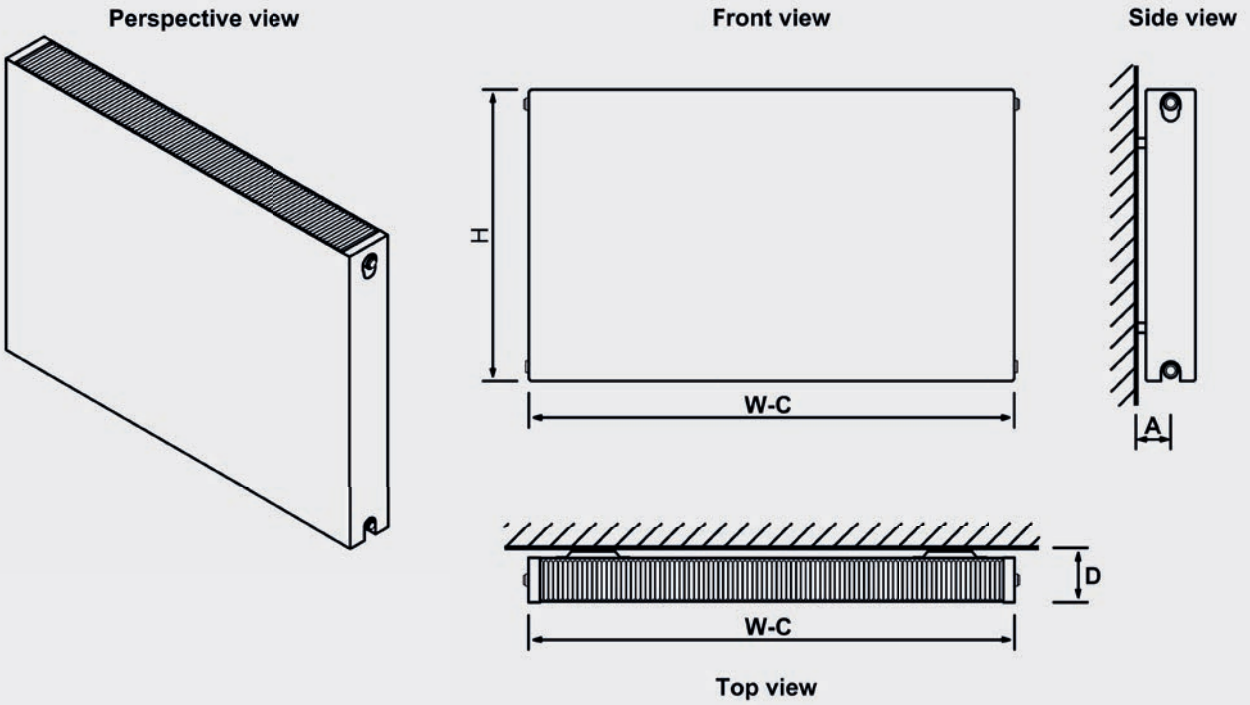

Technical Tables & Drawings

PELAGO - ALUMINIUM RANGE

Pelago Towel Rail

Height H (mm)	Width W (mm)	Tappings C (mm)	Distance from wall - D (mm)	Tappings from wall - A (mm)	Tube Qty	Water Content L	Weight KG	Colour	▲T60 Watts	▲T60 BTU	Element Output	Element Type	Colour	▲T60 Watts	▲T60 BTU	Element Output	Element Type
600	500	475	88-118	75-105	5	0.73	2.3	Coloured	296	1011	150W	A, A+, D, E	Polished	287	981	150W	A, A+
600	600	575	88-118	75-105	5	0.80	2.6	Coloured	356	1213	150W	A, A+, D, E	Polished	345	1177	150W	A, A+
1200	500	475	88-118	75-105	9	1.37	4.3	Coloured	566	1931	300W	A, A+, D, E	Polished	549	1873	300W	A, A+
1200	600	575	88-118	75-105	9	1.51	4.8	Coloured	679	2317	300W	A, A+, D, E	Polished	659	2248	300W	A, A+
1800	500	475	88-118	75-105	14	2.10	6.5	Coloured	907	3094	450W	A+, D, E	Polished	880	3001	450W	A, A+
1800	600	575	88-118	75-105	14	2.31	7.3	Coloured	1088	3712	600W	A, A+, D, E	Polished	1055	3601	600W	A, A+

VELOR - ALUMINIUM RANGE

Velor Towel Rail

Height H (mm)	Width W (mm)	Tappings C (mm)	Distance from wall - D (mm)	Tappings from wall - A (mm)	Tube Qty	Water Content L	Weight KG	Colour	▲T60 Watts	▲T60 BTU	Element Output	Element Type
600	500	475	100-130	80-110	8	0.70	3.4	Coloured	266	908	150W	A, A+, D, E
600	600	575	100-130	80-110	8	0.80	3.8	Coloured	319	1090	150W	A, A+, D, E
1200	500	475	100-130	80-110	21	1.81	7.8	Coloured	699	2384	300W	A, A+, D, E
1200	600	575	100-130	80-110	21	2.10	8.9	Coloured	838	2861	450W	A, A+, D, E
1800	500	475	100-130	80-110	31	2.67	11.4	Coloured	1031	3519	600W	A, A+, D, E
1800	600	575	100-130	80-110	31	3.10	13.1	Coloured	1238	4223	750W	A, A+, D, E

CHARLTON - ALUMINIUM RANGE

Charlton - Vertical

Height H (mm)	Width W (mm)	Tappings C (mm)	Distance from wall - D (mm)	Tappings from wall - A (mm)	Tube Qty	Water Content L	Weight KG	Colour	▲T60 Watts	▲T60 BTU	Element Output	Element Type
600	280	280	71/91	33/53	3	0.60	3.75	Coloured	305	1041	150W	A, A+, F, G
1200	280	280	71/91	33/53	3	1.20	4.60	Coloured	585	1997	300W	A, A+, F, G
1200	375	375	71/91	33/53	4	1.60	6.10	Coloured	775	2645	300W	A, A+, F, G
1200	470	470	71/91	33/53	5	2.00	7.70	Coloured	963	3286	450W	A, A+, F, G
1200	565	565	71/91	33/53	6	2.40	9.20	Coloured	1150	3924	600W	A, A+, F, G
1800	280	280	71/91	33/53	3	1.80	8.1	Coloured	844	2880	450W	A, A+, F, G
1800	375	375	71/91	33/53	4	2.40	10.3	Coloured	1119	3819	600W	A, A+, F, G
1800	470	470	71/91	33/53	5	3.00	12.8	Coloured	1391	4747	750W	A, A+, F, G
1800	565	565	71/91	33/53	6	3.50	14.80	Coloured	1661	5668	1000W	A, A+, F, G

Charlton - Horizontal

Height H (mm)	Width W (mm)	Tappings C (mm)	Distance from wall - D (mm)	Tappings from wall - A (mm)	Tube Qty	Water Content L	Weight KG	Colour	▲T60 Watts	▲T60 BTU	Element Output	Element Type
600	470	470	71/91	33/53	5	1.10	5.70	Coloured	503	1717	300W	A, A+, C, H
600	660	660	71/91	33/53	7	1.50	7.80	Coloured	697	2379	450W	A, A+, C, H
600	850	850	71/91	33/53	9	2.00	9.50	Coloured	890	3037	600W	A, A+, C, H
600	1040	1040	71/91	33/53	11	2.40	11.50	Coloured	1081	3689	750W	A, A+, C, H
600	1230	1230	71/91	33/53	13	2.90	13.50	Coloured	1271	4337	900W	A, A+, C, H
600	1420	1420	71/91	33/53	15	3.30	12.30	Coloured	1460	4982	900W	A, A+, C, H



Pelago Towel Rail



Velor Towel Rail



Charlton Vertical



Charlton Horizontal

Technical Tables & Drawings

PELAGO TOWEL RAIL

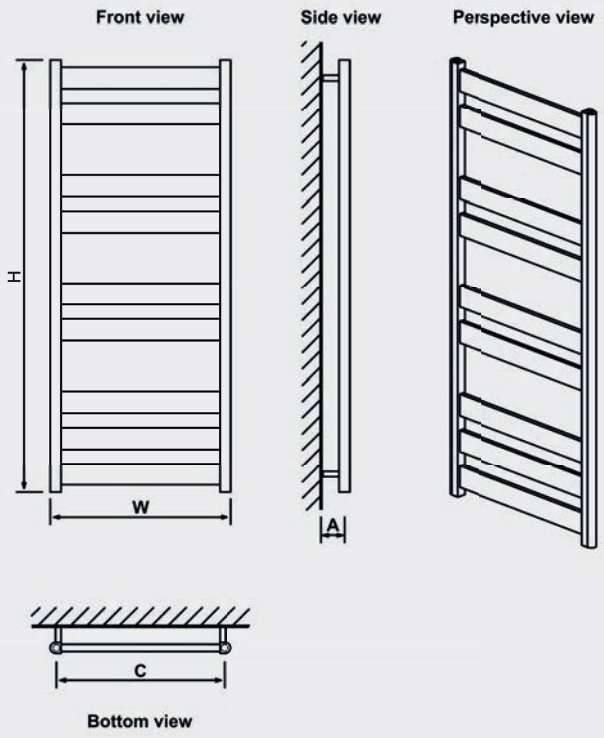

VELOR TOWEL RAIL

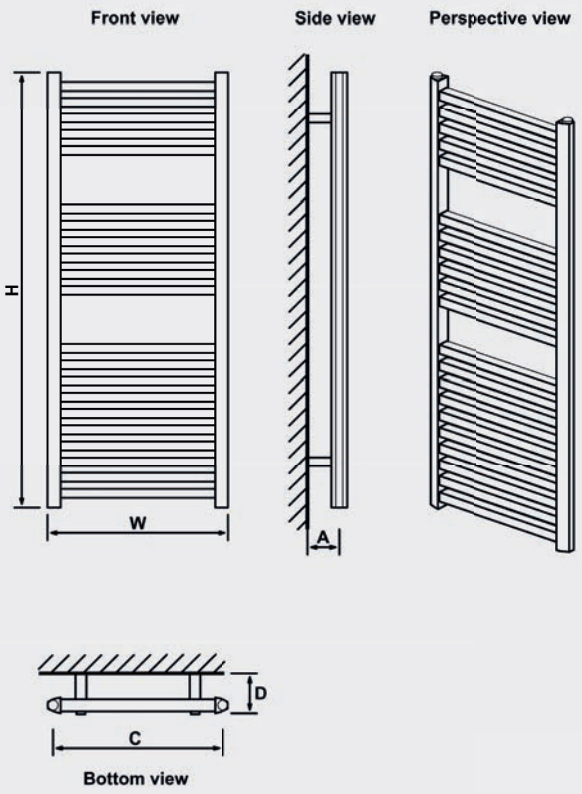

CHARLTON - VERTICAL

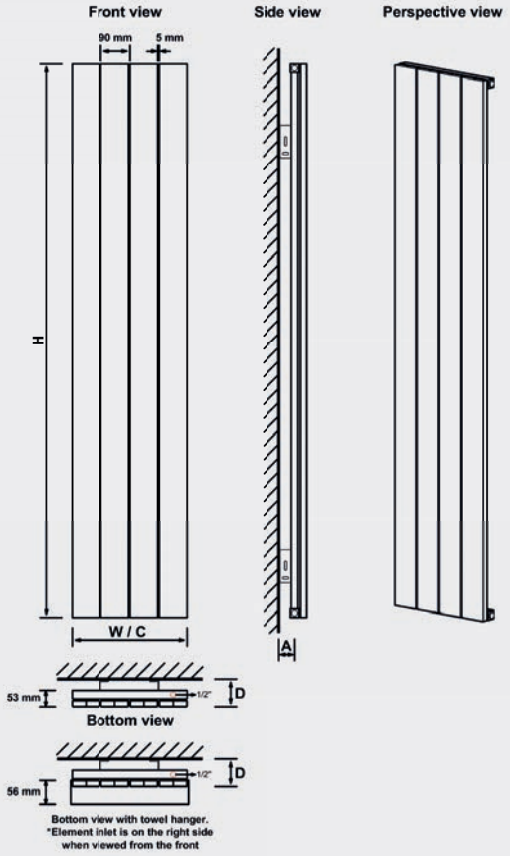

CHARLTON - HORIZONTAL

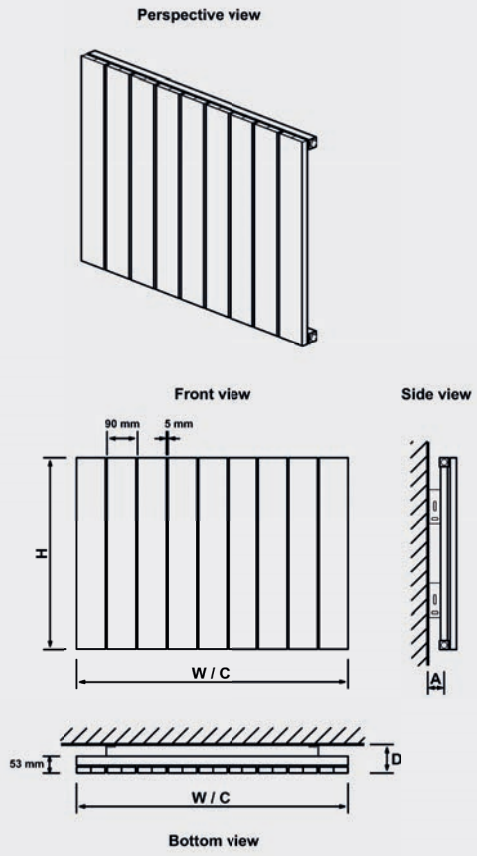

Technical Tables & Drawings

WITHINGTON - ALUMINIUM RANGE

Withington - Vertical

Height H (mm)	Width W (mm)	Tappings C (mm)	Distance from wall - D (mm)	Tappings from wall - A (mm)	Tube Qty	Water Content L	Weight KG	Colour	▲T60 Watts	▲T60 BTU	Element Output	Element Type
600	280	280	71/91	33/53	3	0.60	3.75	Coloured	305	1041	150W	A, A+, F, G
1200	280	280	71/91	33/53	3	1.20	4.30	Coloured	559	1908	300W	A, A+, F, G
1200	375	375	71/91	33/53	4	1.60	5.80	Coloured	742	2532	300W	A, A+, F, G
1200	470	470	71/91	33/53	5	2.00	7.30	Coloured	922	3146	450W	A, A+, F, G
1200	565	565	71/91	33/53	6	2.40	8.80	Coloured	1101	3757	600W	A, A+, F, G
1800	280	280	71/91	33/53	3	1.80	8.00	Coloured	812	2771	450W	A, A+, F, G
1800	375	375	71/91	33/53	4	2.40	10.20	Coloured	1076	3672	600W	A, A+, F, G
1800	470	470	71/91	33/53	5	3.00	12.70	Coloured	1338	4566	750W	A, A+, F, G
1800	565	565	71/91	33/53	6	3.50	14.80	Coloured	1598	5453	1000W	A, A+, F, G

Withington - Horizontal

Height H (mm)	Width W (mm)	Tappings C (mm)	Distance from wall - D (mm)	Tappings from wall - A (mm)	Tube Qty	Water Content L	Weight KG	Colour	▲T60 Watts	▲T60 BTU	Element Output	Element Type
600	470	470	71/91	33/53	5	1.10	5.70	Coloured	502	1713	300W	A, A+, C, H
600	660	660	71/91	33/53	7	1.50	7.80	Coloured	697	2379	450W	A, A+, C, H
600	850	850	71/91	33/53	9	2.00	9.50	Coloured	889	3034	600W	A, A+, C, H
600	1040	1040	71/91	33/53	11	2.40	11.50	Coloured	1080	3685	750W	A, A+, C, H
600	1230	1230	71/91	33/53	13	2.90	13.50	Coloured	1270	4334	900W	A, A+, C, H
600	1420	1420	71/91	33/53	15	3.30	13.00	Coloured	1459	4979	900W	A, A+, C, H

MALMESBURY - ALUMINIUM RANGE

Malmesbury - Vertical

Height H (mm)	Width W (mm)	Tappings C (mm)	Distance from wall - D (mm)	Tappings from wall - A (mm)	Tube Qty	Water Content L	Weight KG	Colour	▲T60 Watts	▲T60 BTU	Element Output	Element Type
1200	185	185	71/91	33/53	2	0.80	2.90	Coloured	375	1280	150W	A, A+, F, G
1200	280	280	71/91	33/53	3	1.20	4.40	Coloured	554	1891	300W	A, A+, F, G
1200	375	375	71/91	33/53	4	1.60	5.70	Coloured	730	2491	300W	A, A+, F, G
1200	470	470	71/91	33/53	5	2.00	7.30	Coloured	903	3082	450W	A, A+, F, G
1200	565	565	71/91	33/53	6	2.40	8.30	Coloured	1074	3665	600W	A, A+, F, G
1800	185	185	71/91	33/53	2	1.18	5.6	Coloured	544	1857	300W	A, A+, F, G
1800	280	280	71/91	33/53	3	1.80	7.9	Coloured	804	2744	450W	A, A+, F, G
1800	375	375	71/91	33/53	4	2.40	10.1	Coloured	1060	3617	600W	A, A+, F, G
1800	470	470	71/91	33/53	5	3.00	12.6	Coloured	1311	4474	750W	A, A+, F, G
1800	565	565	71/91	33/53	6	3.50	13.80	Coloured	1560	5323	1000W	A, A+, F, G

Malmesbury - Horizontal

Height H (mm)	Width W (mm)	Tappings C (mm)	Distance from wall - D (mm)	Tappings from wall - A (mm)	Tube Qty	Water Content L	Weight KG	Colour	▲T60 Watts	▲T60 BTU	Element Output	Element Type
500	375	375	79/99	33/53	4	0.94	4.3	Coloured	340	1161	150W	A, A+, C, H
500	470	470	79/99	33/53	5	1.18	5.1	Coloured	421	1437	150W	A, A+, C, H
500	565	565	79/99	33/53	6	1.41	6.0	Coloured	500	1706	300W	A, A+, C, H
600	375	375	79/99	33/53	4	1.75	4.6	Coloured	397	1355	150W	A, A+, C, H
600	470	470	79/99	33/53	5	2.17	5.7	Coloured	491	1676	300W	A, A+, C, H
600	565	565	79/99	33/53	6	2.50	6.6	Coloured	585	1997	300W	A, A+, C, H
600	850	850	79/99	33/53	9	3.75	9.5	Coloured	859	2931	450W	A, A+, C, H
600	1040	1040	79/99	33/53	11	4.58	11.3	Coloured	1039	3546	600W	A, A+, C, H
600	1230	1230	79/99	33/53	13	5.42	13.0	Coloured	1217	4153	750W	A, A+, C, H
600	1420	1420	79/99	33/53	15	3.30	12.6	Coloured	1394	4757	900W	A, A+, C, H



Withington
Vertical



Withington
Horizontal



Malmesbury
Vertical



Malmesbury
Horizontal

Technical Tables & Drawings

WITHINGTON - VERTICAL

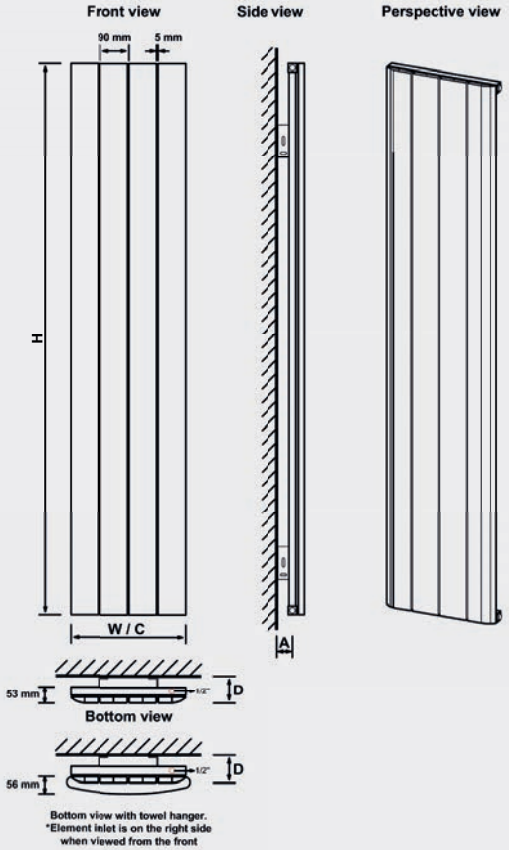

WITHINGTON - HORIZONTAL

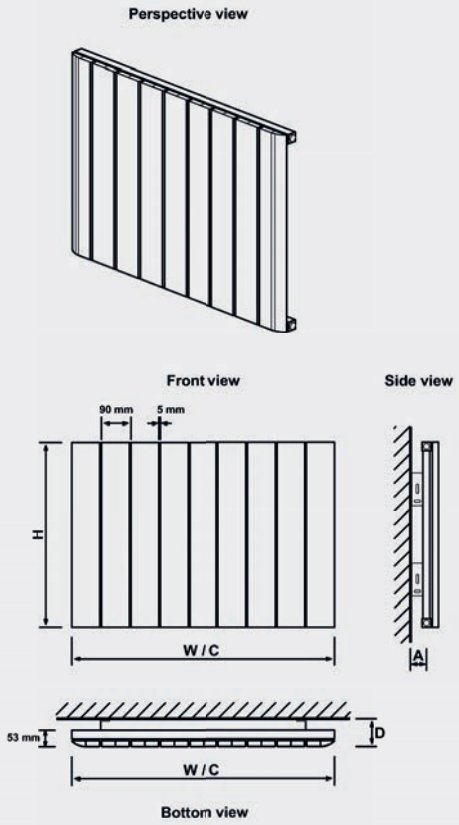

MALMESBURY - VERTICAL

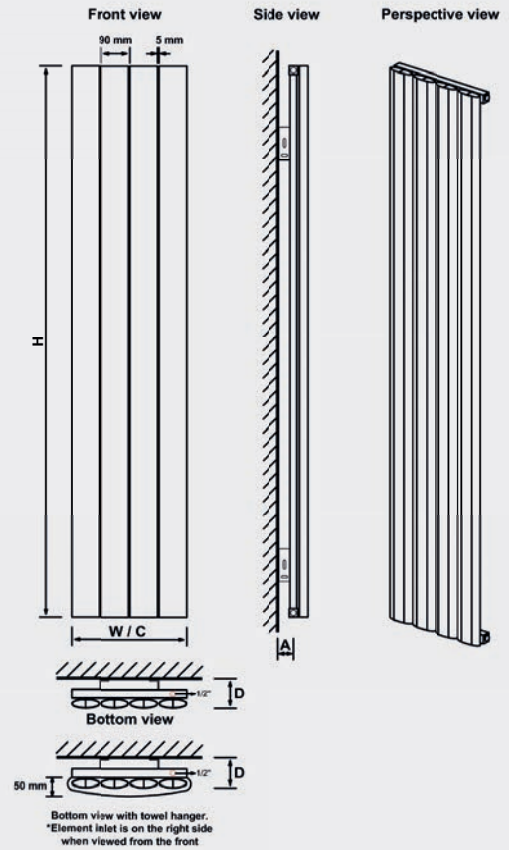

MALMESBURY - HORIZONTAL

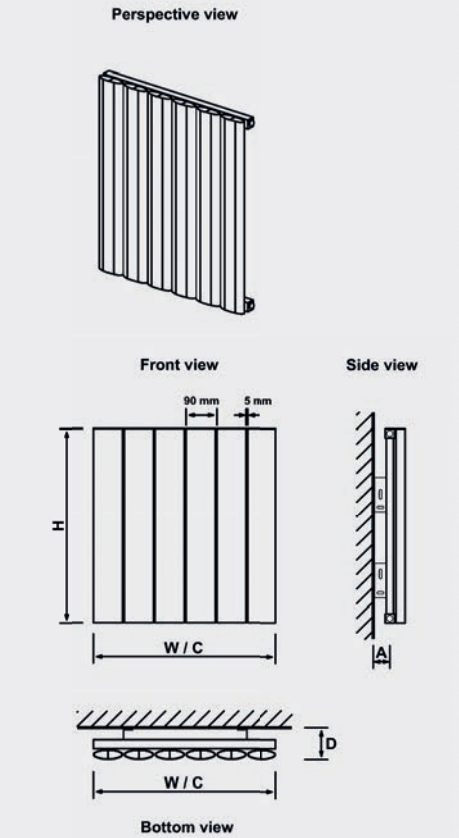

Technical Tables & Drawings

ADDINGTON ALUMINIUM - DESIGNER RANGE

Addington Aluminium Type10 - Vertical / Horizontal

Height H (mm)	Width W (mm)	Tappings C (mm)	Distance from wall - D (mm)	Tappings from wall - A (mm)	Tube Qty	Water Content L	Weight KG	Colour	▲T60 Watts	▲T60 BTU	Element Output	Element Type
500	514	514	76.5	45	7	1.14	5.83	Coloured	443	1512	150W	A
500	588	588	76.5	45	8	1.30	6.66	Coloured	507	1728	150W	A
600	292	292	76.5	45	4	0.76	3.81	Coloured	315	1074	150W	A
600	366	366	76.5	45	5	0.96	4.60	Coloured	393	1342	150W	A
600	440	440	76.5	45	6	1.15	5.66	Coloured	472	11610	150W	A
600	514	514	76.5	45	7	1.34	6.42	Coloured	551	1879	300W	A
600	588	588	76.5	45	8	1.53	7.39	Coloured	629	2147	300W	A
600	662	662	76.5	45	9	1.72	8.26	Coloured	708	2416	300W	A
600	810	810	76.5	45	11	2.10	10.10	Coloured	865	2952	300W	A
600	1032	1032	76.5	45	14	2.67	12.86	Coloured	1101	3758	600W	A
600	1180	1180	76.5	45	16	3.06	15.10	Coloured	1259	4294	600W	A
600	1254	1254	76.5	45	17	3.25	15.96	Coloured	1337	4563	600W	A
800	514	514	76.5	45	7	1.74	8.02	Coloured	709	2420	300W	A
800	588	588	76.5	45	8	1.98	9.16	Coloured	811	2766	300W	A
1000	514	514	76.5	45	7	2.13	9.43	Coloured	862	2940	300W	A
1000	588	588	76.5	45	8	2.43	10.74	Coloured	985	3360	300W	A
1200	514	514	76.5	45	7	2.53	10.72	Coloured	1010	3446	300W	A
1200	588	588	76.5	45	8	2.89	12.23	Coloured	1154	3938	600W	A
1400	514	514	76.5	45	7	2.93	12.13	Coloured	1154	3937	600W	A
1400	588	588	76.5	45	8	3.34	13.88	Coloured	1319	4499	600W	A
1800	292	292	76.5	45	4	2.12	8.65	Coloured	816	2786	600W	A
1800	366	366	76.5	45	5	2.66	10.19	Coloured	1021	3482	600W	A
1800	440	440	76.5	45	6	3.19	12.85	Coloured	1225	4179	600W	A
1800	514	514	76.5	45	7	3.72	15.05	Coloured	1429	4875	900W	A
1800	588	588	76.5	45	8	4.25	17.09	Coloured	1633	5572	900W	A

Addington Aluminium Type20 - Vertical / Horizontal

Height H (mm)	Width W (mm)	Tappings C (mm)	Distance from wall - D (mm)	Tappings from wall - A (mm)	Tube Qty	Water Content L	Weight KG	Colour	▲T60 Watts	▲T60 BTU	Element Output	Element Type
600	292	292	96.5	65	8	0.76	5.09	Coloured	442	1509	150W	A
600	366	366	96.5	65	10	0.96	6.34	Coloured	553	1887	300W	A
600	440	440	96.5	65	12	1.15	7.53	Coloured	664	2264	300W	A
600	514	514	96.5	65	14	1.34	8.54	Coloured	774	2641	300W	A
600	588	588	96.5	65	16	1.53	9.79	Coloured	885	3019	300W	A
600	662	662	96.5	65	18	1.72	11.34	Coloured	995	3396	300W	A
600	810	810	96.5	65	22	2.10	13.42	Coloured	1216	4151	600W	A
600	1032	1032	96.5	65	28	2.67	17.53	Coloured	1548	5283	600W	A
600	1180	1180	96.5	65	32	3.06	19.49	Coloured	1769	6038	900W	A
600	1254	1254	96.5	65	34	3.25	20.68	Coloured	1880	6415	900W	A
1800	366	366	96.5	65	10	2.66	15.89	Coloured	1435	4896	600W	A
1800	440	440	96.5	65	12	3.19	18.82	Coloured	1722	5875	900W	A
1800	514	514	96.5	65	14	3.72	21.94	Coloured	2009	6854	900W	A
1800	588	588	96.5	65	16	4.25	25.18	Coloured	2296	7834	900W	A



Addington Aluminium Type 10 Horizontal



Addington Aluminium Type 10 Vertical



Addington Aluminium Type 20 Horizontal



Addington Aluminium Type 20 Vertical

Technical Tables & Drawings

ADDINGTON ALUMINIUM TYPE 10 HORIZONTAL

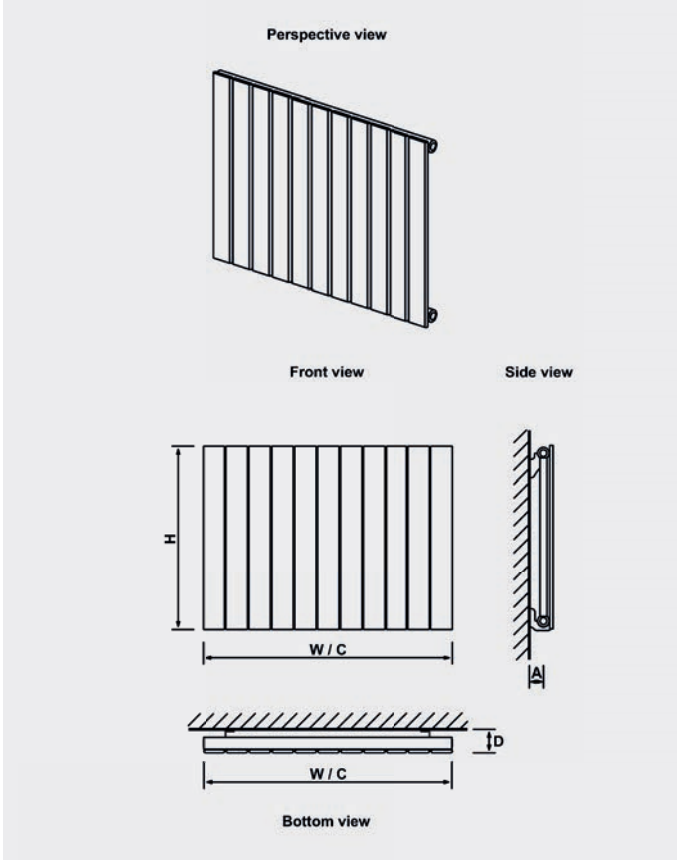

ADDINGTON ALUMINIUM TYPE 10 VERTICAL

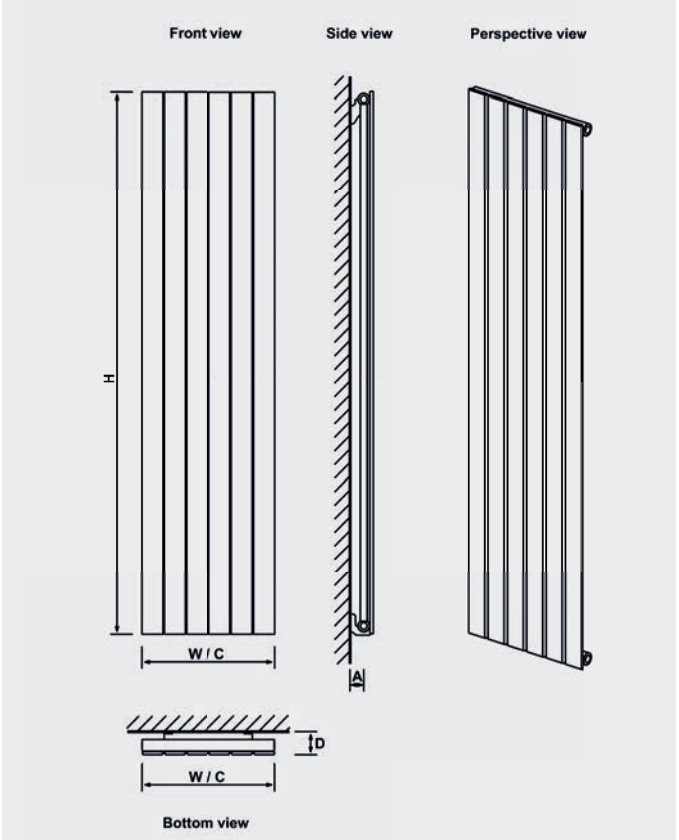

ADDINGTON ALUMINIUM TYPE 20 HORIZONTAL

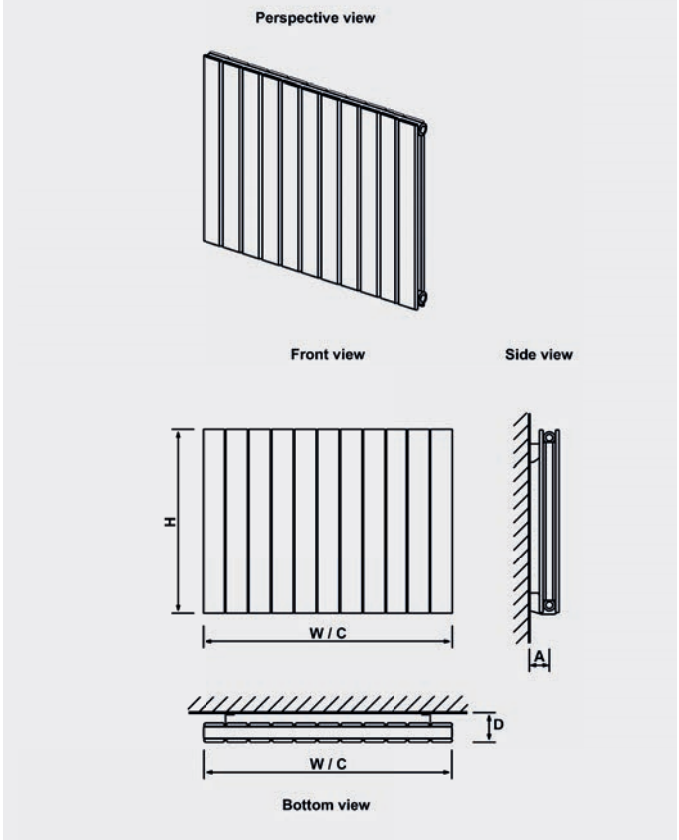

ADDINGTON ALUMINIUM TYPE 20 VERTICAL

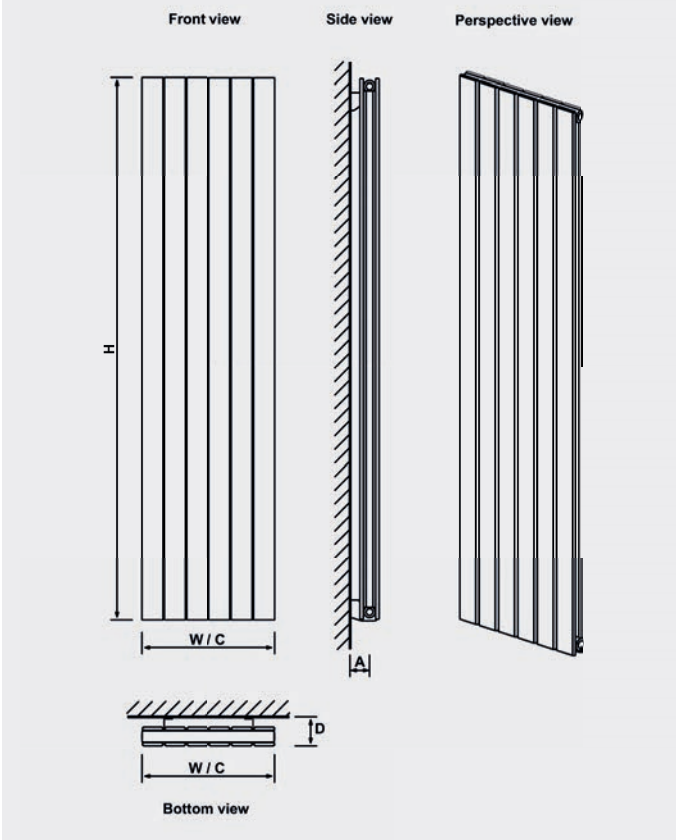

Technical Tables & Drawings

ROSANO - ALUMINIUM RANGE

Rosano - Vertical

Height H (mm)	Width W (mm)	Tappings C1 / C2* (mm)	Distance from wall - D (mm)	Tappings from wall - A (mm)	Tube Qty	Water Content L	Weight KG	Colour	▲T60 Watts	▲T60 BTU	Element Output	Element Type
600	280	280/190	70/90	35/55	3	0.58	4.6	Coloured	316	1078	150W	A, A+
1800	280	280/190	70/90	35/55	3	1.75	10.0	Coloured	948	3235	450W	A, A+
1800	375	375/285	70/90	35/55	4	2.33	13.1	Coloured	1264	4313	750W	A, A+
1800	470	470/380	70/90	35/55	5	2.91	16.2	Coloured	1580	5391	900W	A, A+
1800	565	565/475	70/90	35/55	6	3.52	19.50	Coloured	1896	6469	1000W	A, A+

* Tappings C1 : Side connection, Tappings C2 : Bottom connection.

Rosano - Horizontal

Height H (mm)	Width W (mm)	Tappings C (mm)	Distance from wall - D (mm)	Tappings from wall - A (mm)	Tube Qty	Water Content L	Weight KG	Colour	▲T60 Watts	▲T60 BTU	Element Output	Element Type
600	470	470	70/90	35/55	5	0.96	6.7	Coloured	555	1894	300W	A, A+, C, H
600	660	660	70/90	35/55	7	1.34	9.1	Coloured	777	2651	450W	A, A+, C, H
600	850	850	70/90	35/55	9	1.73	11.5	Coloured	999	3409	600W	A, A+, C, H
600	1040	1040	70/90	35/55	11	2.11	13.9	Coloured	1221	4166	750W	A, A+, C, H
600	1230	1230	70/90	35/55	13	2.50	16.3	Coloured	1443	4924	900W	A, A+, C, H

PERETTI - ALUMINIUM RANGE

Peretti - Vertical

Height H (mm)	Width W (mm)	Tappings C1 / C2** (mm)	Distance from wall - D (mm)	Tappings from wall - A (mm)	Tube Qty	Water Content L	Weight KG	Colour	▲T60 Watts	▲T60 BTU	Element Output	Element Type
600	280	280/190	70/90	35/55	3	0.58	4.6	Coloured	316	1078	150W	A, A+
1800	280	280/190	70/90	35/55	3	1.75	10.0	Coloured	948	3235	450W	A, A+
1800	375	375/285	70/90	35/55	4	2.33	13.1	Coloured	1264	4313	750W	A, A+
1800	470	470/380	70/90	35/55	5	2.91	16.2	Coloured	1580	5391	900W	A, A+
1800	565	565/475	70/90	35/55	6	3.52	19.50	Coloured	1896	6469	1000W	A, A+

* Polished Aluminium heat outputs approx 3% lower than the coloured models.

** Tappings C1 : Side connection, Tappings C2 : Bottom connection.

Peretti - Horizontal

Height H (mm)	Width W (mm)	Tappings C (mm)	Distance from wall - D (mm)	Tappings from wall - A (mm)	Tube Qty	Water Content L	Weight KG	Colour	▲T60 Watts	▲T60 BTU	Element Output	Element Type
600	470	470	70/90	35/55	5	0.96	6.7	Coloured	555	1894	300W	A, A+, C, H
600	660	660	70/90	35/55	7	1.34	9.1	Coloured	777	2651	450W	A, A+, C, H
600	850	850	70/90	35/55	9	1.73	11.5	Coloured	999	3409	600W	A, A+, C, H
600	1040	1040	70/90	35/55	11	2.11	13.9	Coloured	1221	4166	750W	A, A+, C, H
600	1230	1230	70/90	35/55	13	2.50	16.3	Coloured	1443	4924	900W	A, A+, C, H

* Polished Aluminium heat outputs approx 3% lower than the coloured models.



Rosano
Vertical



Rosano
Horizontal



Peretti
Vertical



Peretti
Horizontal

Technical Tables & Drawings

ROSANO - VERTICAL

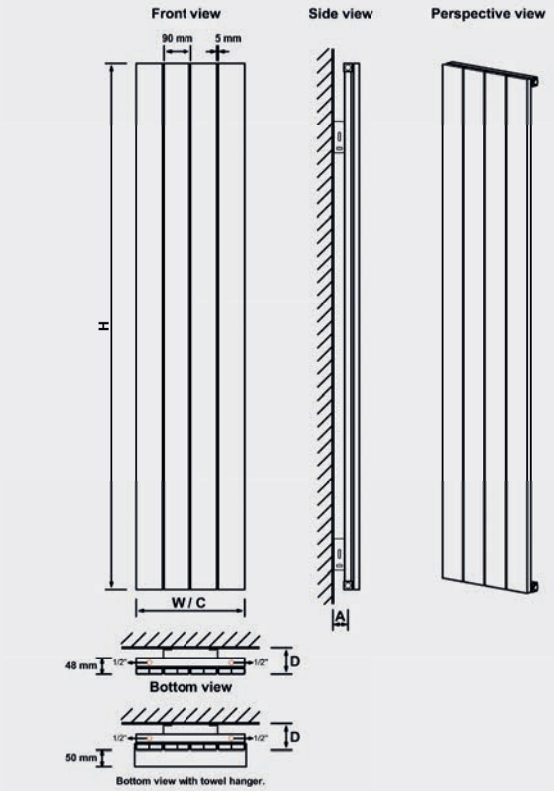

ROSANO - HORIZONTAL

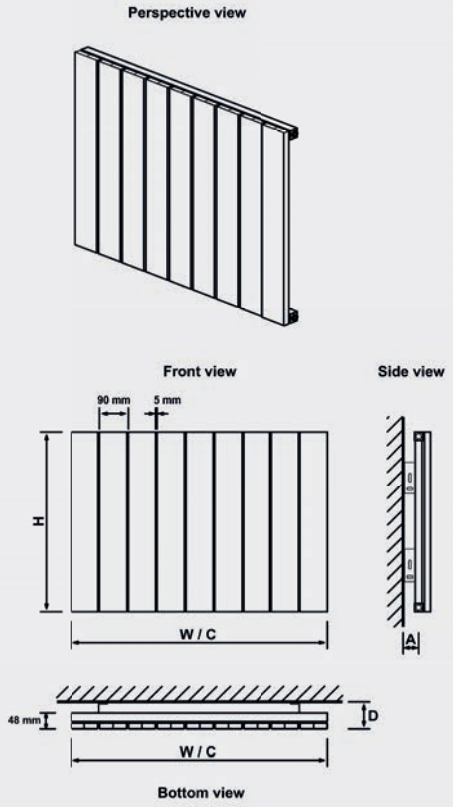

PERETTI - VERTICAL

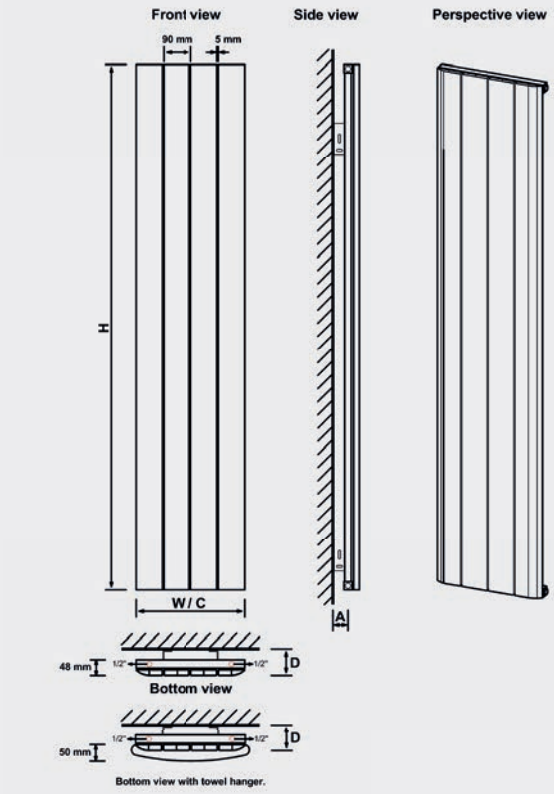

PERETTI - HORIZONTAL

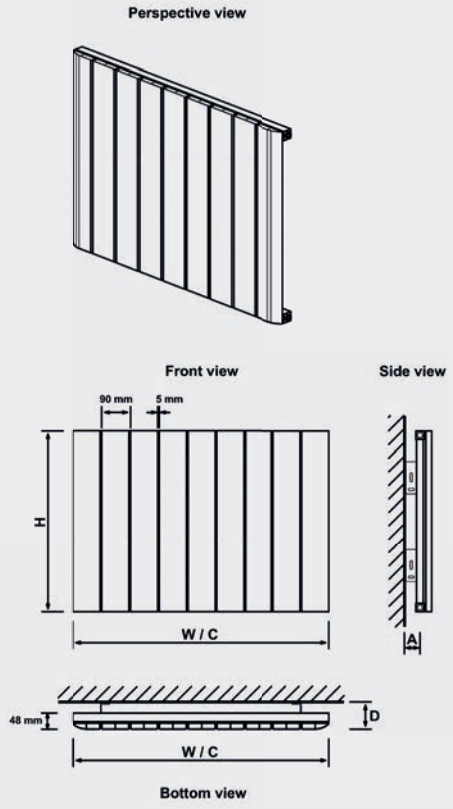

Technical Tables & Drawings

SANDHURST - ALUMINIUM RANGE

Sandhurst - Vertical

Height H (mm)	Width W (mm)	Tappings C1 / C2** (mm)	Distance from wall - D (mm)	Tappings from wall - A (mm)	Tube Qty	Water Content L	Weight KG	Colour	▲T60 Watts	▲T60 BTU	Element Output	Element Type
1800	275	275/210	105	65	4	1.60	7.50	Coloured	901	3074	450W	A, A+
1800	415	415/350	105	65	6	2.40	11.20	Coloured	1351	4611	750W	A, A+
1800	485	485/420	105	65	7	2.80	13.10	Coloured	1577	5380	900W	A, A+

* Polished Aluminium heat outputs approx. 3% lower than the coloured models.

** Tappings C1 : Side connection, Tappings C2 : Bottom connection.

Sandhurst - Horizontal

Height H (mm)	Width W (mm)	Tappings C (mm)	Distance from wall - D (mm)	Tappings from wall - A (mm)	Tube Qty	Water Content L	Weight KG	Colour	▲T60 Watts	▲T60 BTU	Element Output	Element Type
600	485	485	105	65	7	1.12	12.40	Coloured	526	1793	300W	A, A+
600	625	625	105	65	9	1.44	15.90	Coloured	676	2306	300W	A, A+
600	835	835	105	65	12	1.91	21.20	Coloured	901	3074	450W	A, A+
600	1045	1045	105	65	15	2.39	26.50	Coloured	1126	3843	600W	A, A+
600	1255	1255	105	65	18	2.86	31.80	Coloured	1351	4611	750W	A, A+

BERKELEY - ALUMINIUM RANGE

Berkeley - Horizontal

Height H (mm)	Width W (mm)	Tappings C (mm)	Distance from wall - D (mm)	Tappings from wall - A (mm)	Tube Qty	Water Content L	Weight KG	Colour	▲T60 Watts	▲T60 BTU	Element Output	Element Type
603	600	600	70	50	6	1.30	5.70	Coloured	425	1451	N/A	N/A
603	800	800	70	50	6	1.70	5.80	Coloured	558	1904	N/A	N/A
603	1000	1000	70	50	6	2.00	6.33	Coloured	690	2355	N/A	N/A
603	1200	1200	70	50	6	2.40	7.22	Coloured	820	2798	N/A	N/A
603	1400	1400	70	50	6	2.80	8.80	Coloured	949	3238	N/A	N/A
603	1600	1600	70	50	6	3.10	9.60	Coloured	1077	3675	N/A	N/A
603	1800	1800	70	50	6	3.50	10.50	Coloured	1204	4109	N/A	N/A
603	2000	2000	70	50	6	3.80	11.30	Coloured	1330	4538	N/A	N/A

TORDINO - ALUMINIUM RANGE

Tordino - Vertical

Height H (mm)	Width W (mm)	Tappings C (mm)	Distance from wall - D (mm)	Tappings from wall - A (mm)	Tube Qty	Water Content L	Weight KG	Colour	▲T60 Watts	▲T60 BTU	Element Output	Element Type
1800	280	280	80/100	31/51	3	1.70	6.50	Coloured	864	2948	450W	A, A+, F, G
1800	375	375	80/100	31/51	4	2.30	8.60	Coloured	1149	3921	600W	A, A+, F, G
1800	470	470	80/100	31/51	5	2.90	10.40	Coloured	1432	4886	750W	A, A+, F, G
1800	565	565	80/100	31/51	6	3.50	12.50	Coloured	1713	5845	1000W	A, A+, F, G



Sandhurst
Vertical



Sandhurst
Horizontal



Berkeley
Horizontal



Tordino
Vertical

Technical Tables & Drawings

SANDHURST - VERTICAL

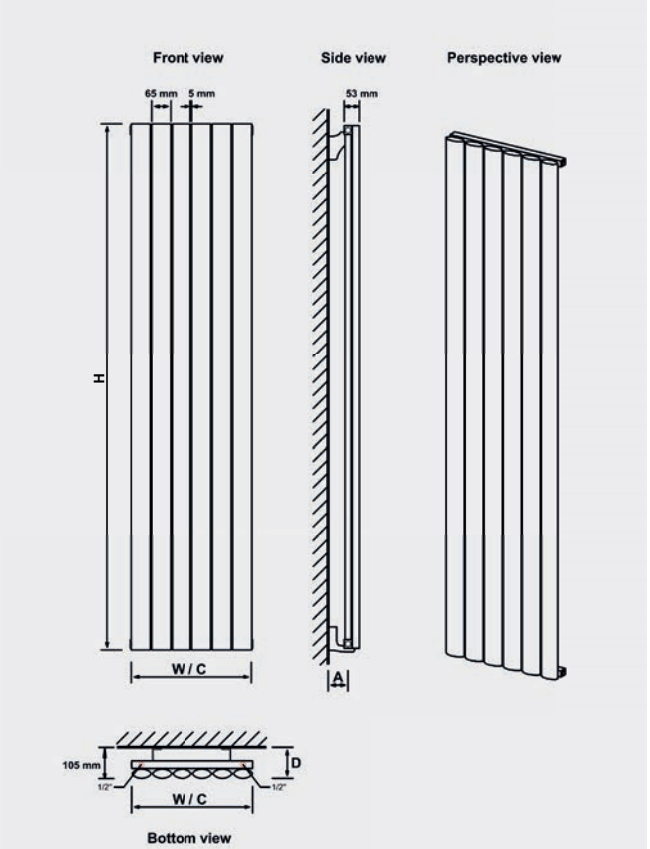

SANDHURST - HORIZONTAL

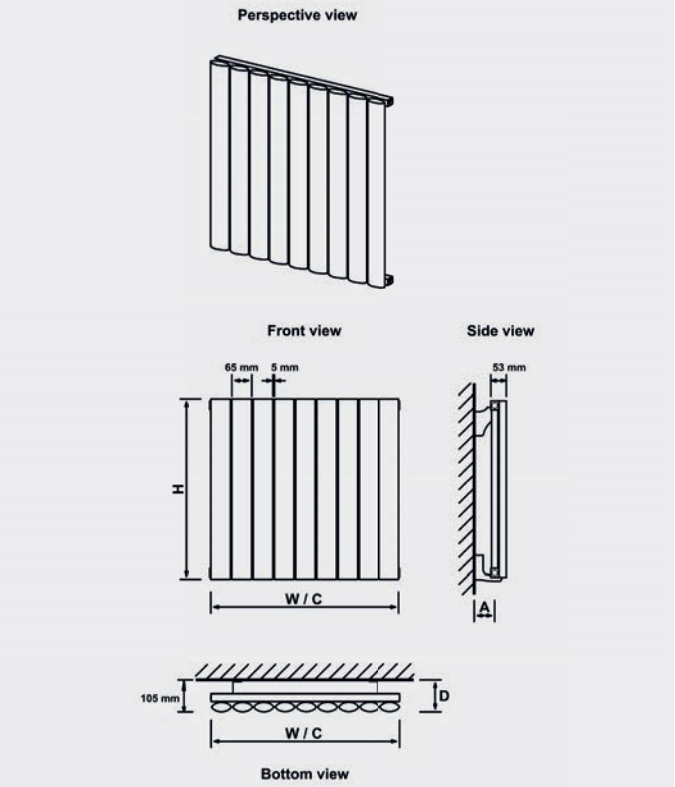

BERKELEY - HORIZONTAL

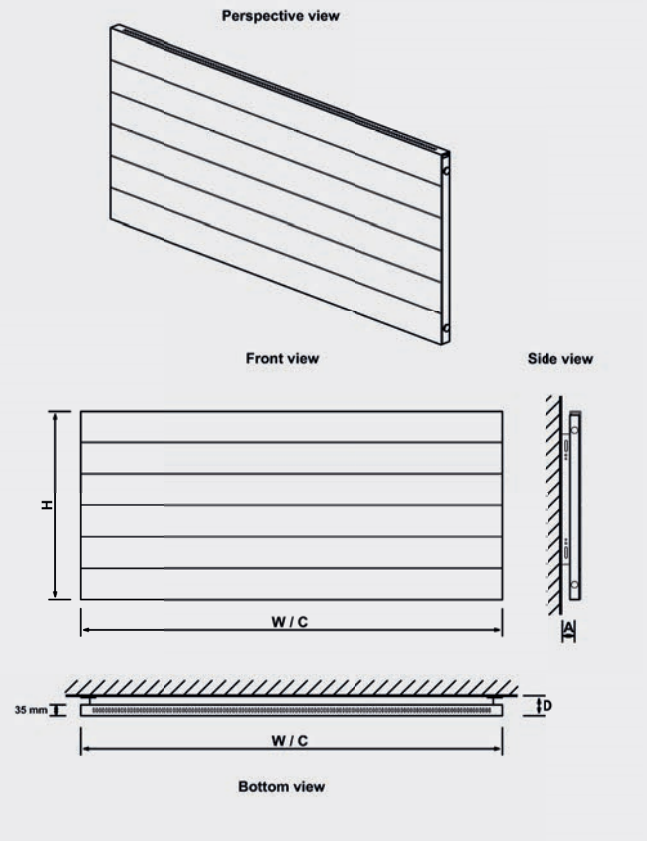

TORDINO - VERTICAL

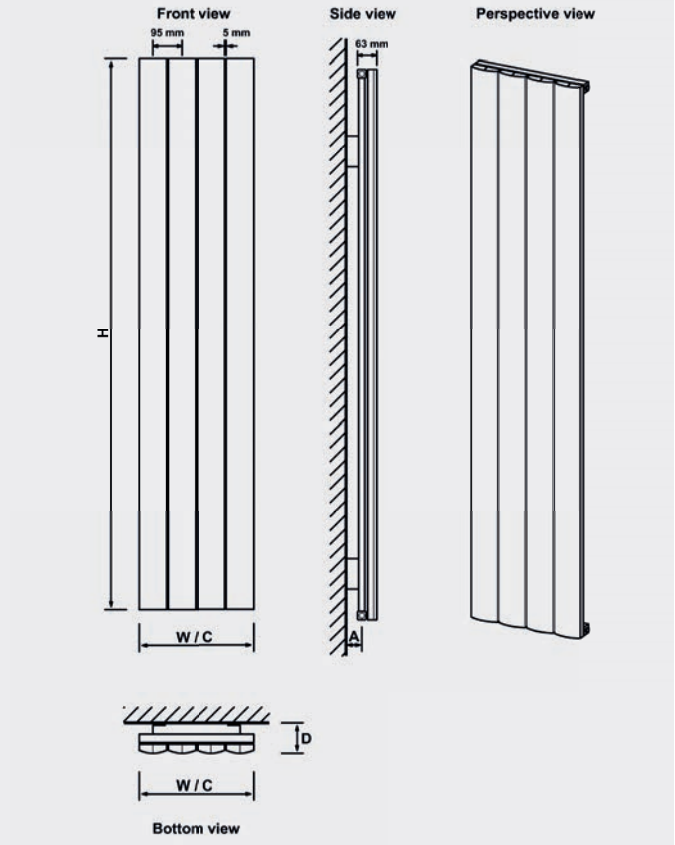

Technical Tables & Drawings

TORDINO - ALUMINIUM RANGE

Tordino - Horizontal

Height H (mm)	Width W (mm)	Tappings C (mm)	Distance from wall - D (mm)	Tappings from wall - A (mm)	Tube Qty	Water Content L	Weight KG	Colour	▲T60 Watts	▲T60 BTU	Element Output	Element Type
600	470	470	80/100	31/51	5	1.10	4.30	Coloured	520	1775	300W	A, A+, C, H
600	660	660	80/100	31/51	7	1.50	6.00	Coloured	724	2471	450W	A, A+, C, H
600	850	850	80/100	31/51	9	2.00	7.80	Coloured	927	3163	600W	A, A+, C, H
600	1040	1040	80/100	31/51	11	2.40	9.50	Coloured	1129	3853	750W	A, A+, C, H
600	1230	1230	80/100	31/51	13	2.80	11.20	Coloured	1329	4535	900W	A, A+, C, H

GUARDIA - ALUMINIUM RANGE

Guardia - Vertical

Height H (mm)	Width W (mm)	Tappings C (mm)	Distance from wall - D (mm)	Tappings from wall - A (mm)	Tube Qty	Water Content L	Weight KG	Colour	▲T60 Watts	▲T60 BTU	Element Output	Element Type
1200	280	280	110	65	3	1.14	9.16	Coloured	960	3276	N/A	N/A
1200	375	375	110	65	4	1.52	12.12	Coloured	1280	4367	N/A	N/A
1200	470	470	110	65	5	1.90	15.05	Coloured	1600	5459	N/A	N/A
1200	565	565	110	65	6	2.27	18.24	Coloured	1920	6551	N/A	N/A
1800	280	280	110	65	3	1.75	14.2	Coloured	1368	4668	N/A	N/A
1800	375	375	110	65	4	2.33	18.7	Coloured	1824	6224	N/A	N/A
1800	470	470	110	65	5	2.91	23.1	Coloured	2280	7780	N/A	N/A
1800	565	565	110	65	6	3.50	27.80	Coloured	2736	9335	N/A	N/A

GUARDIA - ALUMINIUM RANGE

Guardia - Horizontal

Height H (mm)	Width W (mm)	Tappings C (mm)	Distance from wall - D (mm)	Tappings from wall - A (mm)	Tube Qty	Water Content L	Weight KG	Colour	▲T60 Watts	▲T60 BTU	Element Output	Element Type
600	470	470	110	65	5	0.96	9.0	Coloured	800	2730	450W	A, A+, C, H
600	660	660	110	65	7	1.34	12.2	Coloured	1120	3822	600W	A, A+, C, H
600	850	850	110	65	9	1.73	15.6	Coloured	1440	4913	750W	A, A+, C, H
600	1040	1040	110	65	11	2.11	19.0	Coloured	1790	6005	1000W	A, A+, H
600	1230	1230	110	65	13	2.50	22.3	Coloured	2080	7097	1200W	A, A+
600	1420	1420	110	65	15	2.88	25.8	Coloured	2400	8190	1200W	A, A+

HADLEIGH - ALUMINIUM RANGE

Hadleigh - Vertical

Height H (mm)	Width W (mm)	Tappings C (mm)	Distance from wall - D (mm)	Tappings from wall - A (mm)	Tube Qty	Water Content L	Weight KG	Colour	▲T60 Watts	▲T60 BTU	Element Output	Element Type
1200	275	275	98	65	4	1.52	9.56	Coloured	779	2658	N/A	N/A
1200	415	415	98	65	6	2.27	14.17	Coloured	1169	3987	N/A	N/A
1200	485	485	98	65	7	2.65	15.82	Coloured	1363	4652	N/A	N/A
1200	555	555	98	65	8	3.03	17.92	Coloured	1558	5316	N/A	N/A
1800	275	275	98	65	4	1.6	12.2	Coloured	1003	3422	N/A	N/A
1800	415	415	98	65	6	2.4	18.3	Coloured	1504	5132	N/A	N/A
1800	485	485	98	65	7	2.8	21.3	Coloured	1755	5988	N/A	N/A
1800	555	555	98	65	8	4.39	26.18	Coloured	2006	6843	N/A	N/A



Tordino
Horizontal



Guardia
Vertical



Guardia
Horizontal

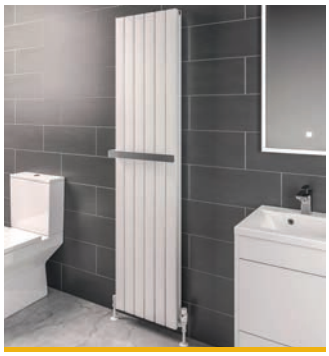

Hadleigh
Vertical

Technical Tables & Drawings

TORDINO - HORIZONTAL

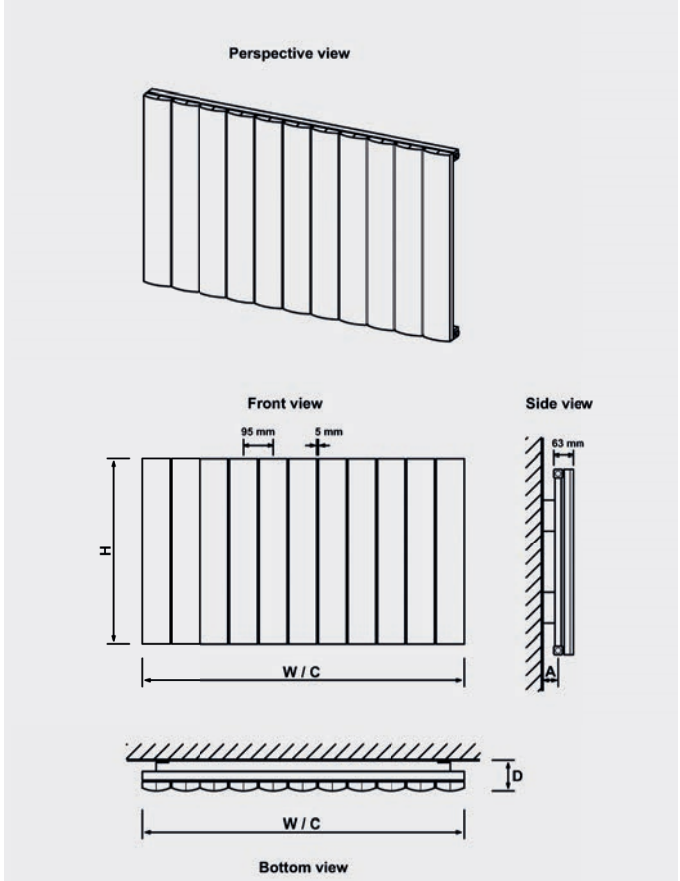

GUARDIA - VERTICAL

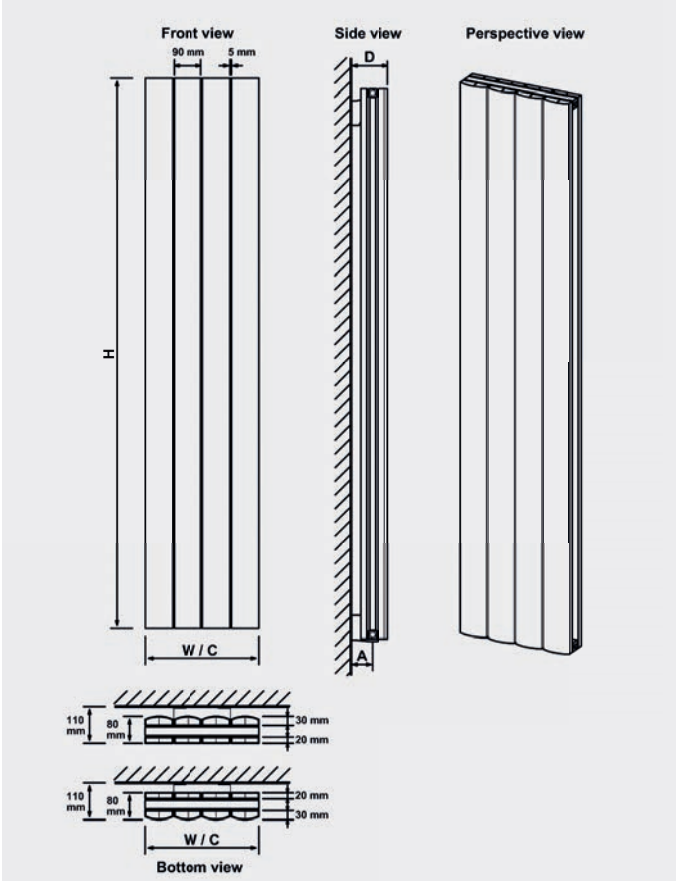

GUARDIA - HORIZONTAL

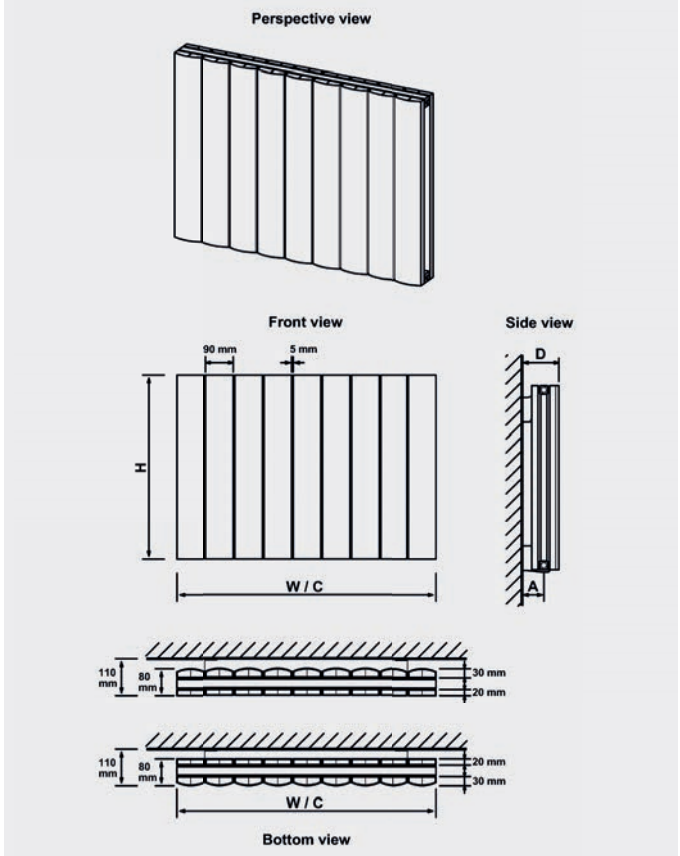

HADLEIGH - VERTICAL

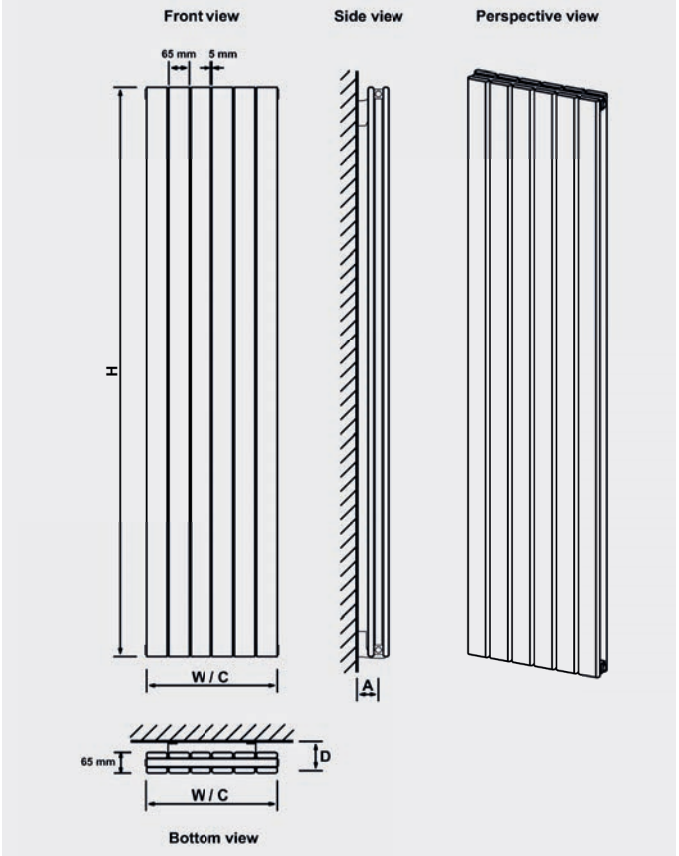

Technical Tables & Drawings

HADLEIGH - ALUMINIUM RANGE

Hadleigh - Horizontal

Height H (mm)	Width W (mm)	Tappings C (mm)	Distance from wall - D (mm)	Tappings from wall - A (mm)	Tube Qty	Water Content L	Weight KG	Colour	▲T60 Watts	▲T60 BTU	Element Output	Element Type
600	485	485	98	65	7	1.12	8.90	Coloured	821	2801	450W	A, A+, C, H
600	625	625	98	65	9	1.44	11.40	Coloured	1055	3601	600W	A, A+, C, H
600	835	835	98	65	12	1.91	15.20	Coloured	1407	4802	750W	A, A+, C, H
600	1045	1045	98	65	15	2.39	19.00	Coloured	1759	6002	1000W	A, A+, C, H
600	1255	1255	98	65	18	2.86	22.80	Coloured	2111	7202	1200W	A, A+, C, H
600	1395	1395	98	65	20	4.18	24.61	Coloured	2345	8003	1200W	A, A+, C, H

VESIMA - ALUMINIUM RANGE

Vesima - Vertical

Height H (mm)	Width W (mm)	Tappings C (mm)	Distance from wall - D (mm)	Tappings from wall - A (mm)	Tube Qty	Water Content L	Weight KG	Colour	▲T60 Watts	▲T60 BTU	Element Output	Element Type
1800	303	303	85/105	60/80	3	1.75	10.90	Coloured	1068	3644	600W	A
1800	403	403	85/105	60/80	4	2.34	14.20	Coloured	1424	4859	900W	A
1800	503	503	85/105	60/80	5	2.92	17.60	Coloured	1780	6074	900W	A
1800	603	603	85/105	60/80	6	3.30	20.99	Coloured	2134	7282	900W	A

Vesima - Horizontal

Height H (mm)	Width W (mm)	Tappings C (mm)	Distance from wall - D (mm)	Tappings from wall - A (mm)	Tube Qty	Water Content L	Weight KG	Colour	▲T60 Watts	▲T60 BTU	Element Output	Element Type
600	503	503	85/105	60/80	5	0.97	7.10	Coloured	660	2252	300W	A, C, H
600	603	603	85/105	60/80	6	1.16	8.40	Coloured	792	2702	300W	A, C, H
600	803	803	85/105	60/80	8	1.55	10.90	Coloured	1056	3603	600W	A, C, H
600	1003	1003	85/105	60/80	10	1.94	13.50	Coloured	1320	4504	600W	A, C, H
600	1203	1203	85/105	60/80	12	2.33	16.10	Coloured	1584	5405	900W	A, C, H
600	1403	1403	85/105	60/80	14	2.93	18.54	Coloured	1844	6293	900W	A, C, H

PRESTON - ALUMINIUM RANGE

Preston - Vertical

Height H (mm)	Width W (mm)	Tappings C (mm)	Distance from wall - D (mm)	Tappings from wall - A (mm)	Tube Qty	Water Content L	Weight KG	Colour	▲T60 Watts	▲T60 BTU	Element Output	Element Type
1200	185	185	71-91	33-53	2	1.20	5.80	Coloured	374	1277	150W	A, A+, F, G
1800	185	185	71-91	33-53	2	1.20	5.60	Coloured	540	1843	300W	A, A+, F, G

BERLINI - ALUMINIUM RANGE

Berlini - Vertical

Height H (mm)	Width W (mm)	Tappings C (mm)	Distance from wall - D (mm)	Tappings from wall - A (mm)	Tube Qty	Water Content L	Weight KG	Colour	▲T60 Watts	▲T60 BTU	Element Output	Element Type
1200	185	185	70/90	35/55	2	0.78	5.60	Coloured	421	1438	150W	A, A+
1800	185	185	70/90	35/55	2	1.16	6.60	Coloured	632	2156	300W	A, A+

*Polished Aluminium heat outputs approx 3% lower than the coloured models.



Hadleigh
Horizontal



Vesima
Vertical



Vesima
Horizontal



Preston
Vertical



Berlini
Vertical

Technical Tables & Drawings

HADLEIGH - HORIZONTAL

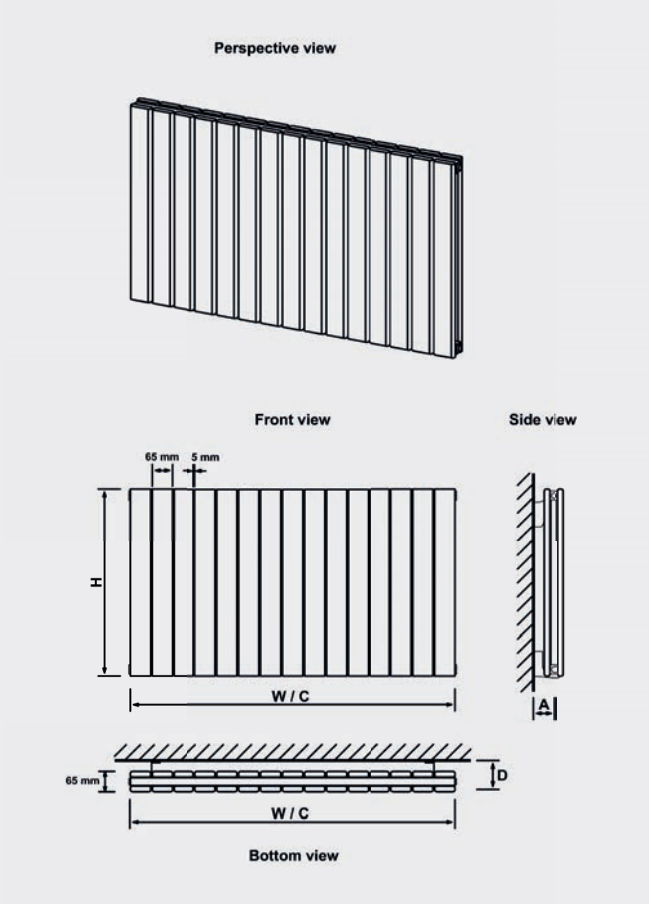

VESIMA - VERTICAL

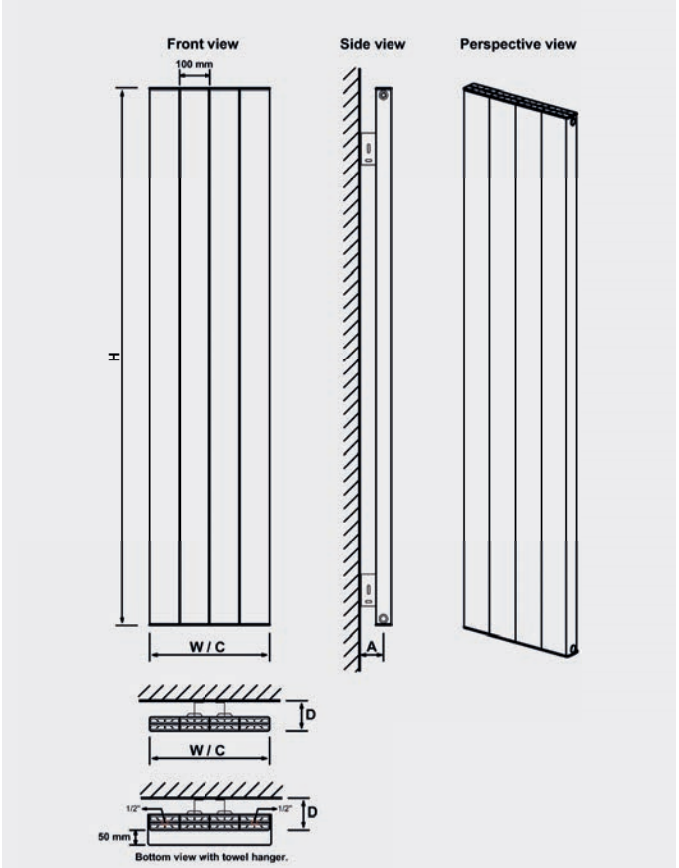

VESIMA - HORIZONTAL

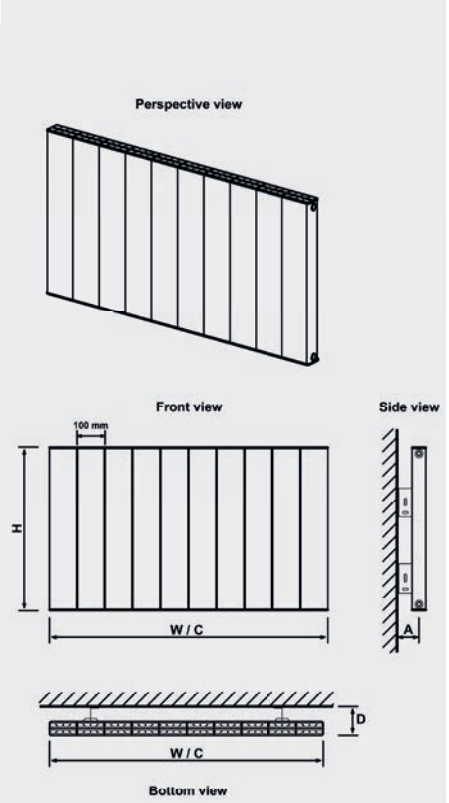

PRESTON - VERTICAL

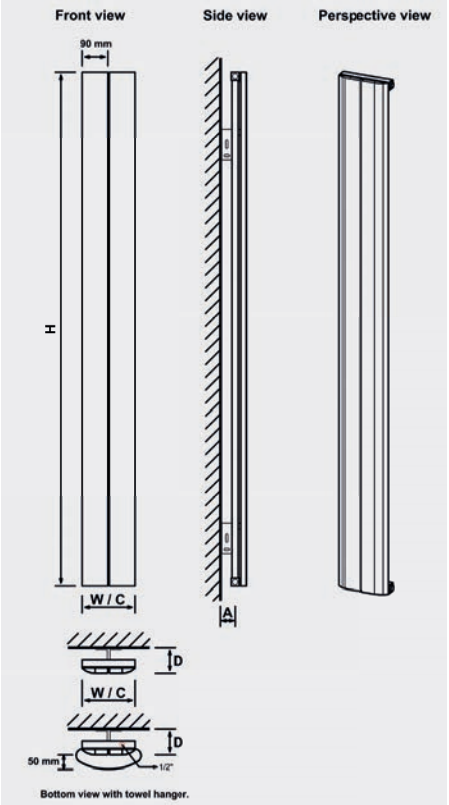

BERLINI - VERTICAL

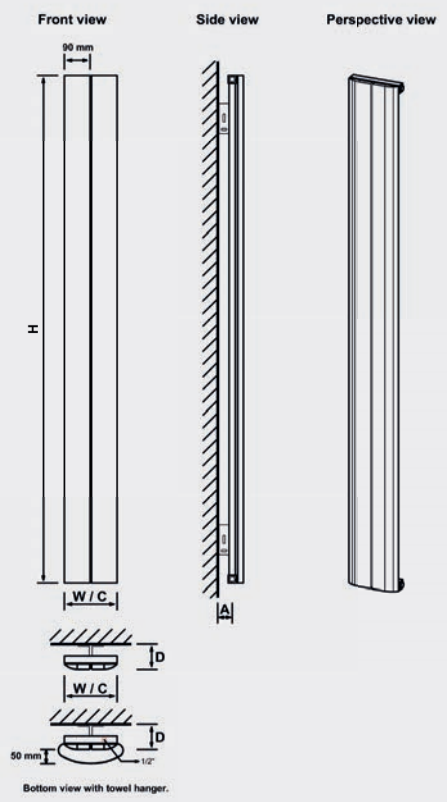

Technical Tables & Drawings

FAIRFORD - ALUMINIUM RANGE

Fairford - Vertical

Height H (mm)	Width W (mm)	Tappings C (mm)	Distance from wall - D (mm)	Tappings from wall - A (mm)	Tube Qty	Water Content L	Weight KG	Colour	▲T60 Watts	▲T60 BTU	Element Output	Element Type
1200	375	375	79/99	33/53	4	1.60	7.20	Coloured	760	2594	450W	A, A+, F, G
1200	565	565	79/99	33/53	6	2.40	11.00	Coloured	1144	3904	750W	A, A+, F, G
1800	375	375	79/99	33/53	4	2.33	9.90	Coloured	1140	3890	750W	A, A+, F, G
1800	565	565	79/99	33/53	6	3.50	13.80	Coloured	1716	5855	1000W	A, A+, F, G

Fairford - Horizontal

Height H (mm)	Width W (mm)	Tappings C (mm)	Distance from wall - D (mm)	Tappings from wall - A (mm)	Tube Qty	Water Content L	Weight KG	Colour	▲T60 Watts	▲T60 BTU	Element Output	Element Type
600	375	375	79/99	33/53	4	0.87	4.50	Coloured	392	1338	300W	A, A+
600	565	565	79/99	33/53	6	1.30	6.70	Coloured	591	2017	300W	A, A+, C, H
600	945	945	79/99	33/53	10	2.18	10.10	Coloured	987	3368	600W	A, A+, C, H
600	1325	1325	79/99	33/53	14	3.06	13.90	Coloured	1382	4716	900W	A, A+, C, H

BURFORD - ALUMINIUM RANGE

Burford - Vertical

Height H (mm)	Width W (mm)	Tappings C (mm)	Distance from wall - D (mm)	Tappings from wall - A (mm)	Tube Qty	Water Content L	Weight KG	Colour	▲T60 Watts	▲T60 BTU	Element Output	Element Type
1800	275	275	108/128	33/53	4	2.28	10.4	Coloured	972	3317	600W	A, A+, F, G
1800	345	345	108/128	33/53	5	2.85	12.9	Coloured	1209	4126	750W	A, A+, F, G
1800	415	415	108/128	33/53	6	3.42	15.3	Coloured	1443	4924	900W	A, A+, F, G
1800	485	485	108/128	33/53	7	3.99	17.7	Coloured	1676	5719	1000W	A, A+, F, G

Burford - Horizontal

Height H (mm)	Width W (mm)	Tappings C (mm)	Distance from wall - D (mm)	Tappings from wall - A (mm)	Tube Qty	Water Content L	Weight KG	Colour	▲T60 Watts	▲T60 BTU	Element Output	Element Type
600	485	485	108/128	33/53	7	1.43	7.3	Coloured	606	2068	300W	A, A+, C, H
600	625	625	108/128	33/53	9	1.84	9.2	Coloured	772	2635	450W	A, A+, C, H
600	835	835	108/128	33/53	12	2.45	12.0	Coloured	1020	3481	600W	A, A+, C, H
600	1045	1045	108/128	33/53	15	3.07	14.8	Coloured	1265	4317	750W	A, A+, C, H
600	1185	1185	108/128	33/53	17	3.47	16.7	Coloured	1427	4869	900W	A, A+, C, H

KELMSCOTT - ALUMINIUM RANGE

Kelmscott - Vertical

Height H (mm)	Width W (mm)	Tappings C (mm)	Distance from wall - D (mm)	Tappings from wall - A (mm)	Tube Qty	Water Content L	Weight KG	Colour	▲T60 Watts	▲T60 BTU	Element Output	Element Type
1800	275	275	83/103	33/53	4	2.28	8.2	Coloured	957	3266	600W	A, A+, F, G
1800	345	345	83/103	33/53	5	2.85	10.1	Coloured	1195	4078	750W	A, A+, F, G
1800	415	415	83/103	33/53	6	3.42	12.0	Coloured	1431	4883	900W	A, A+, F, G
1800	485	485	83/103	33/53	7	3.99	13.8	Coloured	1666	5685	1000W	A, A+, F, G



Fairford Vertical



Fairford Horizontal



Burford Vertical



Burford Horizontal



Kelmscott Vertical

Technical Tables & Drawings

FAIRFORD - VERTICAL

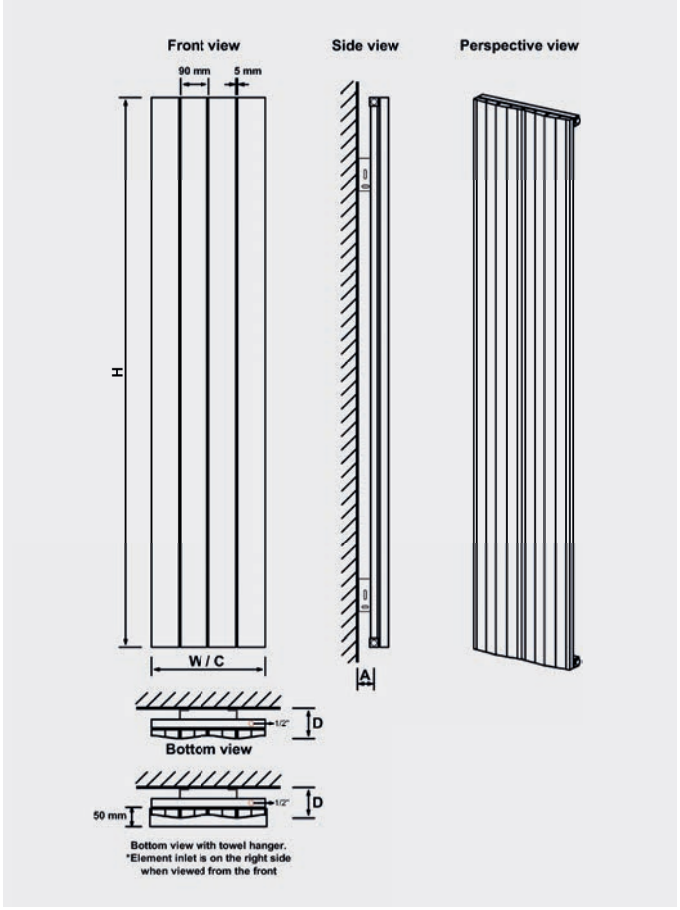

FAIRFORD - HORIZONTAL

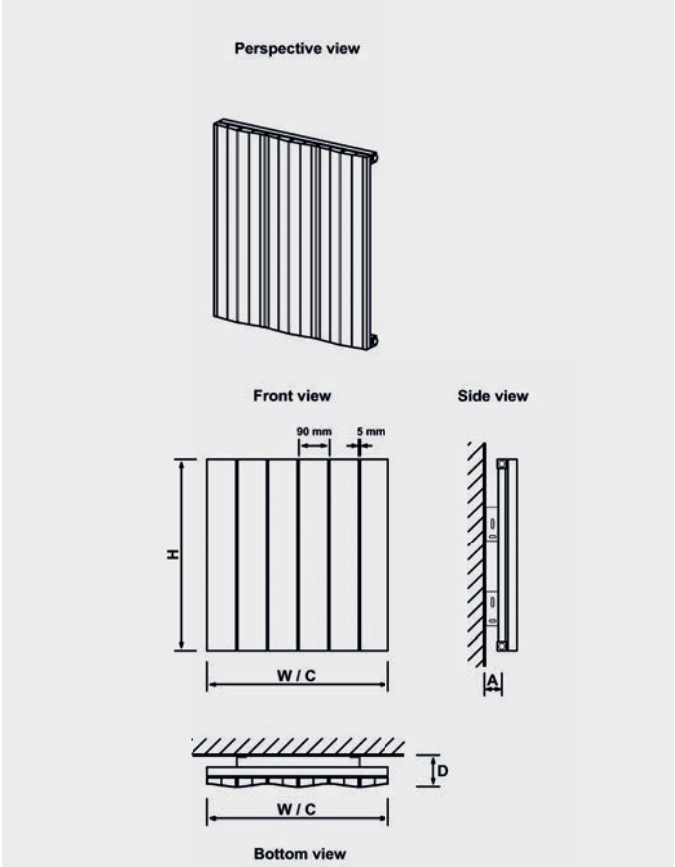

BURFORD - VERTICAL

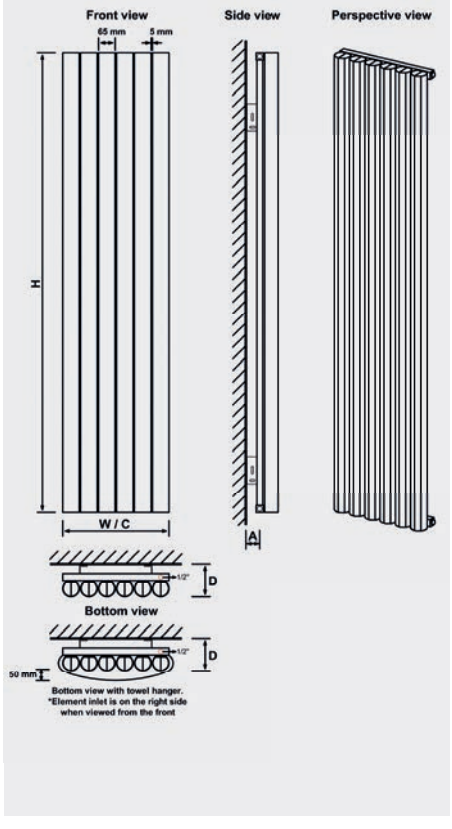

BURFORD - HORIZONTAL

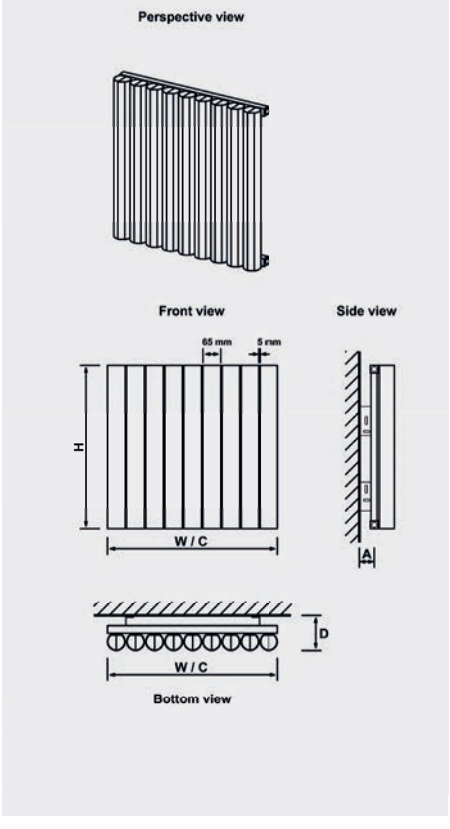

KELMSCOTT - VERTICAL

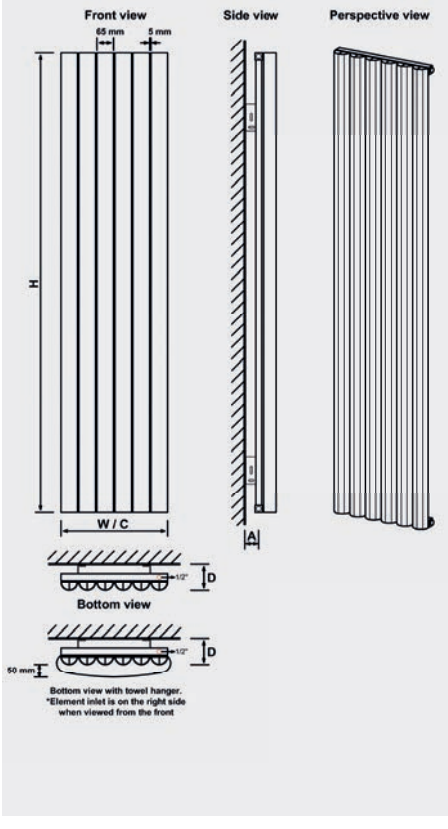

Technical Tables & Drawings

KELMSCOTT - ALUMINIUM RANGE

Kelmscott - Horizontal

Height H (mm)	Width W (mm)	Tappings C (mm)	Distance from wall - D (mm)	Tappings from wall - A (mm)	Tube Qty	Water Content L	Weight KG	Colour	▲T60 Watts	▲T60 BTU	Element Output	Element Type
600	485	485	83/103	33/53	7	1.43	6.0	Coloured	603	2058	300W	A, A+, C, H
600	625	625	83/103	33/53	9	1.84	7.5	Coloured	773	2638	450W	A, A+, C, H
600	835	835	83/103	33/53	12	2.45	9.8	Coloured	1025	3498	600W	A, A+, C, H
600	1045	1045	83/103	33/53	15	3.07	12.0	Coloured	1277	4358	750W	A, A+, C, H
600	1185	1185	83/103	33/53	17	3.47	13.5	Coloured	1444	4927	900W	A, A+, C, H

WITNEY - ALUMINIUM RANGE

Witney - Vertical

Height H (mm)	Width W (mm)	Tappings C (mm)	Distance from wall - D (mm)	Tappings from wall - A (mm)	Tube Qty	Water Content L	Weight KG	Colour	▲T60 Watts	▲T60 BTU	Element Output	Element Type
1800	280	280	136	53	6	3.34	14.4	Coloured	1252	4272	750W	A, A+, F, G
1800	375	375	136	53	8	4.46	18.9	Coloured	1648	5623	1000W	A, A+, F, G
1800	470	470	136	53	10	5.57	23.4	Coloured	2039	6958	1200W	A, A+, F, G

Witney - Horizontal

Height H (mm)	Width W (mm)	Tappings C (mm)	Distance from wall - D (mm)	Tappings from wall - A (mm)	Tube Qty	Water Content L	Weight KG	Colour	▲T60 Watts	▲T60 BTU	Element Output	Element Type
600	470	470	136	53	10	1.90	7.5	Coloured	823	2809	300W	A, A+, C, H
600	660	660	136	53	14	2.70	10.5	Coloured	1132	3863	600W	A, A+, C, H
600	850	850	136	53	18	3.50	13.5	Coloured	1437	4904	900W	A, A+, C, H
600	1040	1040	136	53	22	4.20	16.6	Coloured	1737	5927	1000W	A, A+, C, H
600	1230	1230	136	53	26	5.00	19.6	Coloured	2034	6941	1200W	A, A+, C, H

WINDRUSH - TRADITIONAL RANGE

Windrush

Height H (mm)	Width W (mm)	Tappings C (mm)	Distance from wall - D (mm)	Tappings from wall - A (mm)	Tube Qty	Water Content L	Weight KG	Colour	▲T60 Watts	▲T60 BTU	Element Output	Element Type
950	500	356	142	105	-	2.10	5.70	Chrome	147	502	100W	A, A+
950	600	470	142	105	-	2.27	6.40	Chrome	163	556	100W	A, A+
1195	500	370	130	105	-	2.70	7.40	Chrome	236	805	150W	A, A+, E
1195	600	470	130	105	-	3.00	7.80	Chrome	258	880	150W	A, A+, E
1550	500	370	130	105	-	3.50	8.70	Chrome	290	989	150W	A, A+, E
1550	600	470	130	105	-	3.80	9.25	Chrome	322	1099	150W	A, A+, E

STOUR - TRADITIONAL RANGE

Stour

Height H (mm)	Width W (mm)	Tappings C (mm)	Distance from wall - D (mm)	Tappings from wall - A (mm)	Tube Qty	Water Content L	Weight KG	Colour	▲T60 Watts	▲T60 BTU	Element Output	Element Type	Colour	▲T60 Watts	▲T60 BTU	Element Output	Element Type
690	500	426	125	53	-	1.30	5.50	Coloured	221	753	100W	A, A+, E	Chrome / Brushed Brass	125	428	N/A	N/A
690	600	526	125	53	-	2.10	5.60	Coloured	240	820	100W	A, A+, E	Chrome / Brushed Brass	177	604	100W	A, A+, E
1195	500	426	130	53	-	3.30	8.10	Coloured	287	979	100W	A, A+, E	Chrome / Brushed Brass	209	714	100W	A, A+, E
1195	600	526	130	53	-	3.70	8.47	Coloured	386	1318	150W	A, A+, E	Chrome / Brushed Brass	232	791	150W	A, A+, E
1550	500	426	130	53	-	3.80	9.40	Coloured	366	1248	150W	A, A+, E	Chrome / Brushed Brass	260	888	150W	A, A+, E
1550	600	526	130	53	-	4.10	9.86	Coloured	398	1359	150W	A, A+, E	Chrome / Brushed Brass	287	980	150W	A, A+, E



Kelmscott Horizontal



Witney Vertical



Witney Horizontal



Windrush



Stour

Technical Tables & Drawings

KELMSCOTT - HORIZONTAL

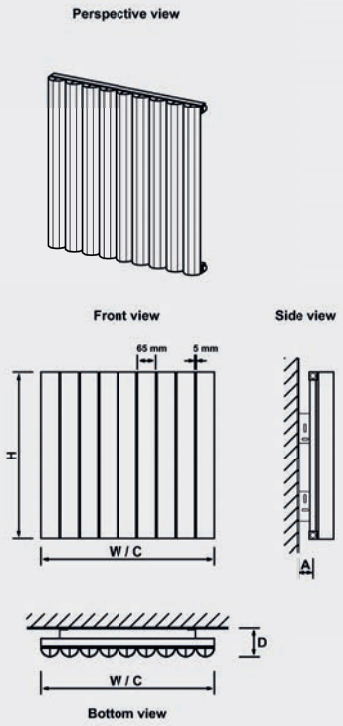

WITNEY - VERTICAL

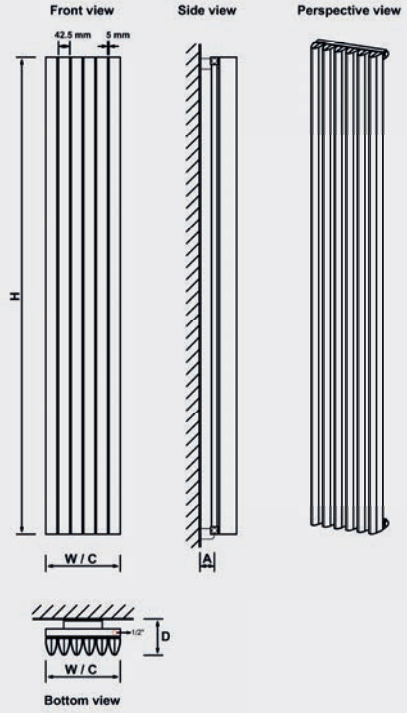

WITNEY - HORIZONTAL

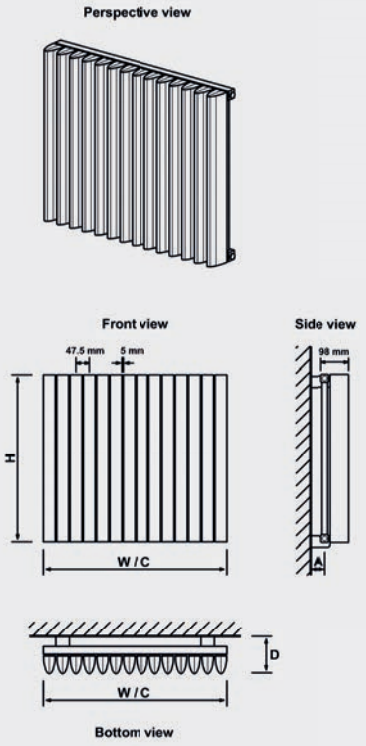

WINDRUSH

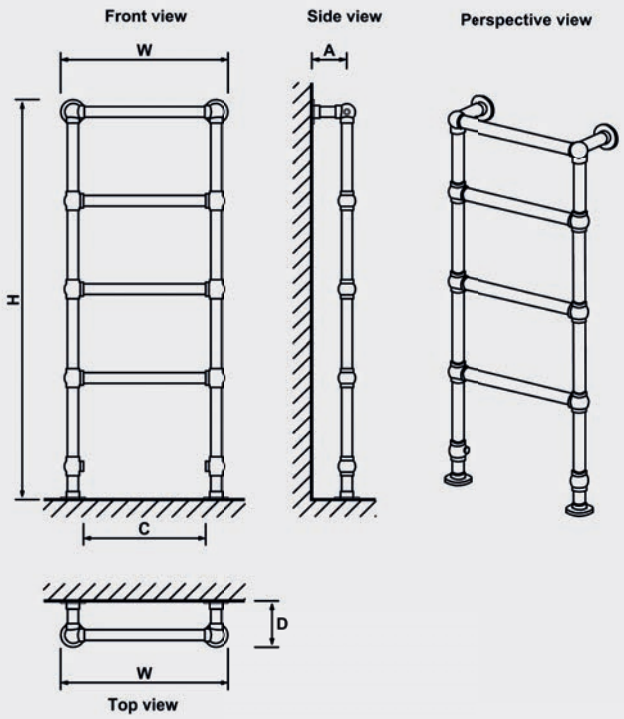

STOUR

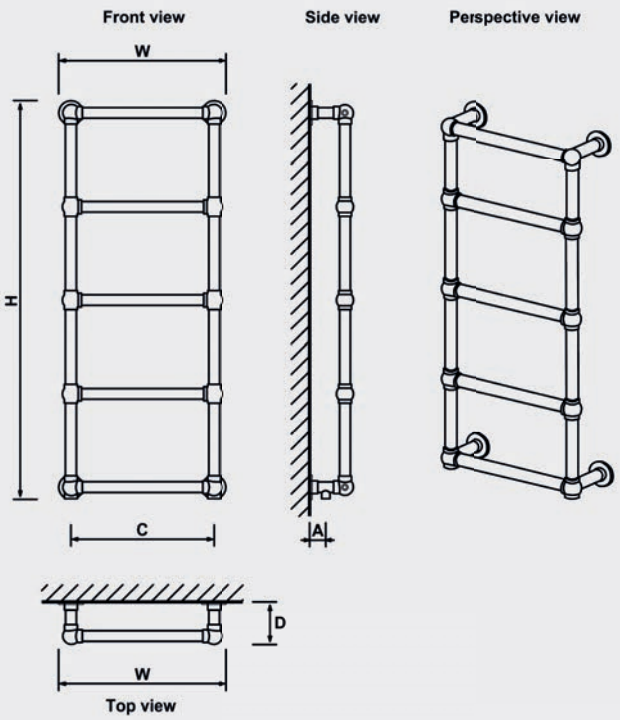

Technical Tables & Drawings

PAINSWICK - TRADITIONAL RANGE

Painswick

Height H (mm)	Width W (mm)	Tappings C (mm)	Depth - D (mm)	Tappings from floor- A (mm)	Tube Qty	Water Content L	Weight KG	Colour	▲T60 Watts	▲T60 BTU	Element Output	Element Type
778	686	556	254	100	-	3.51	11.50	Chrome	356	1215	N/A	N/A

FROME - TRADITIONAL RANGE

Frome

Height H (mm)	Width W (mm)	Tappings C (mm)	Distance from Wall - D (mm)	Tappings from wall- A (mm)	Tube Qty	Water Content L	Weight KG	Colour	▲T60 Watts	▲T60 BTU	Element Output	Element Type
940	474	344	130	105	-	4.90	7.45	Chrome	314	1071	150W	A, A+, C, E, H

SHERBOURNE - TRADITIONAL RANGE

Sherbourne

Height H (mm)	Width W (mm)	Tappings C (mm)	Distance from Wall - D (mm)	Tappings from wall- A (mm)	Tube Qty	Water Content L	Weight KG	Colour	▲T60 Watts	▲T60 BTU	Element Output	Element Type
940	600	470	142	105	-	3.50	7.24	Chrome	226	771	150W	A, A+, C, E, H

AVON - TRADITIONAL RANGE

Avon

Height H (mm)	Width W (mm)	Tappings C (mm)	Distance from Wall - D (mm)	Tappings from wall - A (mm)	Tube Qty	Water Content L	Weight KG	Colour	▲T60 Watts	▲T60 BTU	Element Output	Element Type
960	429	300	160	135	-	4.30	15.5	Chrome	450	1535	150W	A, A+, C, E, H
960	500	370	172	135	-	5.50	15.7	Chrome	530	1808	300W	A, A+, C, E, H

ISBOURNE - TRADITIONAL RANGE

Isbourne

Height H (mm)	Width W (mm)	Tappings C (mm)	Distance from Wall - D (mm)	Tappings from wall - A (mm)	Tube Qty	Water Content L	Weight KG	Colour	▲T60 Watts	▲T60 BTU	Element Output	Element Type
940	600	470	260	121	-	6.62	16.70	Chrome	894	3050	450W	A, A+, C, H



Painswick



Frome



Sherbourne



Isbourne



Avon

Technical Tables & Drawings

PAINSWICK

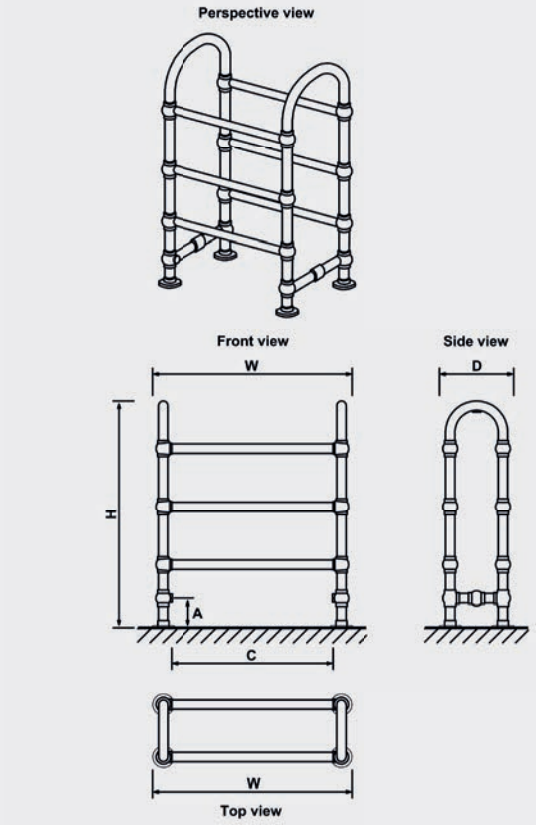

FROME

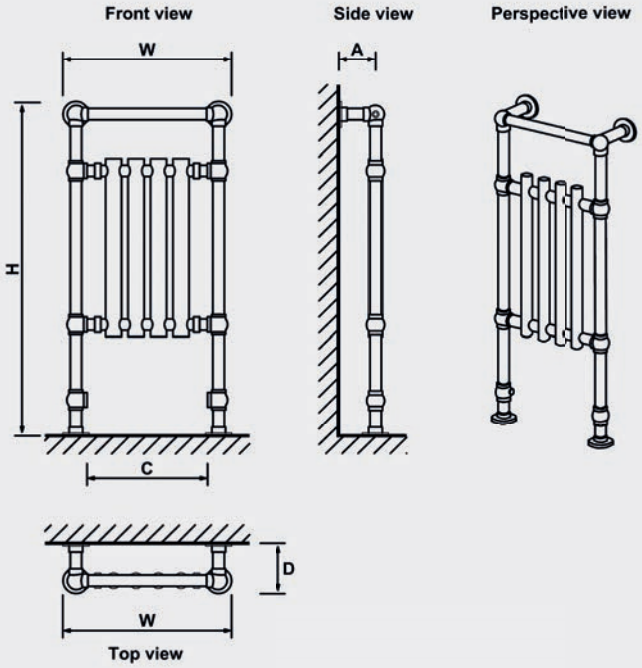

SHERBOURNE

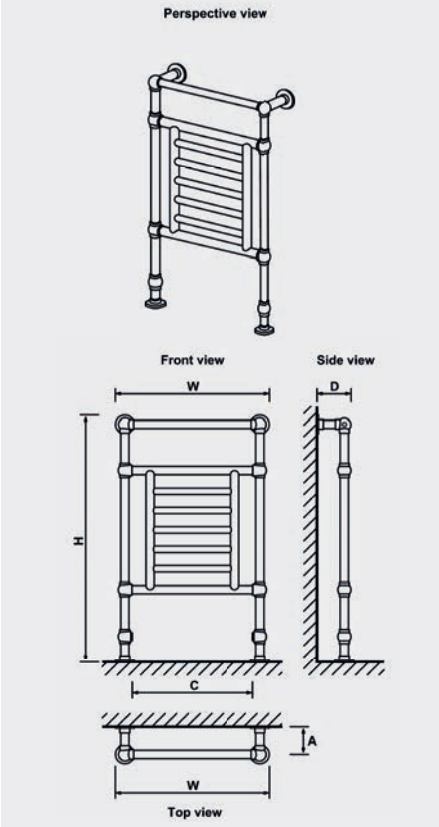

ISBOURNE

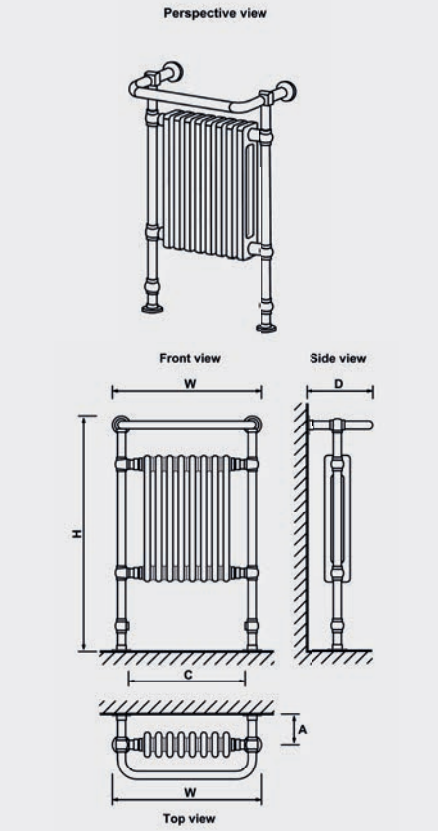

AVON

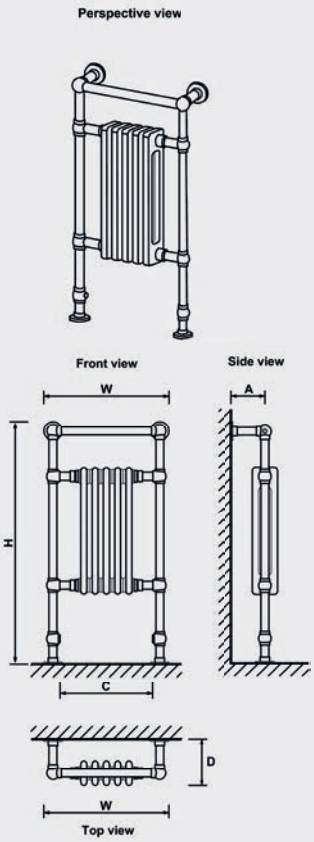

Technical Tables & Drawings

IMPERIA 2 COLUMN - TRADITIONAL RANGE

Imperia 2 Column - Vertical / Horizontal

Height H (mm)	Width W (mm)	Tappings C (mm)	Distance from Wall - D (mm)	Tappings from wall - A (mm)	Tube Qty	Water Content L	Weight KG	Colour	▲T60 Watts	▲T60 BTU	Element Output	Element Type
300	1145	1145	93	60	25	10.53	15.98	Coloured	875	2985	450W	A, A+, C, E*, H
300	1370	1370	93	60	30	12.60	19.00	Coloured	1048	3573	450W	A, A+, C, E*, H
600	425	425	93	60	9	5.74	11.57	Coloured	576	1965	300W	A, A+, C, H
600	470	470	93	60	10	6.38	12.72	Coloured	639	2180	300W	A, A+, C, H
600	515	515	93	60	11	7.01	13.93	Coloured	704	2402	300W	A, A+, C, H
600	560	560	93	60	12	7.65	15.09	Coloured	767	2617	300W	A, A+, C, H
600	605	605	93	60	13	7.60	15.05	Bare Metal/ Coloured	826	2818	450W	A, A+, C, H
600	830	830	93	60	18	10.60	20.49	Bare Metal/ Coloured	1143	3900	600W	A, A+, C, E*, H
600	1010	1010	93	60	22	14.03	26.68	Coloured	1407	4800	750W	A, A+, C, H
600	1145	1145	93	60	25	14.90	28.10	Bare Metal/ Coloured	1588	5418	900W	A, A+, H
600	1460	1460	93	60	32	20.41	38.30	Coloured	2046	6980	1000W	A+
1800	290	290	93	60	6	9.03	22.27	Coloured	1078	3678	N/A	N/A
1800	380	380	93	60	8	11.60	26.31	Bare Metal/ Coloured	1190	4059	N/A	N/A
1800	470	470	93	60	10	14.60	32.66	Bare Metal/ Coloured	1487	5074	N/A	N/A

* 600W Type E Element can be fitted

IMPERIA 3 COLUMN - TRADITIONAL RANGE

Imperia 3 Column - Vertical / Horizontal

Height H (mm)	Width W (mm)	Tappings C (mm)	Distance from Wall - D (mm)	Tappings from wall - A (mm)	Tube Qty	Water Content L	Weight KG	Colour	▲T60 Watts	▲T60 BTU	Element Output	Element Type
300	1145	1145	110	60	25	11.88	26.24	Coloured	1278	4360	600W	A, A+, C, E*, H
300	1370	1370	110	60	30	14.21	50.77	Coloured	1436	4896	750W	A, A+, C, E*, H
600	425	425	110	60	9	7.20	16.31	Coloured	850	2900	450W	A, A+
600	470	470	110	60	10	8.00	17.99	Coloured	945	3224	450W	A, A+, C, H
600	515	515	110	60	11	8.80	19.71	Coloured	1040	3548	450W	A, A+, C, H
600	560	560	110	60	12	9.60	21.39	Coloured	1134	3869	600W	A+, C, H
600	605	605	110	60	13	11.00	21.63	Bare Metal/ Coloured	1081	3688	600W	A, A+, C, H
600	830	830	110	60	18	15.30	29.55	Bare Metal/ Coloured	1498	5110	900W	A+, C, H
600	1010	1010	110	60	22	17.60	38.15	Coloured	2079	7093	1000W	A, A+, C, H
600	1145	1145	110	60	25	21.30	40.64	Bare Metal/ Coloured	2362	8059	1200W	A, A+, H
600	1460	1460	110	60	32	25.61	54.94	Coloured	3024	10317	1200W	A+, H
1800	290	290	110	60	6	12.60	32.06	Coloured	1608	5486	N/A	N/A
1800	380	380	110	60	8	17.40	38.77	Bare Metal/ Coloured	2099	7094	N/A	N/A
1800	470	470	110	60	10	21.90	48.20	Bare Metal/ Coloured	2623	8950	N/A	N/A

* 600W Type E Element can be fitted



Imperia 2 Column Vertical



Imperia 2 Column Horizontal



Imperia 3 Column Vertical



Imperia 3 Column Horizontal

Technical Tables & Drawings

IMPERIA 2 COLUMN VERTICAL

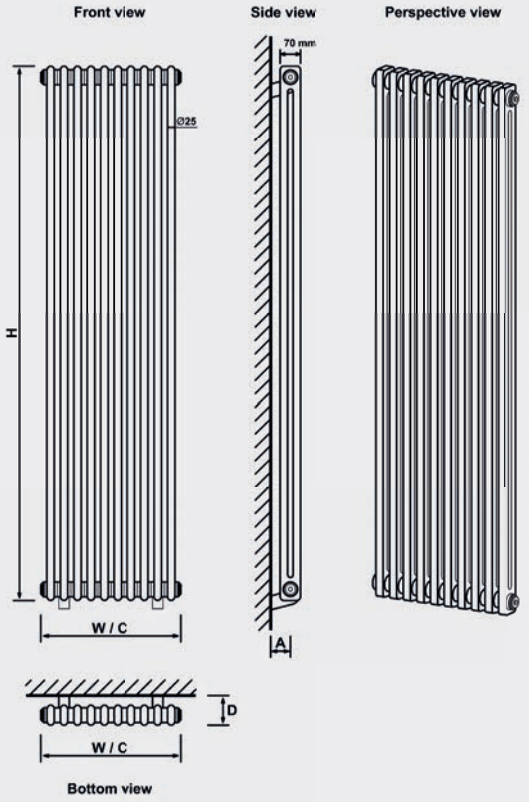

IMPERIA 2 COLUMN HORIZONTAL

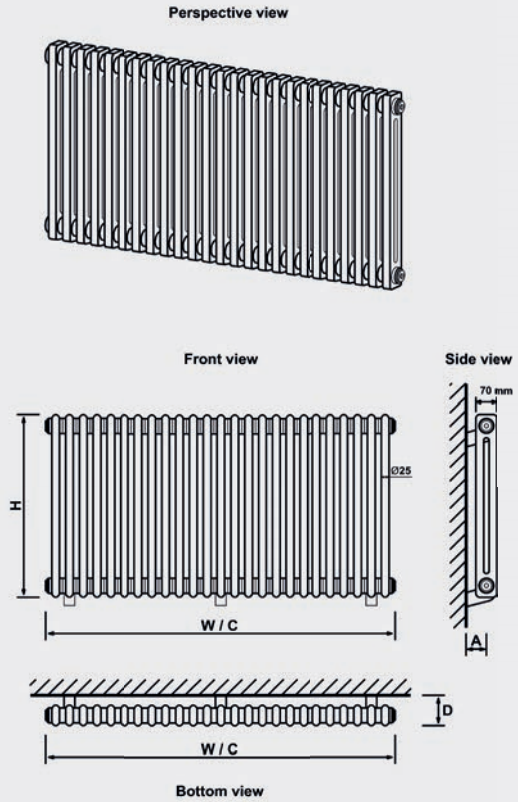

IMPERIA 3 COLUMN VERTICAL

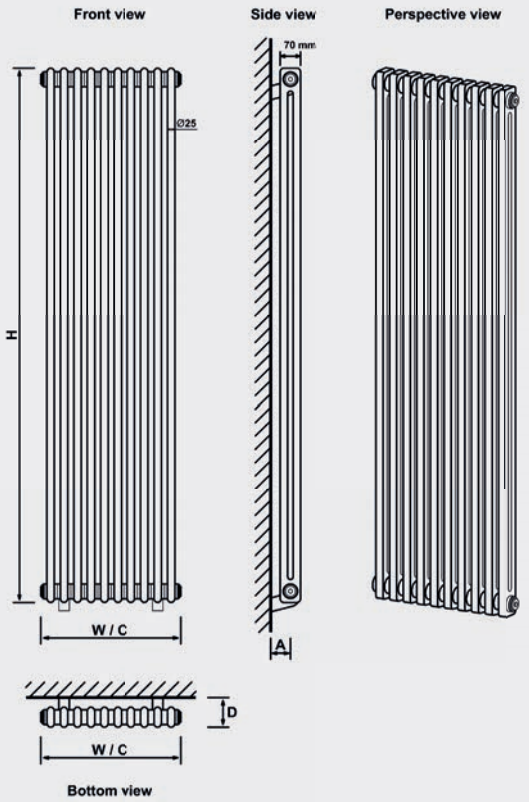

IMPERIA 3 COLUMN HORIZONTAL

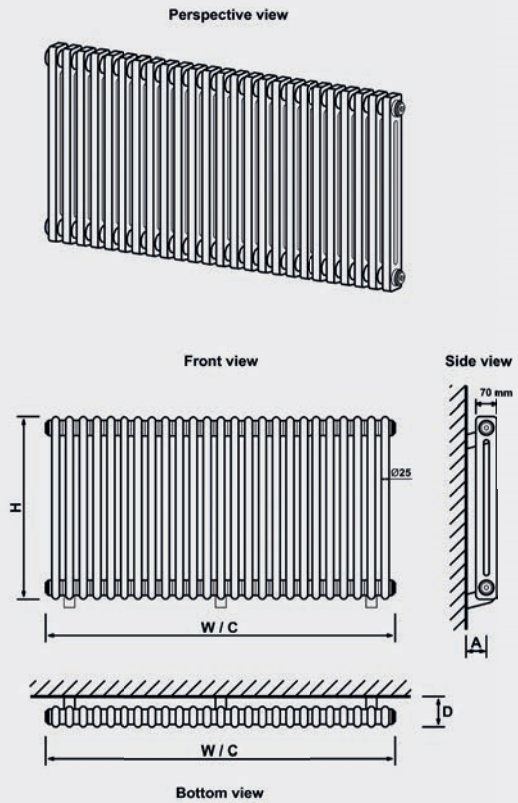

Technical Tables & Drawings

RIVASSA - TRADITIONAL RANGE

Rivassa 2 Column - Vertical / Horizontal

Height H (mm)	Width W (mm)	Tappings C (mm)	Distance from Wall - D (mm)	Tappings from wall - A (mm)	Tube Qty	Water Content L	Weight KG	Colour	▲T60 Watts	▲T60 BTU	Element Output	Element Type
300	1148	1148	100	66	25	9.25	17.5	Coloured	889	3034	450W	A,A+,C,E*,H
300	1373	1373	100	66	30	11.10	20.8	Coloured	1067	3641	600W	A,A+,C,E*,H
600	428	428	100	66	9	5.40	10.5	Coloured	567	1933	300W	A,A+,C,H
600	473	473	100	66	10	6.00	11.7	Coloured	630	2148	300W	A,A+,C,H
600	518	518	100	66	11	6.60	12.8	Coloured	693	2362	300W	A,A+,C,H
600	563	563	100	66	12	7.20	14.0	Coloured	756	2577	450W	A,A+,C,H
600	608	608	100	66	13	7.80	18.2	Coloured	818	2792	450W	A,A+,C,H
600	833	833	100	66	18	10.80	23.9	Coloured	1133	3866	600W	A,A+,C,E*,H
600	1010	1010	100	66	22	13.20	28.50	Coloured	1385	4727	750W	A,A+,C,H
600	1148	1148	100	66	25	15.10	31.8	Coloured	1573	5369	900W	A,A+,H
600	1460	1460	100	66	32	19.20	39.70	Coloured	2014	6874	1200W	A,A+,H
1800	293	293	100	66	6	8.90	22.9	Coloured	933	3185	N/A	N/A
1800	383	383	100	66	8	11.80	29.7	Coloured	1245	4247	N/A	N/A
1800	473	473	100	66	10	14.80	36.9	Coloured	1556	5308	N/A	N/A

*600w Type E Element can be fitted

Rivassa 3 Column - Vertical / Horizontal

Height H (mm)	Width W (mm)	Tappings C (mm)	Distance from Wall - D (mm)	Tappings from wall - A (mm)	Tube Qty	Water Content L	Weight KG	Colour	▲T60 Watts	▲T60 BTU	Element Output	Element Type
300	1148	1148	130	80	25	14.10	25.2	Coloured	1118	3816	600W	A,A+,C,E*,H
300	1373	1373	130	80	30	16.80	30.2	Coloured	1342	4579	750W	A,A+,C,E*,H
600	428	428	130	80	9	7.70	15.2	Coloured	734	2504	450W	A,A+,C,H
600	473	473	130	80	10	8.60	16.8	Coloured	816	2782	450W	A,A+,C,H
600	518	518	130	80	11	9.50	18.5	Coloured	898	3061	450W	A,A+,C,H
600	563	563	130	80	12	10.30	20.1	Coloured	979	3339	600W	A+,C,H
600	608	608	130	80	13	11.20	24.4	Coloured	1060	3616	600W	A+,C,H
600	833	833	130	80	18	15.50	32.8	Coloured	1467	5007	900W	A+,C,H
600	1010	1010	130	80	22	18.90	40.30	Coloured	1794	6123	1000W	A,A+,C,H
600	1148	1148	130	80	25	21.50	45.6	Coloured	2038	6954	1200W	A,A+,H
600	1460	1460	130	80	32	27.50	58.10	Coloured	2609	8904	1200W	A,A+,H
1800	293	293	130	80	6	13.20	33.0	Coloured	1563	5333	N/A	N/A
1800	383	383	130	80	8	17.60	43.6	Coloured	2084	7111	N/A	N/A
1800	473	473	130	80	10	22.10	53.9	Coloured	2605	8889	N/A	N/A

*600w Type E Element can be fitted



Rivassa 2 Column
Vertical



Rivassa 2 Column
Horizontal



Rivassa 3 Column
Horizontal



Rivassa 3 Column
Vertical

Technical Tables & Drawings

RIVASSA 2 COLUMN HORIZONTAL

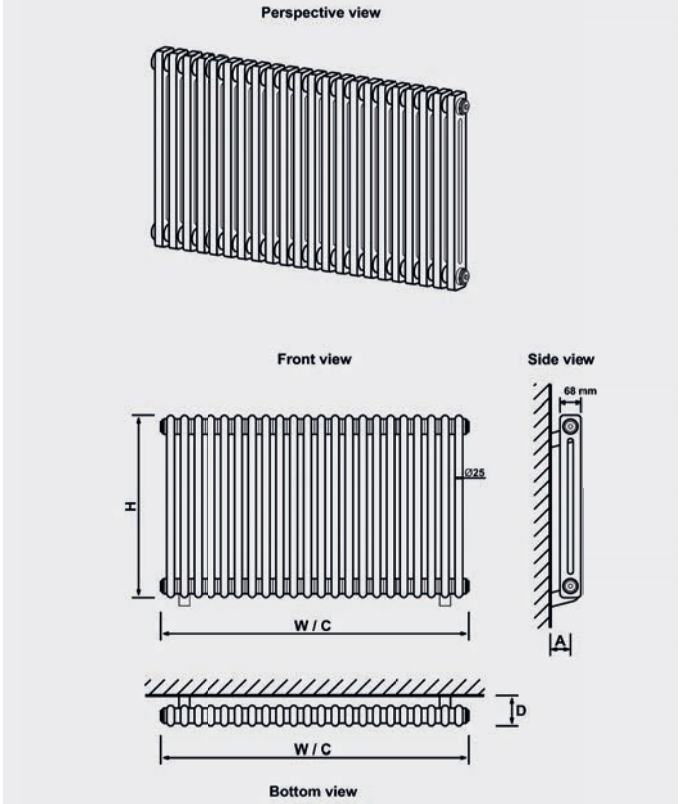

RIVASSA 2 COLUMN VERTICAL

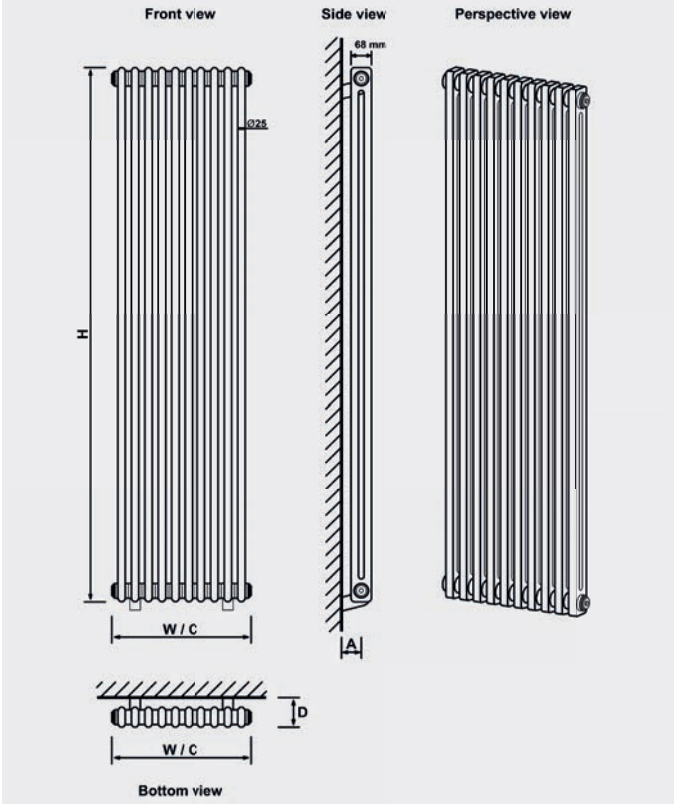

RIVASSA 3 COLUMN HORIZONTAL

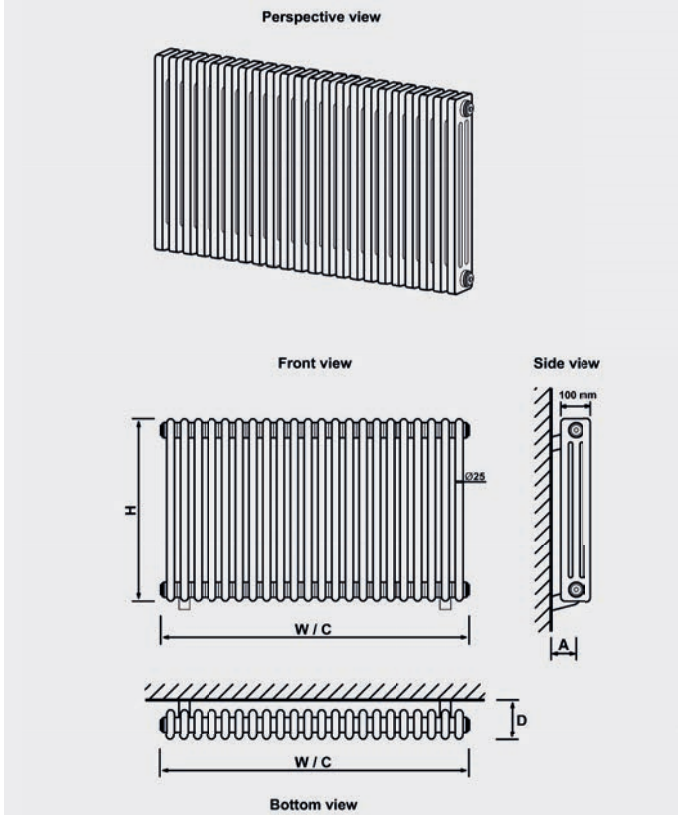

RIVASSA 3 COLUMN VERTICAL

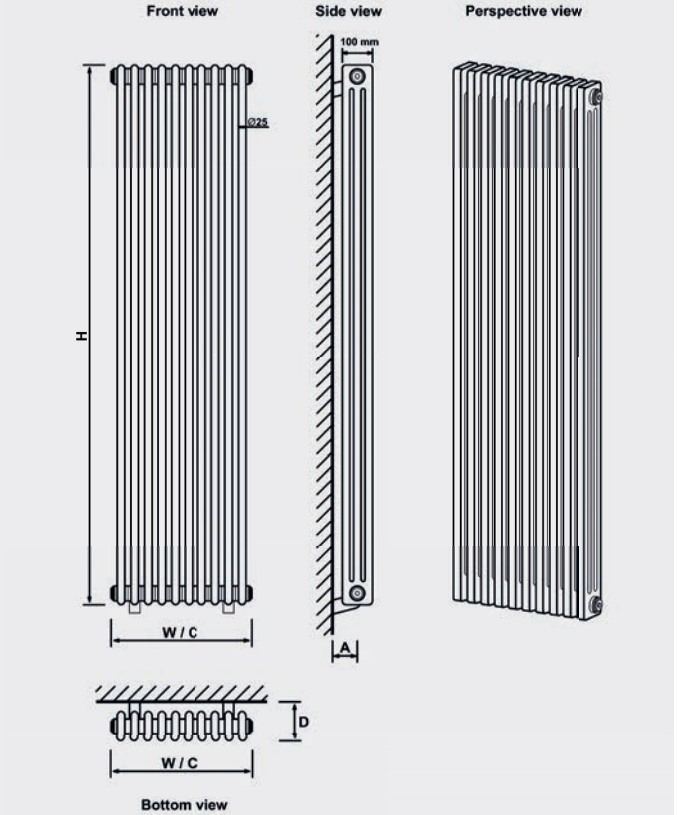

Technical Tables & Drawings

RIVASSA - TRADITIONAL RANGE

Rivassa 4 Column - Horizontal

Height H (mm)	Width W (mm)	Tappings C (mm)	Distance from Wall - D (mm)	Tappings from wall - A (mm)	Tube Qty	Water Content L	Weight KG	Colour	▲T60 Watts	▲T60 BTU	Element Output	Element Type
300	1010	1010	165	95	22	16.20	30.60	Coloured	1197	4085	600W	A,A+,C,E*,H
300	1373	1373	165	95	30	22.20	42.65	Coloured	1633	5573	1000W	A,A+,H
300	1505	1505	165	95	33	24.40	46.10	Coloured	1796	6110	1000W	A+,H
600	425	425	165	95	9	10.80	24.20	Coloured	869	2966	450W	A,A+
600	605	605	165	95	13	15.60	34.20	Coloured	1255	4283	750W	A+,C,H
600	785	785	165	95	17	20.40	43.50	Coloured	1641	5601	900W	A+,H
600	1010	1010	165	95	22	26.40	55.50	Coloured	2124	7249	1200W	A,A+
600	1190	1190	165	95	26	31.20	66.30	Coloured	2510	8567	1200W	A,A+

*600w Type E Element can be fitted

LEADON - TRADITIONAL RANGE

Leadon

Height H (mm)	Width W (mm)	Tappings C (mm)	Distance from Wall - D (mm)	Tappings from wall - A (mm)	Tube Qty	Water Content L	Weight KG	Colour	▲T60 Watts	▲T60 BTU	Element Output	Element Type
940	700	570	260	137	-	9.00	20.20	Chrome	897	3061	450W	A, A+, C, H

THAMES - TRADITIONAL RANGE

Thames

Height H (mm)	Width W (mm)	Tappings C (mm)	Distance from Wall - D (mm)	Tappings from wall - A (mm)	Tube Qty	Water Content L	Weight KG	Colour	▲T60 Watts	▲T60 BTU	Element Output	Element Type
1444	630	500	187	150	-	8.70	21.30	Chrome	945	3224	450W	A, A+, C, H

COLN - TRADITIONAL RANGE

Coln

Height H (mm)	Width W (mm)	Tappings C (mm)	Distance from Wall - D (mm)	Tappings from wall - A (mm)	Tube Qty	Water Content L	Weight KG	Colour	▲T60 Watts	▲T60 BTU	Element Output	Element Type
510	680	676	260	50	-	5.82	16.30	Chrome	704	2402	300W	A, A+, C, H

*On dual fuel installation, please use only Type A or Type A+ element

TWYVER - TRADITIONAL RANGE

Twyver

Height H (mm)	Width W (mm)	Tappings C (mm)	Distance from Wall - D (mm)	Tappings from wall - A (mm)	Tube Qty	Water Content L	Weight KG	Colour	▲T60 Watts	▲T60 BTU	Element Output	Element Type
952	684	547	158	108	-	3.30	14.60	Chrome	580	1979	N/A	N/A



Rivassa 4 Column Horizontal



Leadon



Thames



Coln



Twyver

Technical Tables & Drawings

RIVASSA 4 COLUMN HORIZONTAL

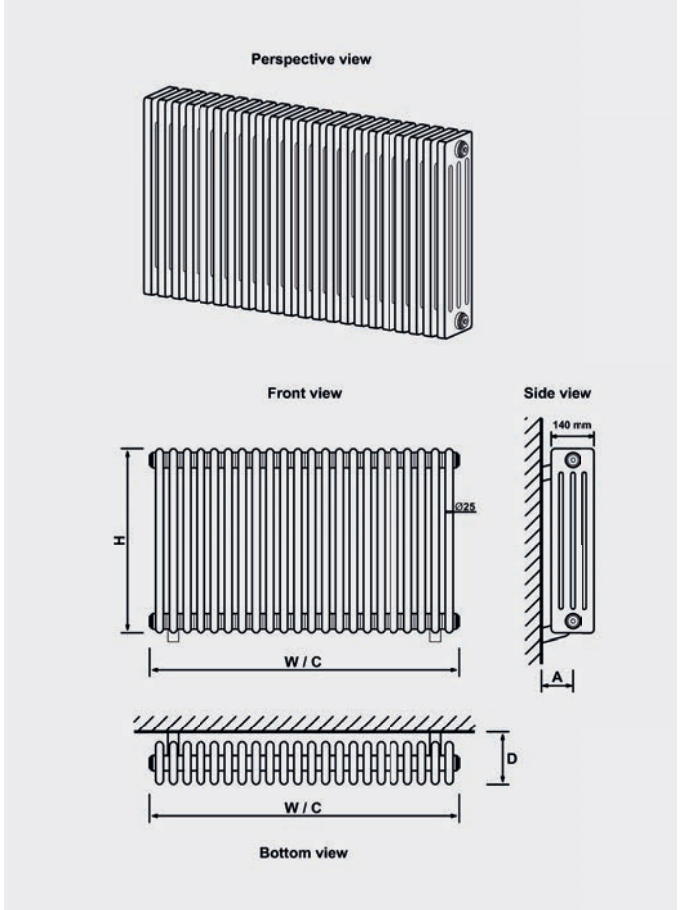

LEADON

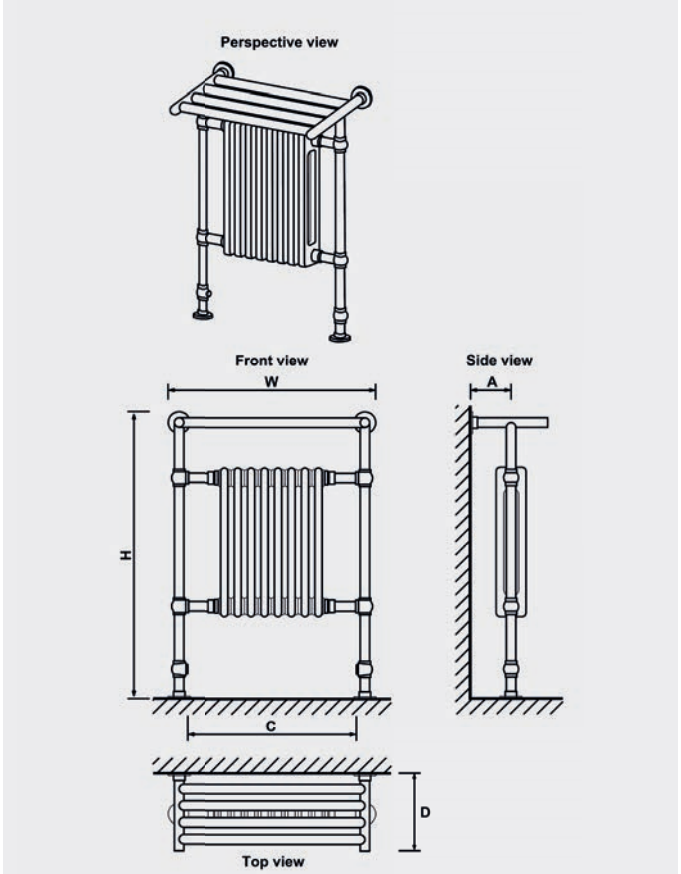

THAMES

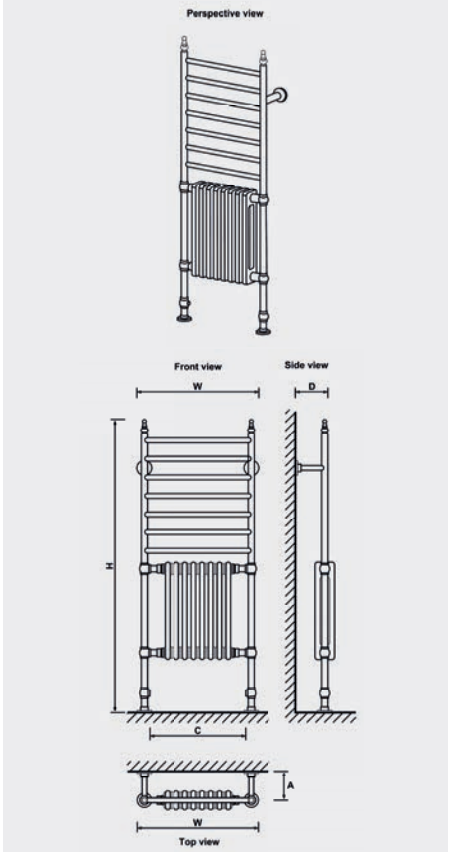

COLN

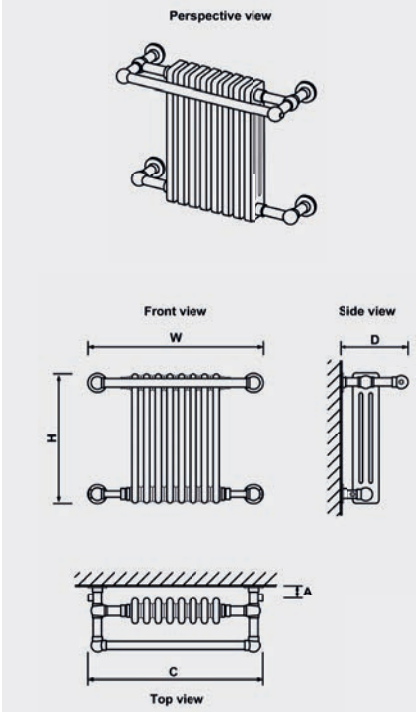

TWYVER

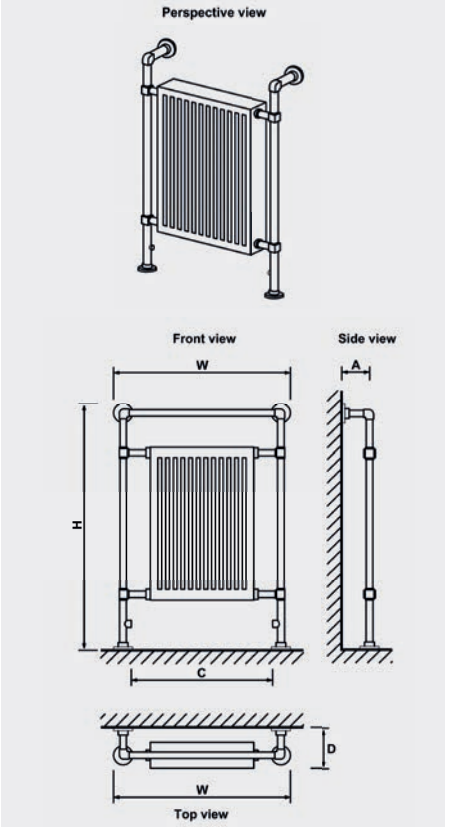



Showering

Whether you are looking for the elegance of traditional designs or the more modern up-to-date concepts, the functionality of this range adds reliability and ease of use to any bathroom.



Contents

Shower bundles	810 - 815
Traditional and modern shower valves	816 - 828
Bar valves	829 - 830
Shower shelves	830
Shower poles	831 - 833
Riser kits	834 - 836
Shower panels	837 - 839
Rail kits and Accessories	840
Riser kits	841
Shower handset	842 - 844
Hoses	844
Wall and Ceiling Mounted Showers	845
Shower arms	846 - 847
Shower heads	848 - 850
Body jets and Shower seat	851
Accessories	852 - 853

Shower Bundles

Bundles

Choosing your new showering kit has never been so easy. Browse our bundle selections rather than selecting items individually.

Suitable for large shower enclosures and smaller showerbath solutions, it's just a case selecting your colour and perfect showering needs.

LP2	- 0.2 bar minimum	MP	- 0.5 bar minimum	HP1	- 1 bar minimum

BUNDLE 01



Bundle 1

Description	Code	€ Ex VAT	€ Inc VAT
Concealed valve, round shower head & round shower arm	BND001	730.00	**897.90**

Bundle Components

- 68.0001 x1
- 68.0009 x1
- 68.0020 x2
- 78.0012 x1
- 78.0001 x1

BUNDLE 02



Bundle 2

Description	Code	€ Ex VAT	€ Inc VAT
Concealed valve, square shower head & square shower arm.	BND002	776.00	**954.48**

Bundle Components

- 68.0001 x1
- 68.0023 x1
- 68.0046 x2
- 78.0021 x1
- 78.0003 x1

BUNDLE 03

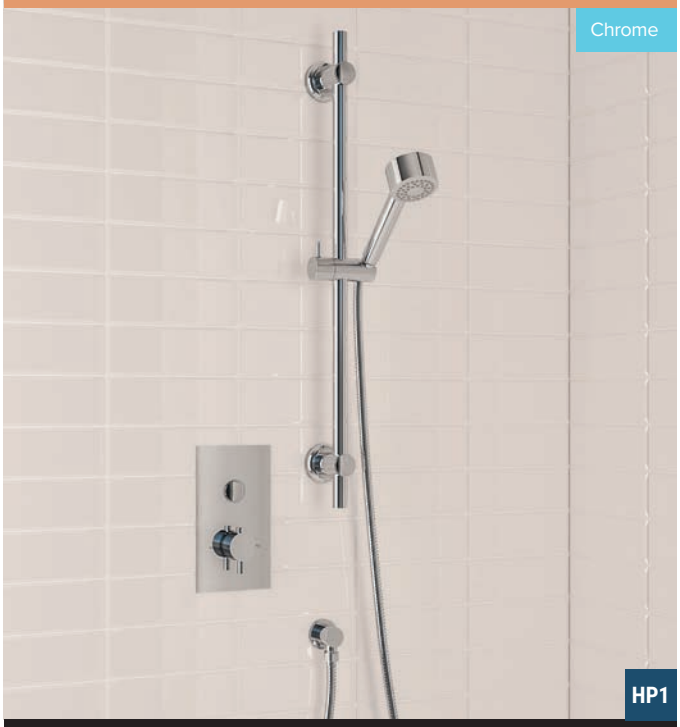

Bundle 3

Description	Code	€ Ex VAT	€ Inc VAT
Concealed valve, round slider rail shower kit.	BND003	401.00	**493.23**

Bundle Components

- 93.0029 x1
- 93.0044 x1

Shower Bundles

BUNDLE 04



Bundle 4

Description	Code	€ Ex VAT	€ Inc VAT
Concealed valve, rectangular slider rail shower kit	BND004	458.00	**563.34**

Bundle Components

- 93.0032 x1
- 93.0045 x1

BUNDLE 05

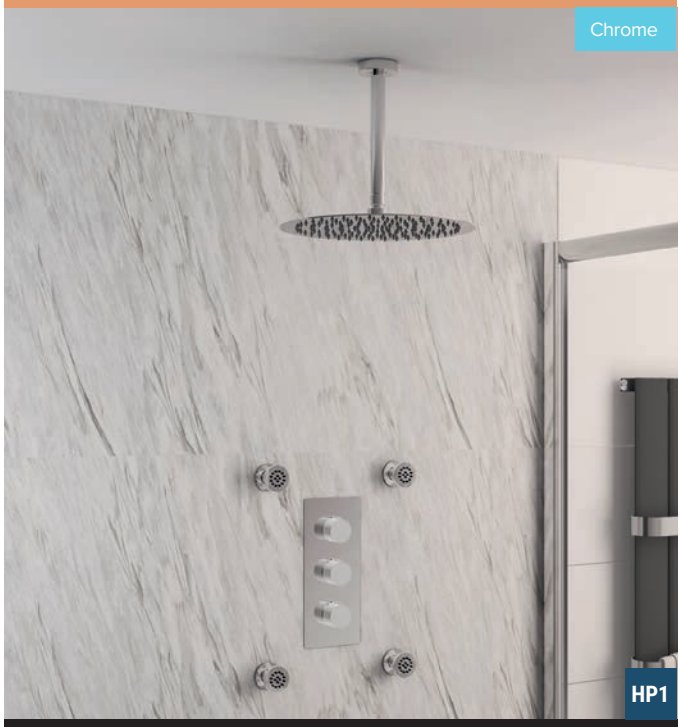

Bundle 5

Description	Code	€ Ex VAT	€ Inc VAT
Concealed valve, round shower head, round body jets & round shower arm	BND005	1123.00	**1381.29**

Bundle Components

- 68.0003 x1
- 68.0010 x1
- 68.0011 x3
- 78.0011 x1
- 78.0002 x1
- 78.0032 x4

BUNDLE 11

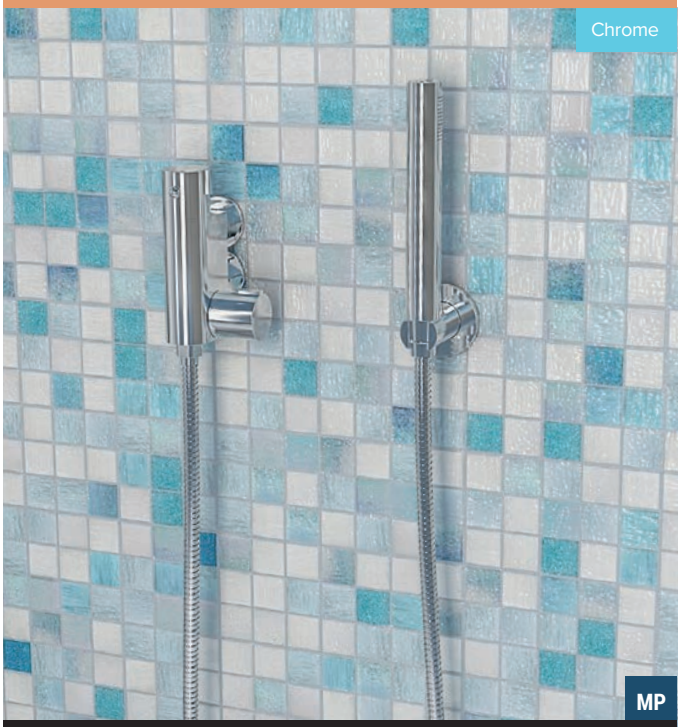

Bundle 11

Description	Code	€ Ex VAT	€ Inc VAT
Vertical exposed valve, round shower handset, shower hose & shower holder	BND011	313.00	**384.99**

Bundle Components

- 93.0100 x1
- 78.0025 x1
- 78.0040 x1
- 93.0064 x1

BUNDLE 08



Bundle 7

Description	Code	€ Ex VAT	€ Inc VAT
Exposed bar valve & breeze riser shower kit	BND008	381.00	**468.63**

Bundle Components

- 97.0001 x1
- 93.0025 x1

Shower Bundles

BUNDLE 14



Bundle 14

Description	Code	€ Ex VAT	€ Inc VAT
Thermostatic concealed shower valve, round fixed over head shower arm, shower head, shower hand set, shower hose, round wall elbow & shower handset holder.	BND014	352.00	**432.96**

Bundle Components

- 60.1007 x1
- 60.1008 x1
- 60.1009 x1
- 60.1011 x1
- 60.1012 x1
- 60.1013 x1

* Available February 2023

BUNDLE 07

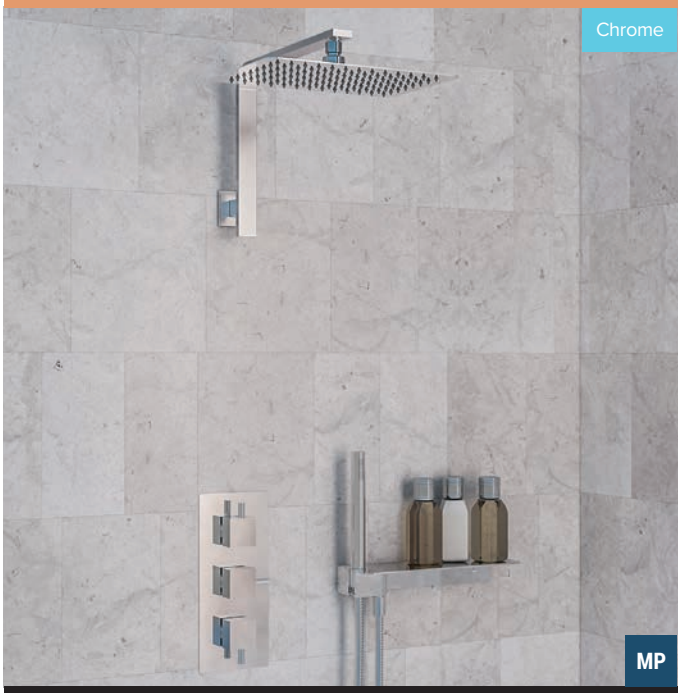

Bundle 7

Description	Code	€ Ex VAT	€ Inc VAT
Concealed valve, rectanglar shower head, square shower arm & luxury shower shelf.	BND007	1269.00	**1560.87**

Bundle Components

- 68.0003 x1
- 68.0024 x1
- 68.0012 x3
- 78.0020 x1
- 78.0023 x1
- 78.0005 x1

BUNDLE 10

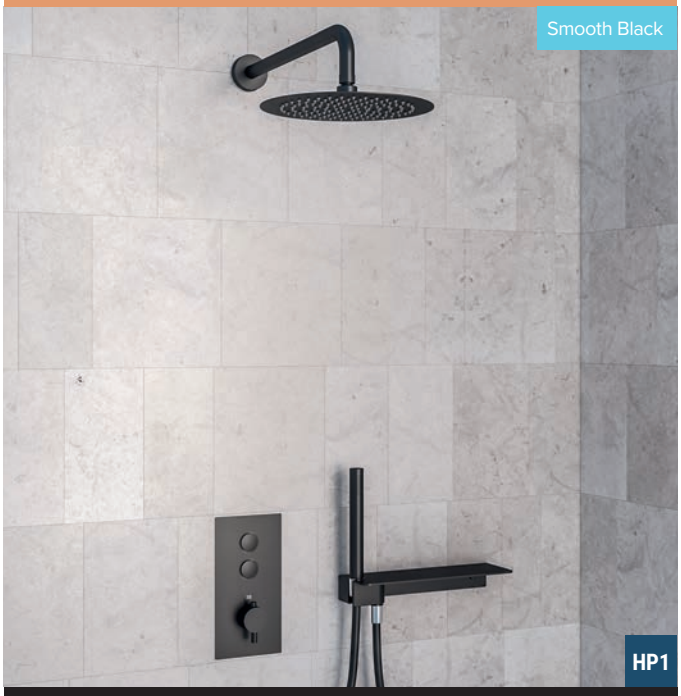

Bundle 10

Description	Code	€ Ex VAT	€ Inc VAT
Concealed push button valve, luxury shower shelf, round shower head & round shower arm	BND010	1013.00	**1245.99**

Bundle Components

- 93.0091 x1
- 78.0048 x1
- 78.0046 x1
- 93.0094 x1

Shower Bundles

BUNDLE 15

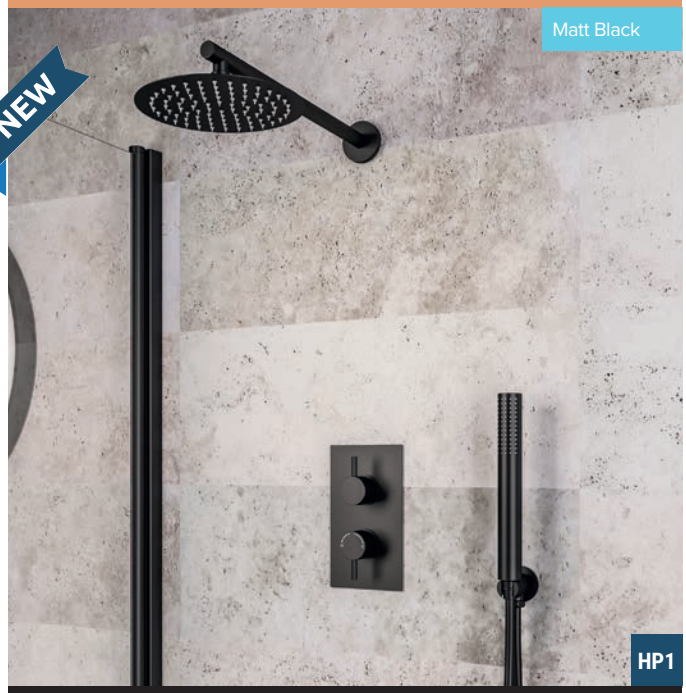

Bundle 11

Description	Code	€ Ex VAT	€ Inc VAT
Thermostatic concealed shower valve, round fixed over head shower arm, shower head, shower hand set, shower hose, round wall elbow & shower handset holder.	BND015	378.00	**464.94**

Bundle Components

- 60.1014 x1
- 60.1015 x1
- 60.1016 x1
- 60.1017 x1
- 60.1018 x1
- 60.1019 x1

* Available February 2023

BUNDLE 13

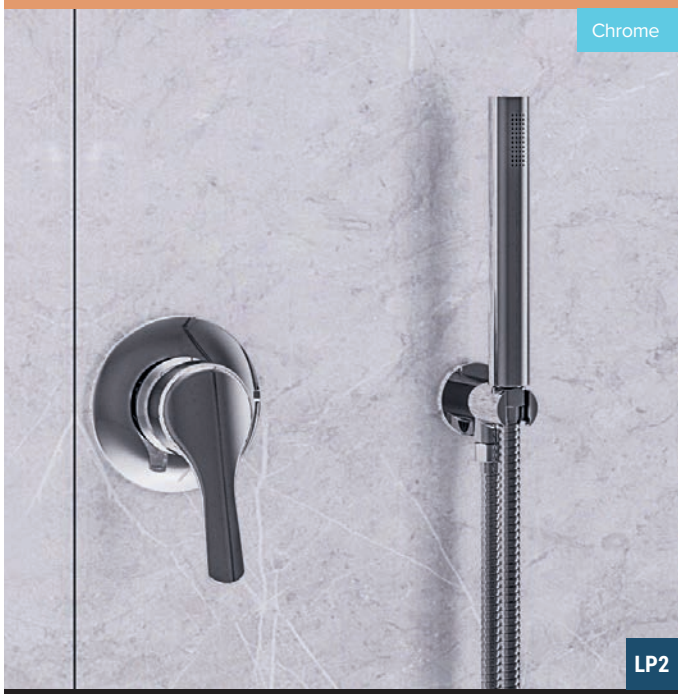

Bundle 13

Description	Code	€ Ex VAT	€ Inc VAT
Concealed manual valve, round outlet elbow with shower holder, shower hose & round round shower handset	BND013	334.00	**410.82**

Bundle Components

- 68.0056 x1
- 93.0064 x1
- 78.0040 x1
- 93.0106 x1

BUNDLE 09



Bundle 09

Description	Code	€ Ex VAT	€ Inc VAT
Traditional concealed valve, round shower head, swivel shower arm, shower hose, round outlet elbow & shower handset	BND009	1104.00	**1357.92**

Bundle Components

- 68.0002 x1
- 68.0007 x1
- 68.0028 x1
- 68.0029 x1
- 93.0048 x1
- 93.0069 x1
- 98.0009 x1
- 93.0101 x1
- 97.0007 x1
- 93.0063 x1

Shower Bundles

BUNDLE 16



Bundle 16

Description	Code	€ Ex VAT	€ Inc VAT
Thermostatic concealed shower valve, round fixed over head shower arm, shower head, shower hand set, shower hose, round wall elbow & shower handset holder.	BND016	390.00	**479.70**

Bundle Components

- 60.1021 x1
- 60.1022 x1
- 60.1023 x3
- 60.1024 x1
- 60.1025 x1
- 60.1026 x1

* Available February 2023

BUNDLE 06

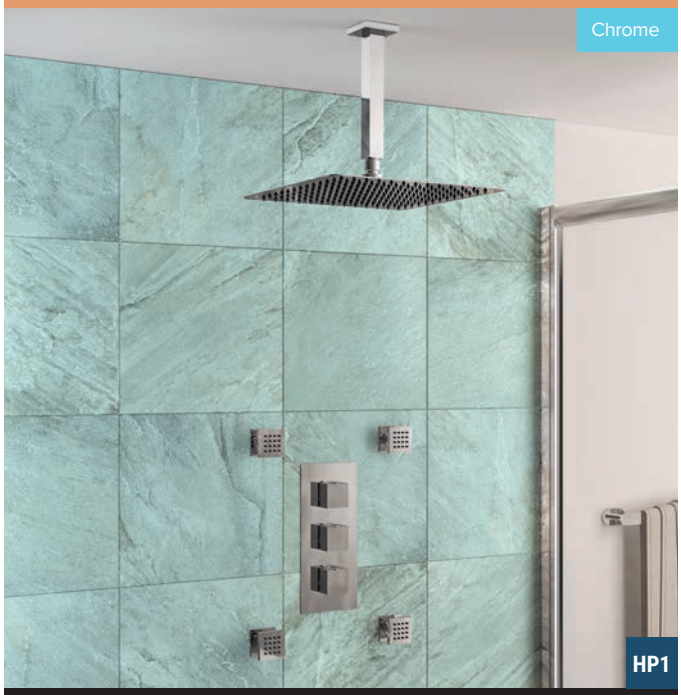

Bundle 06

Description	Code	€ Ex VAT	€ Inc VAT
Concealed valve, rectangular shower head, square body jets & sqaure shower arm	BND006	1167.00	**1435.41**

Bundle Components

- 68.0003 x1
- 68.0024 x1
- 68.0046 x3
- 78.0010 x1
- 78.0004 x1
- 78.0031 x4

BUNDLE 17

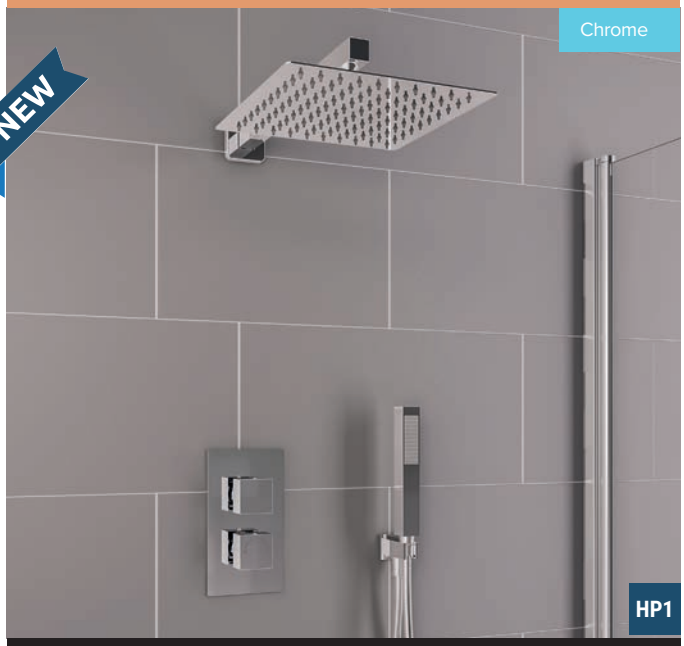

Bundle 17

Description	Code	€ Ex VAT	€ Inc VAT
Thermostatic concealed shower valve, square fixed over head shower arm, shower head, shower hand set, shower hose, square wall elbow & shower handset holder.	BND017	363.00	**446.49**

Bundle Components

- 60.1027 x1
- 60.1028 x1
- 60.1029 x3
- 60.1031 x1
- 60.1032 x1
- 60.1033 x1

* Available February 2023

Shower Bundles

BUNDLE 12

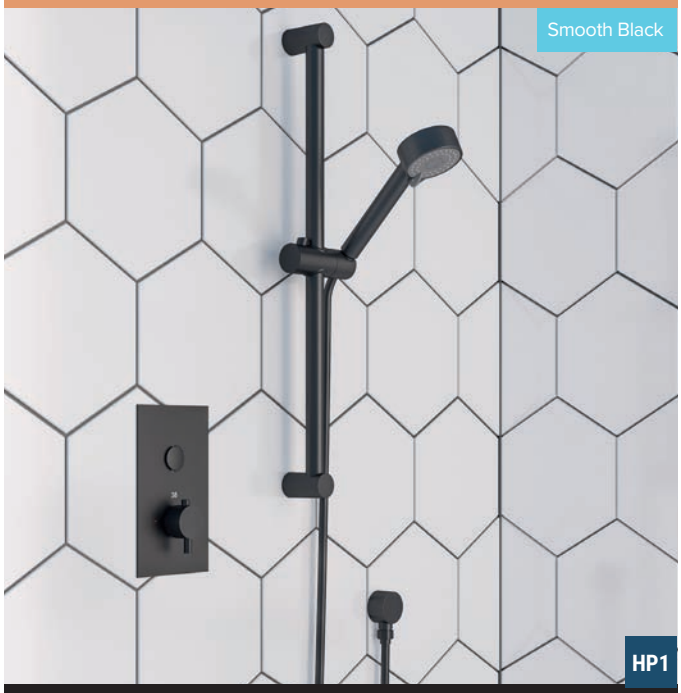

Bundle 12

Description	Code	€ Ex VAT	€ Inc VAT
Concealed push button valve, round slide rail kit & round outlet elbow	BND012	460.00	**565.80**

Bundle Components

- 93.0090 x1
- 93.0099 x1
- 93.0096 x1

BUNDLE 18

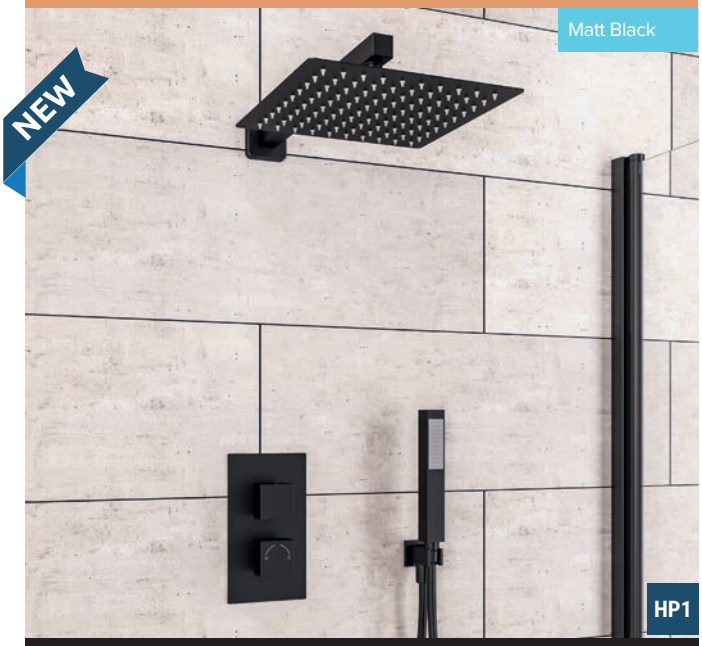

Bundle 18

Description	Code	€ Ex VAT	€ Inc VAT
Thermostatic concealed shower valve, square fixed over head shower arm, shower head, shower hand set, shower hose, square wall elbow & shower handset holder.	BND018	388.00	**477.24**

Bundle Components

- 60.1034 x1
- 60.1035 x1
- 60.1036 x3
- 60.1037 x1
- 60.1038 x1
- 60.1039 x1

* Available February 2023

BUNDLE 19



Bundle 19

Description	Code	€ Ex VAT	€ Inc VAT
Thermostatic concealed shower valve, square fixed over head shower arm, shower head, shower hand set, shower hose, square wall elbow & shower handset holder.	BND019	399.00	**490.77**

Bundle Components

- 60.1041 x1
- 60.10242 x1
- 60.1043 x3
- 60.1044 x1
- 60.1045 x1
- 60.1046 x1

* Available February 2023

Shower Valves

TWIN CONCEALED 3/4 THERMOSTATIC SHOWER VALVES

68.0001

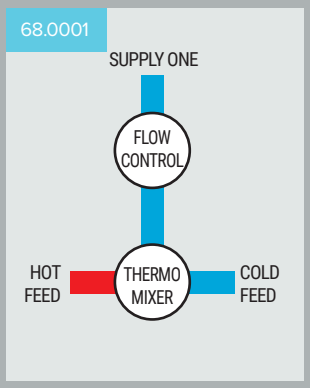

LP1



68.0001, 68.0021 & 68.0046 (x2)

68.0002

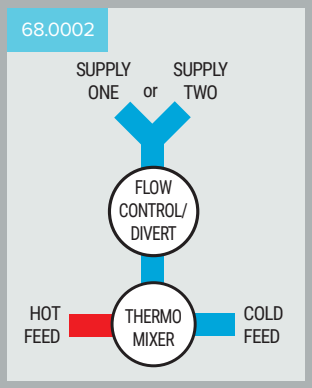

LP1



68.0002, 68.0023 & 68.0046 (x2)

For a complete full working shower valve you will need:

A = VALVE B = PLATE C = HANDLES

Choose the following three components to make up a complete shower valve

Valves - Chrome

Description	Code	€ Ex VAT	€ Inc VAT
Twin control shower valve only Chrome	68.0001	394.00	**484.62**
Twin control shower valve with diverter only	68.0002	434.00	**533.82**

Plates - Chrome

Description	Code	€ Ex VAT	€ Inc VAT
Oval twin plate round rings	68.0005	91.00	**111.93**
Square twin plate round rings	68.0009	91.00	**111.93**
Oval twin plate square rings	68.0021	91.00	**111.93**
Square twin plate square rings	68.0023	91.00	**111.93**

Handles - Chrome

Description	Code	€ Ex VAT	€ Inc VAT
Round control handle each	68.0011	41.00	**50.43**
Square lever control handle each	68.0012	42.00	**51.66**
Round lever control handle each	68.0020	41.00	**50.43**
Flow Cross Handles Each*	68.0025	42.00	**51.66**
Temp Cross Handles Each*	68.0026	42.00	**51.66**
Traditional Flow Lever Handle Each*	68.0029	38.00	**46.74**
Traditional Temp Lever Handle Each*	68.0030	38.00	**46.74**
Square Control Handle each	68.0046	41.00	**50.43**

*NB One flow handle and one temperature handle required for twin shower valve.

FEATURES

- Chrome plated brass body
- Excellent flow rates at all pressures
- CD cartridge technology
- Thermostatic control, anti scald & override function

WRAS

TMV 2 SCHEME

On all items on this page

68.0001, 68.0023 & 68.0012 (x2)

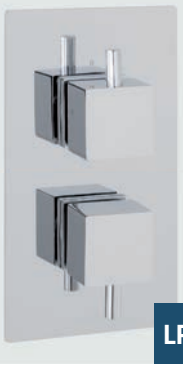

LP1

68.0002, 68.0009, 68.0025 & 68.0026



LP1

68.0001, 68.0009 & 68.0011 (x2)



LP1

68.0002, 68.0009 & 68.0020 (x2)



LP1

68.0002, 68.0005, 68.0025 & 68.0026



LP1

68.0001, 68.0005 & 68.0011 (x2)



LP1

68.0002, 68.0005 & 68.0020 (x2)



LP1

68.0001, 68.0021 & 68.0012 (x2)



LP1

68.0002, 68.0005, 68.0029 & 68.0030



LP1

Shower Valves

TRIPLE CONCEALED 3/4 THERMOSTATIC SHOWER VALVES

68.0003, 68.0010 & 68.0011 (x3)



LP1

68.0003, 68.0010 & 68.0020 (x3)



LP1

68.0003, 68.0010 68.0025 (x2) & 68.0026



LP1

68.0004, 68.0010 68.0029 (x2) & 68.0030



LP1

68.0004, 68.0024 & 68.0012 (x3)

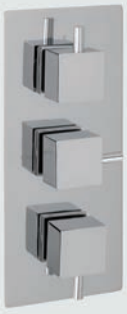

LP1

68.0004, 68.0024 & 68.0046 (x3)



LP1

For a complete full working shower valve you will need:

A = VALVE B = PLATE C = HANDLES

Choose the following three components to make up a complete shower valve

Valves - Chrome			
Description	**Code**	**€ Ex VAT**	**€ Inc VAT**
Triple control shower valve only	68.0003	434.00	**533.82**
Triple control shower valve with diverter only	68.0004	509.00	**626.07**

Plates - Chrome			
Description	**Code**	**€ Ex VAT**	**€ Inc VAT**
Square triple plate square rings	68.0024	114.00	**140.22**
Square triple plate round rings	68.0010	114.00	**140.22**

Handles - Chrome			
Description	**Code**	**€ Ex VAT**	**€ Inc VAT**
Round control handle each	68.0011	41.00	**50.43**
Square lever control handle each	68.0012	42.00	**51.66**
Round lever control handle each	68.0020	41.00	**50.43**
Flow Cross Handles Each*	68.0025	42.00	**51.66**
Temp Cross Handles Each*	68.0026	42.00	**51.66**
Traditional Flow Lever Handle Each*	68.0029	38.00	**46.74**
Traditional Temp Lever Handle Each*	68.0030	38.00	**46.74**
Square Control Handle each	68.0046	41.00	**50.43**

*NB Two flow handles and one temperature handle required for triple shower valve.

FEATURES

- Chrome plated brass body
- Excellent flow rates at all pressures
- Ceramic Disc cartridge technology
- Thermostatic control, anti scald & override function

WRAS

On all items on this page

68.0003

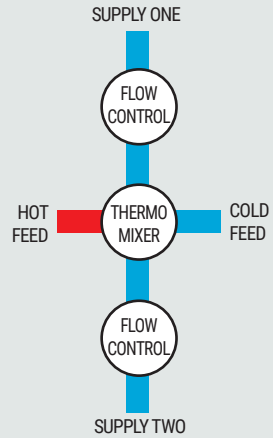

68.0004

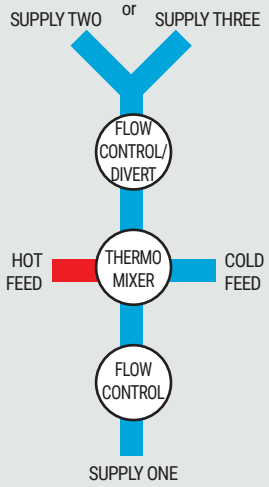

LP1 - 0.1 bar minimum

Pressure (bar)	Flow (litres/min)
0.1	9
0.5	23
1	38
2	54
3	65

Note: At maintained equal inlet pressures with open outlet at mid blend temperature.

Shower Valves

CONCEALED 3/4 TRIPLE OUTLET THERMOSTATIC SHOWER VALVES

68.0003, 68.0006 68.0029 (x2) & 68.0030



LP1

68.0003, 68.0022 & 68.0046 (x3)

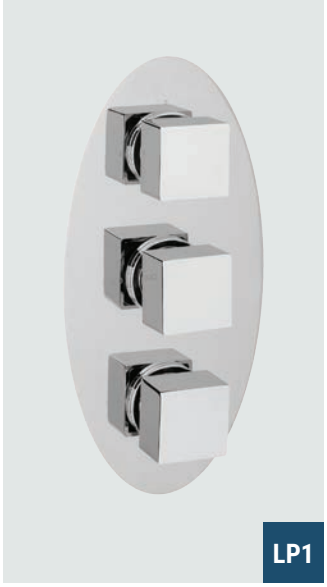

LP1

For a complete full working shower valve you will need:

A = VALVE B = PLATE C = HANDLES

Choose the following three components to make up a complete shower valve

Valves - Chrome

Description	Code	€ Ex VAT	€ Inc VAT
Triple control shower valve only	68.0003	434.00	**533.82**
Triple control shower valve with diverter only	68.0004	509.00	**626.07**

Plates - Chrome

Description	Code	€ Ex VAT	€ Inc VAT
Oval triple plate round rings	68.0006	164.00	**201.72**
Oval triple plate square rings	68.0022	164.00	**201.72**

Handles - Chrome

Description	Code	€ Ex VAT	€ Inc VAT
Round control handle each	68.0011	41.00	**50.43**
Square lever control handle each	68.0012	42.00	**51.66**
Flow Cross Handles Each*	68.0025	42.00	**51.66**
Temp Cross Handles Each*	68.0026	42.00	**51.66**
Round lever control handle each	68.0020	41.00	**50.43**
Traditional Flow Lever Handle Each*	68.0029	38.00	**46.74**
Traditional Temp Lever Handle Each*	68.0030	38.00	**46.74**
Square Control Handle each	68.0046	41.00	**50.43**

*NB Two flow handles and one temperature handle required for triple shower valve.

FEATURES

- Chrome plated brass body
- Excellent flow rates at all pressures
- Ceramic Disc cartridge technology
- Thermostatic control, anti scald & override function

WRAS

TMV2 SCHEME

On all items on this page

Pressure (bar)	Flow (litres/min)
0.1	9
0.5	23
1	38
2	54
3	65

Note: At maintained equal inlet pressures with open outlet at mid blend temperature.

LP1 - 0.1 bar minimum

68.0004, 68.0006 68.0025 (x2) & 68.0026



LP1

68.0004, 68.0006 & 68.0020 (x3)



LP1

68.0003, 68.0006 & 68.0011 (x3)



LP1

68.0003, 68.0022 & 68.0012 (x3)

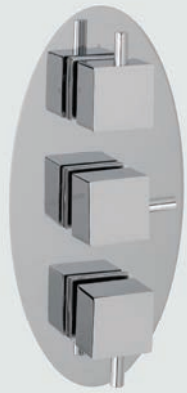

LP1

Shower Valves

CONCEALED TRADITIONAL THERMOSTATIC 3/4 SHOWER VALVES

68.0001, 68.0007
68.0027 &
68.0028



LP1

68.0002, 68.0007
68.0028 &
68.0029



LP1

68.0002, 68.0007
68.0029 &
68.0030



LP1

68.0003, 68.0008
68.0027 & (x2)
68.0028



LP1

68.0004, 68.0008
68.0029 & (x2)
68.0028



LP1

68.0004, 68.0008
68.0029 & (x2)
68.0030



LP1

For a complete full working shower valve you will need:

A = VALVE B = PLATE C = HANDLES

Choose the following three components to make up a complete shower valve

Valves - Chrome			
Description	**Code**	**€ Ex VAT**	**€ Inc VAT**
Twin control shower valve only Chrome	68.0001	394.00	**484.62**
Twin control shower valve with diverter only	68.0002	434.00	**533.82**
Triple control shower valve only	68.0003	434.00	**533.82**
Triple control shower valve with diverter only	68.0004	509.00	**626.07**

Plates - Chrome			
Description	**Code**	**€ Ex VAT**	**€ Inc VAT**
Traditional twin plate only	68.0007	98.00	**120.54**
Traditional triple plate only	68.0008	118.00	**145.14**

Handles - Chrome			
Description	**Code**	**€ Ex VAT**	**€ Inc VAT**
Traditional Flow Cross Handle Each*	68.0027	44.00	**54.12**
Traditional Temp Cross Handle Each*	68.0028	44.00	**54.12**
Traditional Flow Lever Handle Each*	68.0029	38.00	**46.74**
Traditional Temp Lever Handle Each*	68.0030	38.00	**46.74**

*NB Two flow handles and one temperature handle required for triple shower valve.

FEATURES

- Chrome plated brass body
- Excellent flow rates at all pressures Ceramic Disc cartridge technology
- Thermostatic control, anti scald & override function

WRAS

On all items on this page

Shower Valves

CONCEALED 3/4 PUSH BUTTON SHOWER VALVES

Modern push button flow controlled shower valves for easy operation and minimalist appearance. Available in single, twin or triple outlets for all your showering needs.

WRAS

On all items on this page



HP1

Round Concealed Thermostatic Single Push Button Shower Valve Chrome

Single Push Button Shower Valves			
Description	Code	€ Ex VAT	€ Inc VAT
Single Push Button	93.0029	301.00	**370.23**
Pressure		HP1 (1 bar minimum)	



HP1

Round Concealed Thermostatic Double Push Button Shower Valve Chrome

Double Push Button Shower Valves			
Description	Code	€ Ex VAT	€ Inc VAT
Double Push Button	93.0030	380.00	**467.40**
Pressure		HP1 (1 bar minimum)	



HP1

Round Concealed Thermostatic Triple Push Button Shower Valve Chrome

Triple Push Button Shower Valves			
Description	Code	€ Ex VAT	€ Inc VAT
Triple Push Button	93.0031	426.00	**523.98**
Pressure		HP1 (1 bar minimum)	



HP1

Square Concealed Thermostatic Single Push Button Shower Valve

Single Push Button Shower Valves			
Description	Code	€ Ex VAT	€ Inc VAT
Single Push Button	93.0032	304.00	**373.92**
Pressure		HP1 (1 bar minimum)	



HP1

Square Concealed Thermostatic Double Push Button Shower Valve

Double Push Button Shower Valves			
Description	Code	€ Ex VAT	€ Inc VAT
Double Push Button	93.0033	383.00	**471.09**
Pressure		HP1 (1 bar minimum)	



HP1

Square Concealed Thermostatic Triple Push Button Shower Valve

Triple Push Button Shower Valves			
Description	Code	€ Ex VAT	€ Inc VAT
Triple Push Button	93.0034	430.00	**528.90**
Pressure		HP1 (1 bar minimum)	

FEATURES

All push button shower valves on this page:

- Chrome plated brass body
- Thermostatic control
- Ceramic disc cartridge technology
- Anti-scald & override function
- Can operate multiple functions at the same time

Pressure (bar)	Flow (litres/min)
1	11
2	16.2
3	20

Note: At maintained equal inlet pressures with open outlet at mid blend temperature.

MP - 0.5 bar minimum **HP1** - 1 bar minimum

Shower Valves

On all items on this page

CONCEALED 3/4 PUSH BUTTON SHOWER VALVES

Modern push button flow controlled shower valves for easy operation and minimalist appearance. Available in single, twin or triple outlets for all your showering needs.

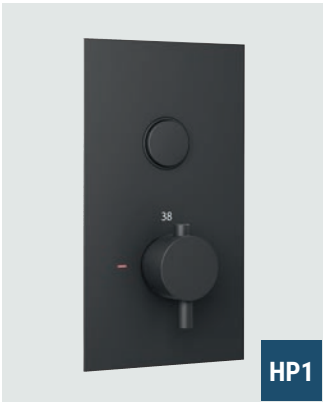

Round Concealed Thermo Single Push Button Shower Valve Matt Smooth Black

Round Single Push Button		
Code	€ Ex VAT	€ Inc VAT
93.0090	315.00	**387.45**
Pressure	HP1 (1 bar minimum)	

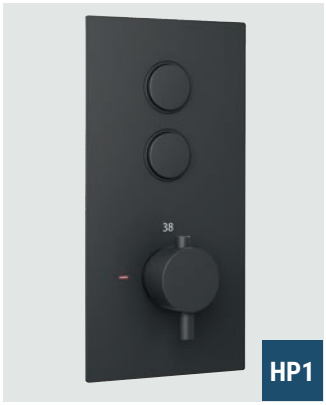

Round Concealed Thermo Double Push Button Shower Valve Matt Smooth Black

Round Double Push Button		
Code	€ Ex VAT	€ Inc VAT
93.0091	394.00	**484.62**
Pressure	HP1 (1 bar minimum)	



Square Concealed Thermo Single Push Button Shower Valve Matt Smooth Black

Square Single Push Button		
Code	€ Ex VAT	€ Inc VAT
93.0092	317.00	**389.91**
Pressure	HP1 (1 bar minimum)	



Square Concealed Thermo Double Push Button Shower Valve Matt Smooth Black

Square Double Push Button		
Code	€ Ex VAT	€ Inc VAT
93.0093	401.00	**493.23**
Pressure	HP1 (1 bar minimum)	

FEATURES

All push button shower valves on this page:

- Matt Smooth Black finish
- Ceramic disc cartridge technology
- Can operate multiple functions at the same time
- Thermostatic control
- Anti-scald & override function

Pressure (bar)	Flow (litres/min)
1	11
2	16.2
3	20

Note: At maintained equal inlet pressures with open outlet at mid blend temperature.

THERMOSTATIC BATH SHOWER MIXERS

Thermostatic bath shower mixers that can be wall or deck mounted.



93.0038

New Biava Wall Mounted Thermostatic BSM w/o Kit Chrome

Code	€ Ex VAT	€ Inc VAT
93.0038	223.00	**274.29**
Pressure	MP (0.5 bar minimum)	

- Fixing centres 150mm
- Chrome plated brass body
- Thermostatic control
- Ceramic disc cartridge technology
- Anti-scald & override function
- Built in diverter

Shower kits page 820-826

93.0038 Pressure (bar)	Flow (litres/min)
0.5	8.3
1	12
2	18.5
3	22.5

Note: At maintained equal inlet pressures with open outlet at mid blend temperature.



93.0039

Cotswold Wall Mounted Thermostatic BSM w/o kit Chrome

Code	€ Ex VAT	€ Inc VAT
93.0039	188.00	**231.24**
Pressure	MP (0.5 bar minimum)	

- Fixing centres 150mm
- Chrome plated brass body
- Thermostatic control
- Ceramic disc cartridge technology
- Anti-scald & override function
- Built in diverter

Shower kits page 820-826

93.0039 Pressure (bar)	Flow (litres/min)
0.5	9
1	13.5
2	19.8
3	23.2

Note: At maintained equal inlet pressures with open outlet at mid blend temperature.



Pictured 93.0038 with 93.0040



93.0040

Deck Mounting Pillars Chrome

Code	€ Ex VAT	€ Inc VAT
93.0040	54.00	**66.42**

When fitted with 93.0038 or 93.0039, please change their centre fixings from 150mm to 180mm.

Shower Valves

TWO WAY THERMOSTATIC CONCEALED SHOWER VALVE

Modern twist-lever flow controlled shower valves for easy operation and minimalist appearance. Available in twin outlets for overhead showering and handsets.

On all items on this page



Two Way Round Thermostatic Concealed Shower Valve - Chrome

Round Concealed Valve - Chrome			
Description	Code	€ Ex VAT	€ Inc VAT
Round Concealed Valve	60.1009	254.00	**312.42**
Pressure		MP (0.5 bar minimum)	
* Available February 2023			



Two Way Modern Round Thermostatic Concealed Shower Valve - Matt Black

Round Concealed Valve - Matt Black			
Description	Code	€ Ex VAT	€ Inc VAT
Round Concealed Valve	60.1016	266.00	**327.18**
Pressure		MP (0.5 bar minimum)	
* Available February 2023			



Two Way Modern Round Thermostatic Concealed Shower Valve - Brushed Brass

Round Concealed Valve - Matt Black			
Description	Code	€ Ex VAT	€ Inc VAT
Round Concealed Valve	60.1023	268.00	**329.64**
Pressure		MP (0.5 bar minimum)	
* Available February 2023			



Two Way Modern Square Thermostatic Concealed Shower Valve - Chrome

Square Concealed Valve - Chrome			
Description	Code	€ Ex VAT	€ Inc VAT
Square Concealed Valve	60.1029	255.00	**313.65**
Pressure		MP (0.5 bar minimum)	
* Available February 2023			



Two Way Modern Square Thermostatic Concealed Shower Valve - Matt Black

Square Concealed Valve - Matt Black			
Description	Code	€ Ex VAT	€ Inc VAT
Square Concealed Valve	60.1036	266.00	**327.18**
Pressure		MP (0.5 bar minimum)	
* Available February 2023			



Two Way Modern Square Thermostatic Concealed Shower Valve - Brushed Brass

Square Concealed Valve - Brushed Brass			
Description	Code	€ Ex VAT	€ Inc VAT
Square Concealed Valve	60.1043	269.00	**330.87**
Pressure		MP (0.5 bar minimum)	
* Available February 2023			

FEATURES

All shower valves on this page:

- PVD coated brass body
- Ceramic disc cartridge technology
- Thermostatic control
- Anti-scald & override function

Pressure (bar)	Flow (litres/min)
1	11
2	16.2
3	20

Note: At maintained equal inlet pressures with open outlet at mid blend temperature.

MP - 0.5 bar minimum **HP1** - 1 bar minimum

Shower Valves

On all items on this page

CONCEALED HORIZONTAL THERMOSTATIC SHOWER VALVE

Horizontal thermostatic shower valve with built-in shower handset and second outlet for a bath filler or fixed shower head.

Chrome

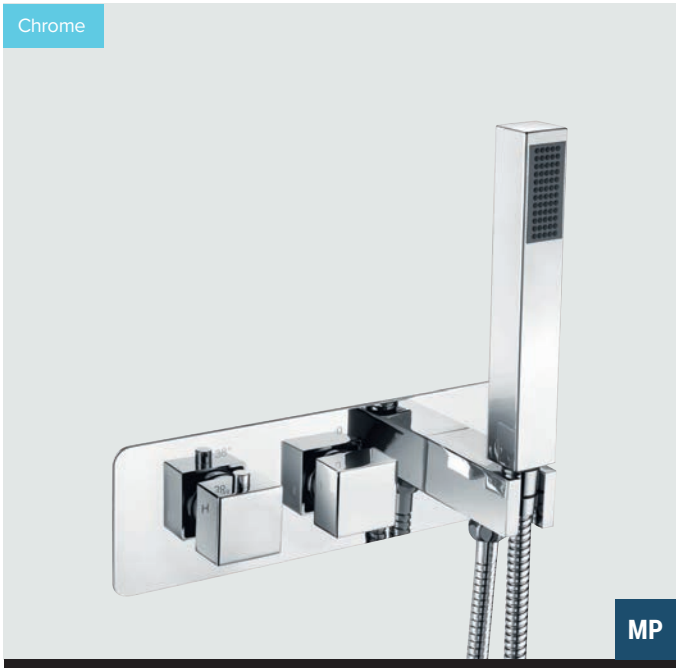

MP

Square Horizontal Thermostatic Shower Valve Inc Kit Chrome

Description	Code	€ Ex VAT	€ Inc VAT
Square Horizontal Thermostatic Shower Valve Inc Kit	93.0027	443.00	**544.89**

Pressure: MP (0.5 bar minimum)

Chrome

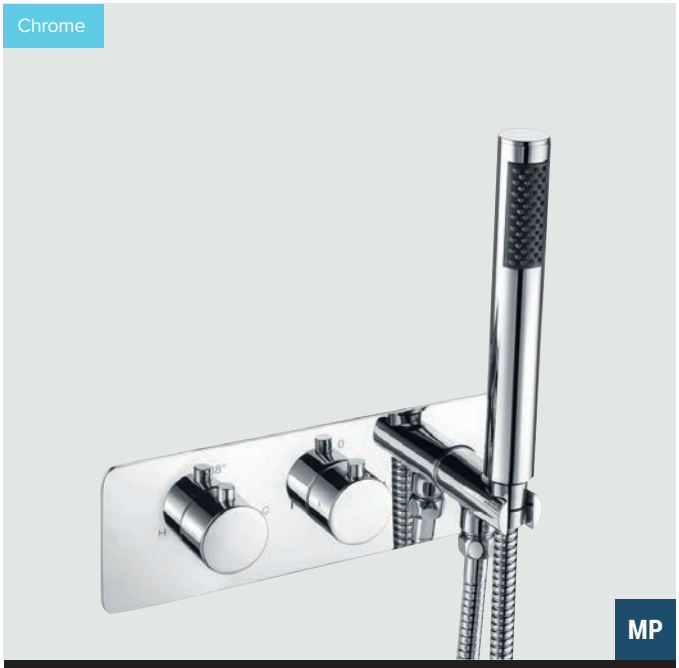

MP

Round Horizontal Thermostatic Shower Valve Inc Kit Chrome

Description	Code	€ Ex VAT	€ Inc VAT
Round Horizontal Thermostatic Shower Valve Inc Kit	93.0028	422.00	**519.06**

Pressure: MP (0.5 bar minimum)

Smooth Black



MP

Square Horizontal Shower Valve Inc Kit

Description	Code	€ Ex VAT	€ Inc VAT
Square Horizontal Thermostatic Shower Valve Inc Kit	93.0086	462.00	**568.26**

Pressure: MP (0.5 bar minimum)

Smooth Black



MP

Round Horizontal Shower Valve Inc Kit

Description	Code	€ Ex VAT	€ Inc VAT
Round Horizontal Thermostatic Shower Valve Inc Kit	93.0087	439.00	**539.97**

Pressure: MP (0.5 bar minimum)

FEATURES

All shower valves on this page:

- Brass construction
- Thermostatic control
- Ceramic disc cartridge technology
- Anti-scald & override function

Single function handset and shower hose included

Pressure (bar)	Flow (litres/min)
0.5	9.7
1	14
2	20.5
3	27

Note: At maintained equal inlet pressures with open outlet at mid blend temperature.

Shower Valves

MANUAL SHOWER VALVES

Manufactured from solid brass, this traditional yet stylish manual valve is suitable for both concealed and exposed installations.
With hard-wearing and reliable ceramic disc technology and an easy-to-use lever action, this valve is suitable for all installations.

Manual Valve
Concealed 68.0056



LP2

Manual Valve
Exposed 68.0056



LP2



LP2

Manual Valve Exposed / Concealed

Description	Code	€ Ex VAT	€ Inc VAT
Manual Valve Exposed / Concealed	68.0056	191.00	**234.93**

Pressure LP2 (0.2 bar minimum)

- Chrome plated brass body
- Excellent flow rates at all pressures
- Can have either a top or bottom outlet
- Ceramic disc cartridge technology
- Exposed valve has 150 centres

NOSTALGIC SINGLE LEVER SHOWER VALVE

Manufactured from solid brass, this traditional yet stylish manual valve is suitable for both concealed and exposed installations.
With hard-wearing and reliable ceramic disc technology and an easy-to-use lever action, this valve is suitable for all installations.

Nostalgic Exposed
68.0051

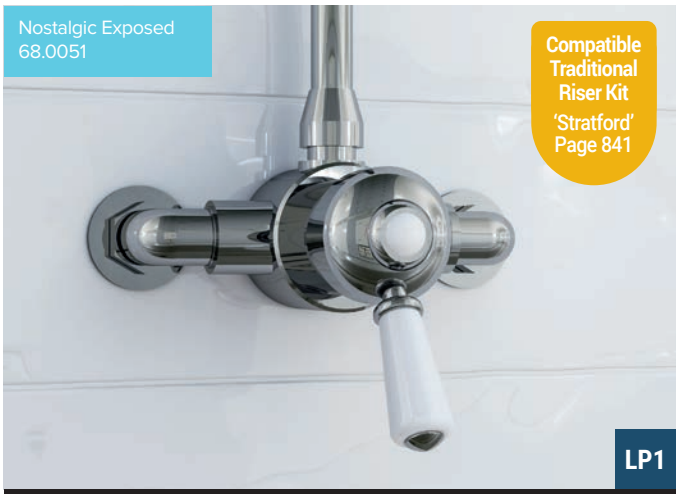

Compatible Traditional Riser Kit 'Stratford' Page 841

LP1

Nostalgic Single Lever Manual Shower Valve

Description	Code	€ Ex VAT	€ Inc VAT
Nostalgic Single Lever Manual Shower Valve	68.0051	209.00	**257.07**

Pressure LP1 (0.1 bar minimum)

- Chrome plated brass body
- Excellent flow rates at all pressures
- Ceramic disc cartridge technology
- Exposed valve has 150 centres

Nostalgic Concealed
68.0051



LP1

Pressure (bar)	Flow (litres/min)
0.1	7.3
0.2	9.6
0.5	13.8
1	18.2
2	22.5
3	26.5

Note: At maintained equal inlet pressures with open outlet at mid blend temperature

LP1 - 0.1 bar minimum
MP - 0.5 bar minimum
LP2 - 0.2 bar minimum

Shower Valves

On all items on this page

THERMOSTATIC SHOWER VALVES



68.0032 LP2

Thermostatic Lever Concealed Shower Valve

Description	Code	€ Ex VAT	€ Inc VAT
Thermostatic Lever Concealed Shower Valve	68.0032	576.00	**708.48**

Pressure LP2 (0.2 bar minimum)

- Chrome plated brass body
- Excellent flow rates at all pressures
- Ceramic disc cartridge technology
- Exposed valve has 150mm centres
- Thermostatic control, anti scald & override function



68.0031 LP2

Thermostatic Lever Exposed Shower Valve

Description	Code	€ Ex VAT	€ Inc VAT
Thermostatic Lever Exposed Shower Valve	68.0031	591.00	**726.93**

Pressure LP2 (0.2 bar minimum)

Pressure (bar)	Flow (litres/min)
0.2	9.3
0.5	12.3
1	14.4
2	17.1
3	20.6

Note: At maintained equal inlet pressures with open outlet at mid blend temperature

THERMOSTATIC CROSS HEAD VALVES

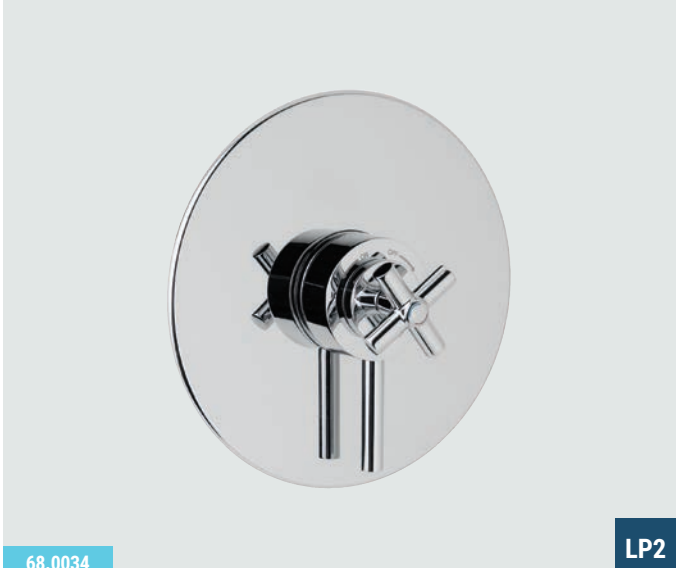

68.0034 LP2

Thermostatic Crosshead Concealed Shower Valve

Description	Code	€ Ex VAT	€ Inc VAT
Thermostatic Crosshead Concealed Shower Valve	68.0034	576.00	**708.48**

Pressure LP2 (0.2 bar minimum)

- Chrome plated brass body
- Excellent flow rates at all pressures
- Ceramic disc cartridge technology
- Exposed valve has 150mm centres
- Thermostatic control, anti scald & override function

LP2 - 0.2 bar minimum



68.0033 LP2

Thermostatic Crosshead Exposed Shower Valve

Description	Code	€ Ex VAT	€ Inc VAT
Thermostatic Crosshead Exposed Shower Valve	68.0033	591.00	**726.93**

Pressure LP2 (0.2 bar minimum)

Pressure (bar)	Flow (litres/min)
0.2	8.7
0.5	11.9
1	13.9
2	16.5
3	20.1

Note: At maintained equal inlet pressures with open outlet at mid blend temperature

Shower Valves

On all items on this page

TRADITIONAL THERMOSTATIC SHOWER VALVES

Elegance is the essence with the Traditional Valves, whether you prefer the appearance of the concealed or the exposed shower valve system. This high quality collection, with its excellence in both design and reliability, adds sophistication to any lifestyle.

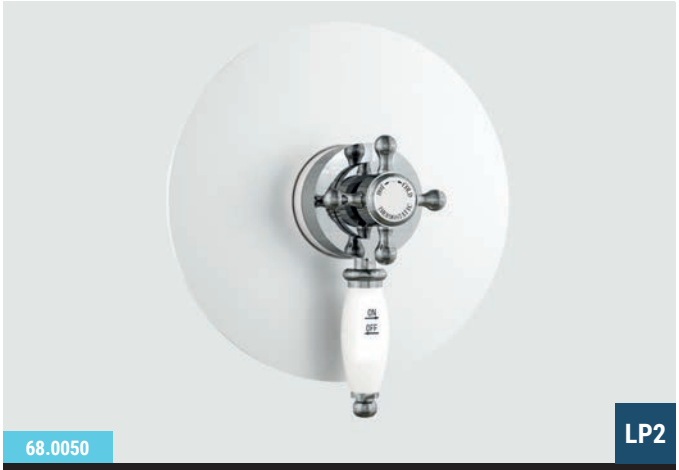

68.0050 LP2

Traditional Concealed Thermostatic Shower Valve

Description	Code	€ Ex VAT	€ Inc VAT
Traditional concealed thermostatic shower valve	68.0050	569.00	**699.87**

Pressure: LP2 (0.2 bar minimum)

- Chrome plated brass body
- Excellent flow rates at all pressures
- Ceramic disc cartridge technology
- Exposed valve has 150mm centres
- Thermostatic control, anti scald & override function



Compatible Traditional Riser Kit 'Stratford' Page 841

68.0049 LP2

Traditional Exposed Thermostatic Shower Valve

Description	Code	€ Ex VAT	€ Inc VAT
Traditional exposed thermostatic shower valve	68.0049	542.00	**666.66**

Pressure: LP2 (0.2 bar minimum)

Pressure (bar)	Flow (litres/min)
0.2	8.7
0.5	11.9
1	13.9
2	16.5
3	20.1

Note: At maintained equal inlet pressures with open outlet at mid blend temperature

TRADITIONAL THERMOSTATIC SHOWER VALVES

An elegant Edwardian-styled shower incorporating the latest technology. These valves are manufactured from solid brass and are suitable for use with all recognised installations including combination boilers and gravity systems. This high-performance shower comes complete with precise thermostatic control and an anti-scald device, making it extremely safe and simple to use.



68.0019 LP2

Thermostatic Traditional Concealed Shower Valve

Description	Code	€ Ex VAT	€ Inc VAT
Thermostatic traditional concealed shower valve	68.0019	705.00	**867.15**

Pressure: LP2 (0.2 bar minimum)

- Chrome plated brass body
- Excellent flow rates at all pressures
- Ceramic disc cartridge technology
- Exposed valve has 150mm centres
- Thermostatic control, anti scald & override function



Compatible Traditional Riser Kit 'Stratford' Page 841

68.0018 LP2

Thermostatic Traditional Exposed Shower Valve

Description	Code	€ Ex VAT	€ Inc VAT
Thermostatic traditional exposed shower valve	68.0018	738.00	**907.74**

Pressure: LP2 (0.2 bar minimum)

Pressure (bar)	Flow (litres/min)
0.2	8.7
0.5	11.9
1	13.9
2	16.5
3	20.1

Note: At maintained equal inlet pressures with open outlet at mid blend temperature

Shower Valves

TRADITIONAL EXPOSED TWIN THERMOSTATIC VALVE

Designed to coordinate with our taps and mixers, these quality, high performance valves are manufactured from solid brass. Separate flow and temperature controls mean the showers are easy to adjust and safe to use, making them ideal for a family environment. The valves are suitable for use with all recognised installations, including combination boilers and gravity systems.



Traditional Twin Exposed Thermostatic Shower Valve

Description	Code	€ Ex VAT	€ Inc VAT
Twin Exposed Shower Value	68.0048	594.00	**730.62**

Pressure: LP1 (0.1 bar minimum)

- Chrome plated brass body
- Excellent flow rates at all pressures
- Ceramic disc cartridge technology
- Exposed valve has 150mm centres
- Thermostatic control, anti scald & override function



Traditional Twin Exposed Thermostatic Shower Valve

Description	Code	€ Ex VAT	€ Inc VAT
Twin Exposed Shower Value	68.0047	594.00	**730.62**

Pressure: LP1 (0.1 bar minimum)

Pressure (bar)	Flow (litres/min)
0.1	7
0.2	8.6
0.5	11.7
1	13.5
2	16.5
3	20

Note: At maintained equal inlet pressures with open outlet at mid blend temperature

VERTICAL THERMOSTATIC SHOWER VALVE



Vertical Thermostatic Shower Valve Chrome

Description	Code	€ Ex VAT	€ Inc VAT
Vertical Thermostatic Shower Valve Chrome	93.0100	170.00	**209.10**

Pressure: LP1 (0.1 bar minimum)

- Chrome plated brass body
- Thermostatic control
- Ceramic disc cartridge technology
- Thermostatic control, anti scald & override function



Pressure (bar)	Flow (litres/min)
0.5	8.1
1	11.4
2	16.2
3	20.5

Note: At maintained equal inlet pressures with open outlet at mid blend temperature

Shower Valves



TRADITIONAL RISER KIT WITH TWIN VALVE



HP1

Traditional Riser Kit With Twin Valve

Description	Code	€ Ex VAT	€ Inc VAT
Traditional Riser with Twin Valve	93.0071	777.00	**955.71**

Pressure	HP1 (1 bar minimum)

FEATURES

Shower Kit

- 8" Brass chrome plated shower head.
- Polished stainless steel sliding bar.
- Single feature brass chrome plated shower handset.
- Stainless steel shower hose.

Shower Valve

- Chrome plated brass body.
- CD cartridge technology.
- Brass & Ceramic handles.
- Fixing centres 150mm
- Thermostatic control, Anti-scald & override function.
- On HP2, showerhead and handset can be operated simultaneously.

Pressure (bar)	Flow (litres/min)
1	12.5
2	18
3	22

Note: At maintained equal inlet pressures with open outlet at mid blend temperature.

LP1 - 0.1 bar minimum

HP1 - 1 bar minimum

MP - 0.5 bar minimum

Bar Valves

THERMOSTATIC BAR VALVES

Exposed bar valves in a range of styles and prices to suit all designs.



MP

Round Thermostatic Bar Valve Matt Smooth Black

Description	Code	€ Ex VAT	€ Inc VAT
Round Thermostatic Bar Valve Matt Smooth Black	93.0089	185.00	**227.55**

Pressure: MP (0.5 bar minimum)

- Excellent flow rates at all pressures
- Ceramic disc cartridge technology
- Thermostatic control, Anti-scald & override function.



MP

Round Thermostatic Bar Valve Chrome

Description	Code	€ Ex VAT	€ Inc VAT
Round Thermostatic Bar Valve Chrome	93.0025	178.00	**218.94**

Pressure: MP (0.5 bar minimum)

Pressure (bar)	Flow (litres/min)
0.5	8.8
1	12.6
2	18.1
3	22.2

Note: At maintained equal inlet pressures with open outlet at mid blend temperature

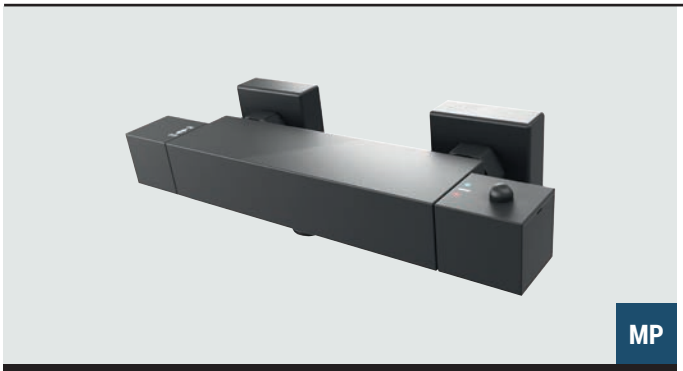

MP

Square Thermostatic Bar Valve Matt Smooth Black

Description	Code	€ Ex VAT	€ Inc VAT
Square Thermostatic Bar Valve Matt Smooth Black	93.0088	222.00	**273.06**

Pressure: MP (0.5 bar minimum)

- Excellent flow rates at all pressures
- Ceramic disc cartridge technology
- Thermostatic control, Anti-scald & override function.

MP - 0.5 bar minimum

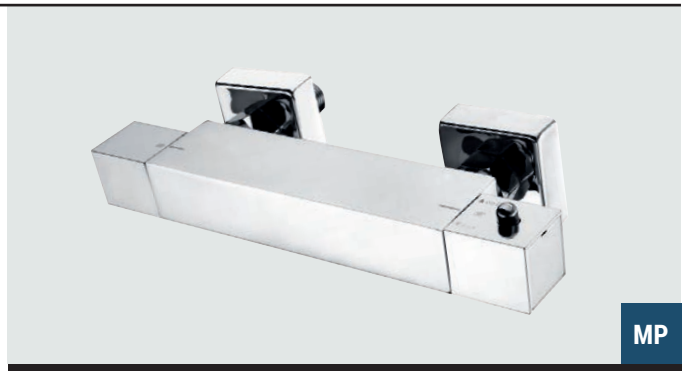

MP

Square Thermostatic Bar Valve Chrome

Description	Code	€ Ex VAT	€ Inc VAT
Square Thermostatic Bar Valve Chrome	93.0026	213.00	**261.99**

Pressure: MP (0.5 bar minimum)

Pressure (bar)	Flow (litres/min)
0.5	8.8
1	12.6
2	18.1
3	22.2

Note: At maintained equal inlet pressures with open outlet at mid blend temperature

ACCESSORIES



Backplate Elbow Unions

Description	Code	€ Ex VAT	€ Inc VAT
Backplate Elbow Unions	93.0060	34.00	**41.82**



Concealed Fixing Bracket

Description	Code	€ Ex VAT	€ Inc VAT
Concealed fixing bracket	68.0055	56.00	**68.88**

Bar Valves & Shower Shelves

CONTEMPORARY RISER SET



Contemporary Shower Riser Set with Bar Valve

Description	Code	€ Ex VAT	€ Inc VAT
Contemporary Shower Riser Set with Bar Valve	93.0116	185.00	**227.55**

Pressure	MP (0.5 bar minimum)

- Exposed valve has 150mm centres
- Thermostatic control, anti scald & override function

FEATURES

- Chrome plated brass body
- Slider rail with adjustable wall fixing brackets
- Excellent flow rates at all pressures
- CD cartridge technology
- Thermostatic control, anti scald function
- Six function handset
- Chrome plated soap holder

LUXURY SHOWER SHELVES



Shower Shelfs Inc Shower Kit Chrome

Description	Code	€ Ex VAT	€ Inc VAT
Shower Shelf inc shower kit	78.0023	265.00	**325.95**

FEATURES

- Stainless steel construction
- Polished finish
- Built-in oulet elbow
- Includes single function brass shower handset & stainless steel shower hose
- Requires shower valve
- Concealed rear inlet

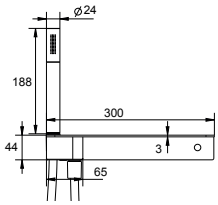



Shower Shelfs Inc Shower Kit Matt Smooth Black

Description	Code	€ Ex VAT	€ Inc VAT
Shower Shelf inc shower kit matt smooth black	78.0048	432.00	**531.36**

FEATURES

- Stainless steel construction
- Matt smooth black finish
- Built-in oulet elbow
- Includes single function brass shower handset & PVC shower hose
- Requires shower valve
- Concealed rear inlet

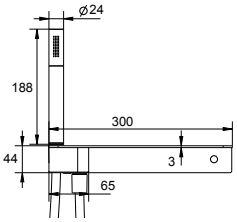

LP1 - 0.1 bar minimum **MP** - 0.5 bar minimum

Shower Poles





Modern Round Thermostatic Shower

Description	Code	€ Ex VAT	€ Inc VAT
Chrome	60.1001	314.00	**386.22**
Matt Black	60.1003	341.00	**419.43**
Brushed Brass	60.1005	359.00	**441.57**
Pressure			MP (0.5 bar minimum)

- PVD coated brass body
- Ceramic disc cartridge technology
- Thermostatic control
- Anti-scald & override function
- Exposed valve has 150mm centres
- Adjustable shower pole height 850mm to 1200mm

MODERN ROUND THERMOSTATIC SHOWER







Modern Square Thermostatic Shower

Description	Code	€ Ex VAT	€ Inc VAT
Chrome	60.1002	352.00	**432.96**
Matt Black	60.1004	387.00	**476.01**
Brushed Brass	60.1006	408.00	**501.84**
Pressure			MP (0.5 bar minimum)

- PVD coated brass body
- Ceramic disc cartridge technology
- Thermostatic control
- Anti-scald & override function
- Exposed valve has 150mm centres
- Adjustable shower pole height 850mm to 1200mm

MODERN SQUARE THERMOSTATIC SHOWER



MP - 0.5 bar minimum **HP1** - 1 bar minimum **HP1.5** - 1.5 bar minimum

Shower Poles

VEROLI THERMOSTATIC SHOWER SET WITH SHELF



HP1

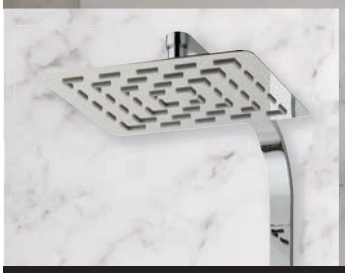

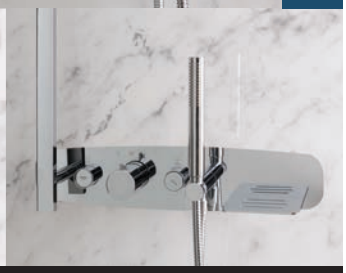

Veroli Thermostatic Shower Set With Shelf Chrome

Description	Code	€ Ex VAT	€ Inc VAT
Veroli Thermostatic Shower Set with shelf Chrome	78.0042	1221.00	**1501.83**
Pressure			HP1 (1 bar minimum)

FEATURES

- Thermostatic control
- Push button style diverters
- Practical built-in shelf
- Single function brass hand-set included

• Height	1048mm
• Backplate width	500mm
• Backplate height	110mm

THERMOSTATIC SHOWER POLE INC BAR VALVE & KIT



HP1.5

Thermostatic Shower Pole Inc Bar Valve & Kit

Description	Code	€ Ex VAT	€ Inc VAT
Thermostatic Shower Pole inc bar valve & kit	78.0035	640.00	**787.20**
Pressure			HP1.5 (1.5 bar minimum)

- Thermostatic control anti scald & override function

Thermostatic Shower Pole inc bar valve and kit • Adjustable height (800-1300mm)

- Solid brass construction
- Chrome finish
- 8" Stainless steel shower head (2mm thickness)
- Single function brass shower hand set
- Temperature controlled brass thermostatic bar valve with built-in diverter

MP - 0.5 bar minimum

HP1.5 - 1.5 bar minimum

HP1 - 1 bar minimum

Shower Poles

WINTERBOURNE SHOWER POLE



MP

Winterbourne Shower Pole

Description	Code	€ Ex VAT	€ Inc VAT
Winterbourne Shower Pole	56.2068	847.00	**1041.81**

Pressure	MP (0.5 bar minimum)

- Height (adjustable) 815-1150mm
- Fixing centres 150mm
- Chrome plated brass body
- Thermostatic control
- Ceramic disc cartridge technology
- Anti scald & override function

WINSLADE SHOWER POLE



MP

Winslade Shower Pole

Description	Code	€ Ex VAT	€ Inc VAT
Winslade Shower Pole	56.2069	625.00	**768.75**

Pressure	MP (0.5 bar minimum)

- Height (adjustable) 880-1160mm
- Fixing centres 150mm
- Chrome plated brass body
- Thermostatic control
- Ceramic disc cartridge technology
- Anti scald & override function

THERMOSTATIC SHOWER POLE

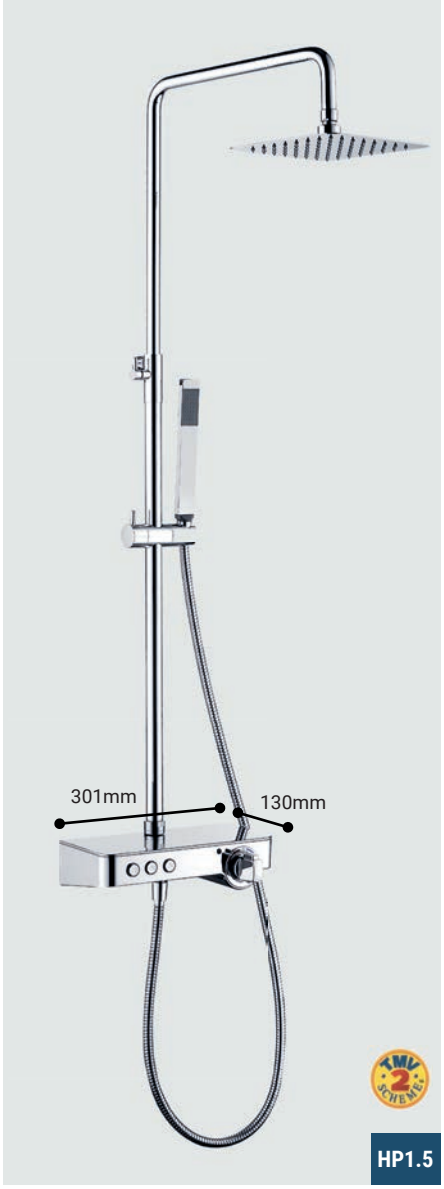

Thermostatic Shower Pole with built-in shelf

Thermostatic Shower Pole

Description	Code	€ Ex VAT	€ Inc VAT
Thermostatic Shower Pole	78.0014	817.00	**1004.91**

Pressure	HP1.5 (1.5 bar minimum)



Left Side Bottom Spout Foot Wash



Thermostatic Flow Control



Push Button Diverter Control

Riser Kits

RISER KITS



Slim Sliding Riser Kit

Description	Code	€ Ex VAT	€ Inc VAT
Slim Sliding Riser Kit	97.0006	101.00	**124.23**

Pressure: MP (0.5 bar minimum)

- Height 640mm
- Stainless steel rail construction
- Includes 3 function handset, shower hose & outlet elbow



Boston Slide Rail Kit

Description	Code	€ Ex VAT	€ Inc VAT
Boston slide rail kit	56.2020	159.00	**195.57**

Pressure: LP1 (0.1 bar minimum)

- Fixing Centres 531mm



Kubix Slider Rail Kit Chrome

Description	Code	€ Ex VAT	€ Inc VAT
Kubix Slider Rail Kit Chrome	93.0042	159.00	**195.57**

Pressure: LP1 (0.1 bar minimum)

- Height 640mm
- Stainless steel rail construction
- Includes single function handset, shower hose & outlet elbow



Sheer Rectangular Slide Rail Chrome

Description	Code	€ Ex VAT	€ Inc VAT
Sheer Rectangular Slide Rail Chrome	93.0045	154.00	**189.42**

Pressure: LP1 (0.1 bar minimum)

- Height 700mm
- Stainless steel rail construction
- Includes single function handset, shower hose & outlet elbow
- Chrome finish



Swivel Sliding Riser Kit

Description	Code	€ Ex VAT	€ Inc VAT
Swivel Sliding Riser Kit	97.0004	98.00	**120.54**

Pressure: MP (0.5 bar minimum)

- Height 570mm
- Includes 5 function handset & shower hose
- Chrome finish



Memphis Slide Rail Kit

Description	Code	€ Ex VAT	€ Inc VAT
Memphis slide rail kit	56.2021	149.00	**183.27**

Pressure: LP1 (0.1 bar minimum)

- Fixing centres 265mm

MP - 0.5 bar minimum

LP1 - 0.1 bar minimum

Riser Kits

RISER KITS



Needle Sliding Riser Kit

Description	Code	€ Ex VAT	€ Inc VAT
Needle Sliding Riser Kit	97.0005	80.00	**98.40**

Pressure LP1 (0.1 bar minimum)

- Height 610mm
- Stainless steel rail construction
- Includes single function handset & shower hose
- Chrome finish



Riser Kit With Round Soap Dish

Description	Code	€ Ex VAT	€ Inc VAT
Riser Kit with Round Soap Dish Chrome	102.001	91.00	**111.93**

Pressure MP (0.5 bar minimum)

- Height 617mm
- Stainless steel sliding bar
- Includes three function handset and stainless steel shower hose
- Chrome finish



Riser Kit With Rectangular Soap Dish

Description	Code	€ Ex VAT	€ Inc VAT
Riser Kit with Rectangular Soap Dish Chrome	102.002	112.00	**137.76**

Pressure MP (0.5 bar minimum)

- Height 700mm
- Stainless steel sliding bar
- Includes single function handset and stainless steel shower hose
- Chrome finish



Dual Sliding Shower Riser Kit

Description	Code	€ Ex VAT	€ Inc VAT
Dual Sliding Shower Riser Kit	97.0003	121.00	**148.83**

Pressure LP1 (0.1 bar minimum)

- Height 600mm
- Includes only one 3-function handset & shower hose
- Chrome finish



New Breeze Rigid Riser Kit

Description	Code	€ Ex VAT	€ Inc VAT
New Breeze Rigid Riser Kit	97.0001	205.00	**252.15**

Pressure HP2 (2 bar minimum)

- Height 1073mm
- Includes single function handset, shower hose & outlet elbow
- Chrome finish

Riser Kits

RISER KITS



MP

Adjustable Slide Rail Kit Matt Smooth Black

Code	€ Ex VAT	€ Inc VAT
93.0099	98.00	**120.54**

Pressure MP (0.5 bar minimum)

- Height 640mm
- Includes 3 function handset & PVC shower hose



MP

Adjustable Slide Rail Kit Chrome

Code	€ Ex VAT	€ Inc VAT
93.0046	87.00	**107.01**

Pressure MP (0.5 bar minimum)

- Height 640mm
- Stainless steel rail construction
- Includes 3 function handset & shower hose
- Chrome finish



LP1

Linear Slide Rail Kit Chrome

Code	€ Ex VAT	€ Inc VAT
93.0044	101.00	**124.23**

Pressure LP1 (0.1 bar minimum)

- Height 600mm
- Stainless steel rail construction
- Includes single function handset, shower hose & outlet elbow
- Chrome finish



MP

Curved Sliding Riser Kit

Code	€ Ex VAT	€ Inc VAT
97.0002	107.00	**131.61**

Pressure MP (0.5 bar minimum)

- Height 540mm
- Includes 5 function handset, shower hose & outlet elbow
- Chrome finish



Soap Holder for Slide Rail 93.0046

Description	Code	€ Ex VAT	€ Inc VAT
Soap Holder for Slide Rail 93.0046	93.0070	20.00	**24.60**

Only compatible with: 93.0046



Soap Holder for Slide Rail 93.0099

Description	Code	€ Ex VAT	€ Inc VAT
Soap Holder for Slide Rail 93.0099	93.0098	21.00	**25.83**

Only compatible with 93.0099



Soap Holder for Slide Rail 93.0044 Chrome

Description	Code	€ Ex VAT	€ Inc VAT
Soap Holder for Slide Rail 93.0044 Chrome	93.0047	20.00	**24.60**

Only compatible with: 93.0044

Shower Panels

ARDOUR SHOWER PANEL



HP1

LP1	- 0.1 bar minimum	HP1.5	- 1.5 bar minimum
MP	- 0.5 bar minimum	HP2	- 2 bar minimum
HP1	- 1 bar minimum		

Ardour Shower Panel

Description	Code	€ Ex VAT	€ Inc VAT
Ardour Shower Panel - Black	80.0004	492.00	**605.16**

Pressure	HP1
• Height	1500mm

- Includes thermostatic valve
- Easy installation
- Includes square body jets, fixed head & round flexible handset

Shower Panels

DERWENT SHOWER PANEL



Derwent Shower Panel

Description	Code	€ Ex VAT	€ Inc VAT
Derwent Shower Panel - Black	80.0003	486.00	**597.78**
Pressure	HP1		
Height	1500mm		

FEATURES
- Includes thermostatic valve
- Easy installation
- Includes round body jets, fixed head & round flexible handset

LP1	- 0.1 bar minimum
MP	- 0.5 bar minimum
HP1	- 1 bar minimum
HP1.5	- 1.5 bar minimum
HP2	- 2 bar minimum

Shower Panels

CONWAY SHOWER PANEL



Conway Shower Panel

Description	Code	€ Ex VAT	€ Inc VAT
Conway Shower Panel	80.0002	511.00	**628.53**
Pressure	HP1		
Height	1600mm		

FEATURES

- Brushed stainless steel
- Includes thermostatic valve
- Easy installation
- Includes built-in body jets, fixed head & flexible handset

LP1	- 0.1 bar minimum
MP	- 0.5 bar minimum
HP1	- 1 bar minimum
HP1.5	- 1.5 bar minimum
HP2	- 2 bar minimum

Rail Kits & Accessories

RAIL KITS



Curved X Slide Rail Kit

Description	Code	€ Ex VAT	€ Inc VAT
Curved X Slide Rail Kit	78.0015	230.00	**282.90**

- Height 800mm
- Solid brass construction
- Chrome finish



Curved Mini Slide Rail Kit

Description	Code	€ Ex VAT	€ Inc VAT
Curved Mini Slide Rail Kit	78.0016	126.00	**154.98**

- Height 680mm
- Stainless steel & brass construction
- Chrome finish





93.0069



93.0061

Traditional Slide Rail Kit Chrome

Description	Code	€ Ex VAT	€ Inc VAT
Traditional Slide Rail Kit only Chrome	93.0048	163.00	**200.49**

- Height 600mm
- Solid brass construction
- Chrome finish

Description	Code	€ Ex VAT	€ Inc VAT
Traditional Shower Handset	93.0069	44.00	**54.12**
1.5m Shower Flexible Hose - 8mm Bore	93.0061	21.00	**25.83**



Rectangular Mini Slide Rail Kit

Description	Code	€ Ex VAT	€ Inc VAT
Rectangular Mini Slide Rail Kit	78.0017	84.00	**103.32**

- Height 685mm
- Chrome finish



Rectangular X Slide Rail Kit

Description	Code	€ Ex VAT	€ Inc VAT
Rectangular X Slide Rail Kit	78.0018	126.00	**154.98**

- Height 700mm
- Stainless steel & brass construction
- Chrome finish



Soap Holder

Description	Code	€ Ex VAT	€ Inc VAT
Soap Holder	78.0036	20.00	**24.60**

- Only compatible with: 78.0016, 78.0017 & 78.0018

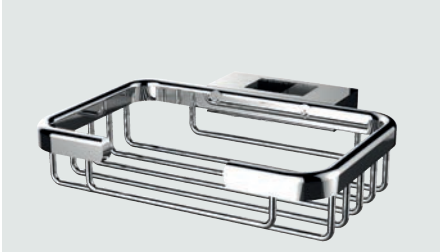

Soap Holder Chrome

Description	Code	€ Ex VAT	€ Inc VAT
Soap Holder Chrome	78.0041	69.00	**84.87**

- Only compatible with: 78.0016, 78.0017 & 78.0018

Stratford Riser Kits

STRATFORD TRADITIONAL RISER KITS





Adjustable distance from wall.
Suitable to be fitted with all 68 code exposed shower valves.

The above applies for 68.0057 & 68.0058.

Stratford Traditional Riser Kit

Description	Code	€ Ex VAT	€ Inc VAT
Stratford Traditional Riser Kit	68.0057	188.00	**231.24**

- Adjustable height 843-1163mm
- Solid brass construction
- Chrome finish



Stratford Traditional Riser Kit with Diverter & Shower Kit

Description	Code	€ Ex VAT	€ Inc VAT
Stratford Traditional Riser Kit with Diverter & Shower Kit	68.0058	446.00	**548.58**

- Adjustable height 1041-1361mm
- Solid brass construction
- Chrome/white finish



Please choose your shower valve and shower head below:

Compatible Shower **Valves**	Page Number
68.0018	826
68.0047	827
68.0048	827

Compatible Shower **Valves**	Page Number
68.0049	826
68.0051	824

Compatible Shower **Valves**	Page Number
98.0009	850
98.0027	850

Shower Handsets

SHOWER HANDSETS

SPRAY TYPES

- Full Spray
- Massage
- Spray/Massage
- Spray/Misty
- Oxygenic
- Misty
- Dot Massage
- Water Saving Drizzle
- Strong Spray
- Spray/Dot Massage



Minimalist Square Handset

Code	€ Ex VAT	€ Inc VAT
98.0016	21.00	**25.83**

- Single function
- Chrome finish



Needle Shower Handset

Code	€ Ex VAT	€ Inc VAT
97.0018	24.00	**29.52**

- Single function
- Chrome finish



Type 85 Shower Handset

Code	€ Ex VAT	€ Inc VAT
97.0011	31.00	**38.13**

- Single function
- Chrome finish



Type 35 Shower Handset

Code	€ Ex VAT	€ Inc VAT
97.0021	20.00	**24.60**

- Single function
- Chrome finish



Type 45 Shower Handset

Code	€ Ex VAT	€ Inc VAT
97.0023	24.00	**29.52**

- Single function
- Chrome finish



Type 40 Shower Handset

Code	€ Ex VAT	€ Inc VAT
97.0022	20.00	**24.60**

- Single function
- Chrome finish







Round Shower Handset

Code	€ Ex VAT	€ Inc VAT
78.0040	76.00	**93.48**

- Solid brass construction, • Chrome finish
- 2 functions



Type 50 Shower Handset

Code	€ Ex VAT	€ Inc VAT
97.0024	23.00	**28.29**

- Single function
- Chrome finish

NEW



* Available February 2023

Modern Round Shower Handset

Code	€ Ex VAT	€ Inc VAT
60.1031	14.00	**17.22**

- Single function
- Chrome finish

NEW



Modern Round Shower Handset

Code	€ Ex VAT	€ Inc VAT
60.1024	17.00	**20.91**

- Single function
- Brushed Brass finish

* Available February 2023

Modern Square Shower Handset

Code	€ Ex VAT	€ Inc VAT
60.1044	19.00	**23.37**

- Single function
- Brushed Brass finish

* Available February 2023

NEW



Shower Handsets

SHOWER HANDSETS



Type 15 Shower Handset

Code	€ Ex VAT	€ Inc VAT
97.0013	20.00	**24.00**

- 5 functions
- Chrome finish



Type 60 Shower Handset

Code	€ Ex VAT	€ Inc VAT
97.0009	28.00	**34.44**

- 5 functions
- Chrome finish



Type 65 Shower Handset

Code	€ Ex VAT	€ Inc VAT
97.0016	30.00	**36.90**

- 5 functions
- Chrome finish



Type 70 Shower Handset

Code	€ Ex VAT	€ Inc VAT
97.0017	37.00	**45.51**

- 3 functions
- Chrome finish



Type 75 Shower Handset

Code	€ Ex VAT	€ Inc VAT
97.0020	38.00	**46.74**

- 4 functions
- Chrome finish



Type 80 Shower Handset

Code	€ Ex VAT	€ Inc VAT
97.0019	27.00	**33.21**

- Single function
- Chrome finish

SPRAY TYPES

- Full Spray
- Massage
- Spray/Massage
- Spray/Misty
- Oxygenic
- Misty
- Dot Massage
- Water Saving Drizzle
- Strong Spray
- Spray/Dot Massage



Traditional Type 10 Shower Handset

Code	€ Ex VAT	€ Inc VAT
98.0015	37.00	**45.51**

- Single function
- White & chrome finish
- Traditional design



Round Shower Handset

Code	€ Ex VAT	€ Inc VAT
78.0039	37.00	**45.51**

- Solid brass construction
- Single function
- Chrome finish



Traditional Shower Handset

Code	€ Ex VAT	€ Inc VAT
93.0069	44.00	**54.12**

- Single function
- White & chrome finish
- Traditional design



Type 90 Shower Handset

Code	€ Ex VAT	€ Inc VAT
78.0037	138.00	**169.74**

- Single function
- Brass construction, white & chrome finish
- Ultra thin design



Modern Round Shower Handset

Code	€ Ex VAT	€ Inc VAT
60.1011	12.00	**14.76**

- Single function
- Chrome finish

* Available February 2023



Shower Handsets & Hoses

SHOWER HAND SET

SPRAY TYPES

- Full Spray
- Massage
- Spray/Massage
- Spray/Misty
- Oxygenic
- Misty
- Dot Massage
- Water Saving Drizzle
- Strong Spray
- Spray/Dot Massage



Type 15 Shower Handset Matt Smooth Black

Code	€ Ex VAT	€ Inc VAT
78.0054	69.00	**84.87**

- Single function
- Matt smooth black finish
- Solid brass construction



Type 20 Shower Handset Matt Smooth Black

Code	€ Ex VAT	€ Inc VAT
78.0055	62.00	**76.26**

- Single function
- Matt smooth black finish
- Solid brass construction



Type 95 Shower Handset Matt Smooth Black

Code	€ Ex VAT	€ Inc VAT
78.0051	34.00	**41.82**

- Single function
- Matt smooth black finish



Type 100 Shower Handset Matt Smooth Black

Code	€ Ex VAT	€ Inc VAT
78.0052	30.00	**36.90**

- Single function
- Matt smooth black finish



Modern Round shower Handset Matt Black

Code	€ Ex VAT	€ Inc VAT
60.1017	16.00	**19.68**

- Single function
- Matt smooth black finish

* Available February 2023



Modern Square shower Handset Matt Black

Code	€ Ex VAT	€ Inc VAT
60.1037	17.00	**20.91**

- Single function
- Matt smooth black finish

* Available February 2023

FLEXIBLE SHOWER HOSES

Flexible Shower Hoses

Description	Code	€ Ex VAT	€ Inc VAT
1.5m Shower Flexible Hose - 8mm Bore	93.0061	21.00	**25.83**
2m Shower Flexible Hose - 8mm Bore	93.0062	21.00	**25.83**
1.5m Shower Flexible Hose - 10mm Bore	93.0063	27.00	**33.21**
2m Shower Flexible Hose - 10mm Bore	93.0064	28.00	**34.44**
1.5m PVC Shower Hose Matt Smooth Black - 6mm Bore	93.0102	27.00	**33.21**

Flexible Shower Hoses

Description	Code	€ Ex VAT	€ Inc VAT
1.5m PVC Shower Hose Matt Smooth Black - 6mm Bore	93.0102	27.00	**33.21**
2m PVC Shower Hose Matt Smooth Black - 6mm Bore	93.0103	30.00	**36.90**
1.5m Modern Flexible Shower Hose - Chrome - 8mm Bore	60.1013	12.00	**14.76**
1.5m Modern Flexible Shower Hose - Matt Black - 8mm Bore	60.1019	14.00	**17.22**
1.5m Modern Flexible Shower Hose - Brushed Brass - 8mm Bore	60.1026	14.00	**17.22**



93.0061 & 93.0063
8mm & 10mm Bore



60.1013 8mm bore



93.0102 6mm bore



60.1019 8mm bore



93.0062 & 93.0064
8mm & 10mm Bore



93.0103 6mm bore



60.1026 8mm bore

Wall & Ceiling Mounted Showers

Waterfall Shower Ceiling Mounted - Single

Stainless steel ceiling-mounted shower with rainfall and waterfall features.

Description	Code	€ Ex VAT	€ Inc VAT
Waterfall Shower Ceiling Mounted - Single	78.0029	1204.00	**1480.92**

FEATURES

- Stainless steel construction
- Flush ceiling fitting
- Single waterfall outlet
- Rainfall outlet

CEILING MOUNTED WATERFALL SHOWERS



HP1.5

Waterfall Shower Ceiling Mounted - Double

Description	Code	€ Ex VAT	€ Inc VAT
Waterfall Shower Ceiling Mounted - Double	78.0030	1294.00	**1591.62**

FEATURES

- Stainless steel construction
- Flush ceiling fitting
- Double waterfall outlet
- Rainfall outlet

Requires fixing to a substantial fixing point.
Requires a diverter shower valve.



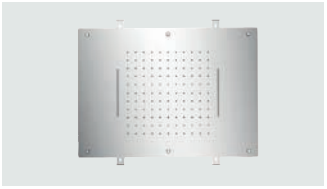



78.0030

WALL MOUNTED WATERFALL SHOWERS

Wall-mounted shower with waterfall Stainless

Stainless steel wall-mounted double outlet shower heads with rainfall and waterfall features.

Description	Code	€ Ex VAT	€ Inc VAT
Wall-mounted shower with waterfall	78.0007	881.00	**1083.63**



HP1.5

Wall-mounted shower with waterfall Stainless

Description	Code	€ Ex VAT	€ Inc VAT
Wall-mounted ashower with waterfalla	78.0006	854.00	**1050.42**

FEATURES

- Stainless steel construction
- Wall mounted
- Waterfall outlet
- Rainfall outlet

Requires fixing to a substantial fixing point.
Requires a diverter shower valve.



HP1.5



78.0006

HP1.5 - 1.5 bar minimum

Shower Arms

CEILING MOUNTED SHOWER ARMS

Ceiling Mounted Shower Arms

Description	Code	€ Ex VAT	€ Inc VAT
Round Shower Arm 160mm Chrome	93.0114	37.00	**45.51**
Round Shower Arm 160mm Matt Smooth Black	93.0115	41.00	**50.43**
Square Shower Arm 200mm Chrome	78.0010	52.00	**63.96**
Round Shower Arm 200mm Chrome	78.0011	41.00	**50.43**
Round Shower Arm 200mm Matt Smooth Black	78.0045	49.00	**60.27**



93.0114



93.0115

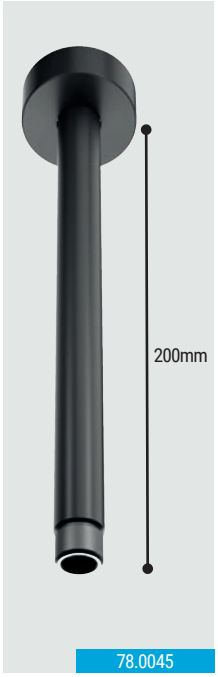

78.0045

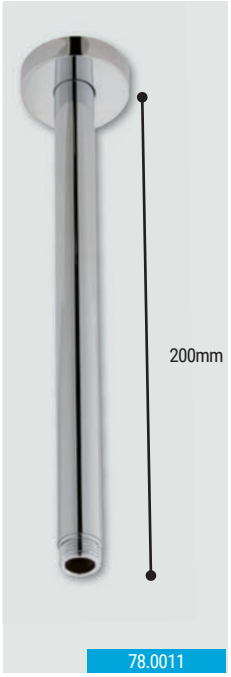

78.0011

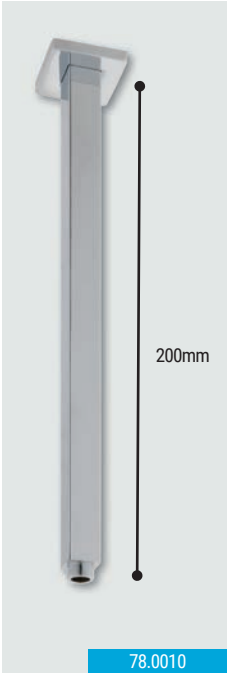

78.0010

WALL MOUNTED SHOWER ARMS

NEW

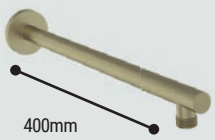

* Available February 2023

Modern Round Fixed Over Head Shower

Description	Code	€ Ex VAT	€ Inc VAT
Modern Round Fixed over Head Shower Arm Brushed Brass	60.1021	27.00	**33.21**

- Outlet to wall 400mm
- Stanless Steel Material, brushed brass finish

NEW

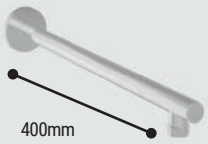

* Available February 2023

Modern Round Fixed Over Head Shower

Description	Code	€ Ex VAT	€ Inc VAT
Modern Round Fixed over Head Shower Arm Chrome	60.1007	24.00	**29.52**

- Outlet to wall 400mm
- Stanless Steel Material, chrome finish

NEW



* Available February 2023

Modern Round Fixed Over Head Shower

Description	Code	€ Ex VAT	€ Inc VAT
Modern Round Fixed over Head Shower Arm Matt Black	60.1014	26.00	**31.98**

- Outlet to wall 400mm
- Stanless Steel Material, matt black finish



78.0046 & 93.0094

Shower Heads page 836-387

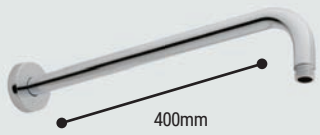

Round Offset Shower Arm Chrome

Description	Code	€ Ex VAT	€ Inc VAT
Round Offset Shower Arm Ø22 x 400mm	78.0012	56.00	**68.88**

- Outlet to wall 400mm
- Solid brass construction, chrome finish

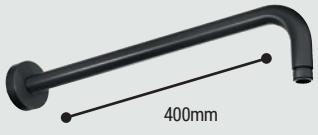

Round Offset Shower Arm Matt Smooth Black

Description	Code	€ Ex VAT	€ Inc VAT
Round Offset Shower Arm Matt Smooth Black	78.0046	77.00	**94.71**

- Outlet to wall 400mm
- Solid brass construction



Wall Mounted Arm

Code	€ Ex VAT	€ Inc VAT
98.0025	31.00	**38.13**

- Outlet to wall 200mm
- Solid brass construction, chrome finish

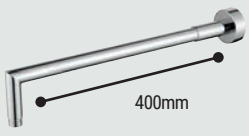

Round Wall Arm

Code	€ Ex VAT	€ Inc VAT
78.0022	58.00	**71.34**

- Outlet to wall 400mm
- Solid brass construction, chrome finish



Wall Mounted Arm

Code	€ Ex VAT	€ Inc VAT
98.0024	40.00	**49.20**

- Outlet to wall 345mm
- Solid brass construction, chrome finish

Shower Arms

WALL MOUNTED SHOWER ARMS





Square X Shower Arm

Description	Code	€ Ex VAT	€ Inc VAT
Square X Shower Arm	78.0019	167.00	**205.41**

- Outlet to wall 370mm
- Solid brass construction, chrome finish



Square Wall Arm

Description	Code	€ Ex VAT	€ Inc VAT
Square Wall Arm	78.0020	124.00	**152.52**

- Outlet to wall 360mm
- Solid brass construction

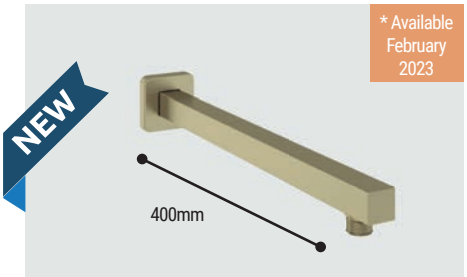

Modern Square Fixed Over Head Shower Arm

Description	Code	€ Ex VAT	€ Inc VAT
Square Wall Arm	60.1041	34.00	**41.82**

- Outlet to wall 400mm
- Stainless Steel construction, brushed brass

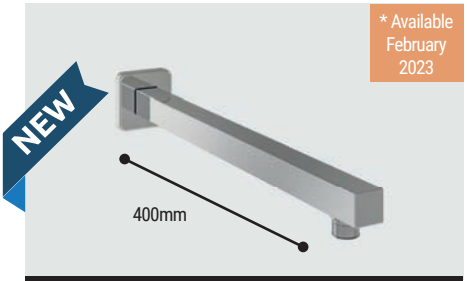

Modern Square Fixed Over Head Shower Arm

Description	Code	€ Ex VAT	€ Inc VAT
Modern Square Wall Arm	60.1027	30.00	**36.90**

- Outlet to wall 400mm
- Stainless Steel construction, chrome finish



Modern Square Fixed Over Head Shower Arm

Description	Code	€ Ex VAT	€ Inc VAT
Square Wall Arm	60.1034	31.00	**38.13**

- Outlet to wall 400mm
- Stainless Steel construction, matt black finish



Square L Shower Arm Matt Smooth Black

Description	Code	€ Ex VAT	€ Inc VAT
Square L Shower Arm	78.0047	195.00	**239.85**

- Outlet to wall 360mm
- Solid brass construction

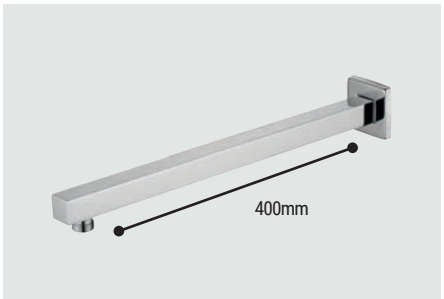

Square Wall Arm

Description	Code	€ Ex VAT	€ Inc VAT
Square Wall Arm	78.0021	91.00	**111.93**

- Outlet to wall 400mm
- Solid brass construction, chrome finish



Square Wall Mounted Arm 200mm

Description	Code	€ Ex VAT	€ Inc VAT
Square Wall Mounted Arm	98.0023	51.00	**62.73**

- Outlet to wall 200mm
- Solid brass construction, chrome finish



Shower Arm

Description	Code	€ Ex VAT	€ Inc VAT
Shower Arm	98.0026	83.00	**102.09**

- Outlet to wall 172mm
- Solid brass construction, chrome finish



Swivel Shower Arm Chrome

Description	Code	€ Ex VAT	€ Inc VAT
Swivel Shower Arm Chrome	93.0101	96.00	**118.08**

- Solid brass construction, chrome finish
- Outlet to wall 402mm

Choose your shower arm from above and then see pages 848-850 for compatible shower heads.



Shower Heads

SHOWER HEADS - CHROME

NEW

* Available February 2023

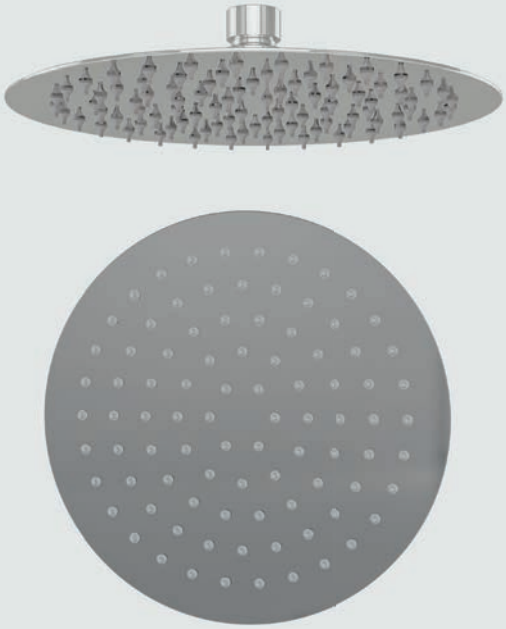

ø200mm

* Available February 2023

60.1008

Shower Head Chrome Finish

Description	Code	€ Ex VAT	€ Inc VAT
8" Round shower head	78.0001	111.00	**136.53**
8" Square shower head	78.0003	121.00	**148.83**
8" Round Fixed Over Head Shower Head	60.1008	31.00	**38.13**
8" Square Fixed Over Head Shower Head	60.1028	31.00	**38.13**

WRAS



ø200mm

78.0001

MP

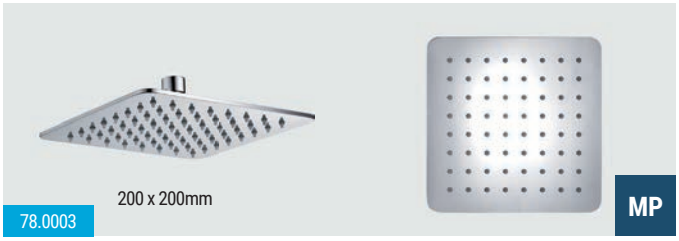

200 x 200mm

78.0003

MP

NEW

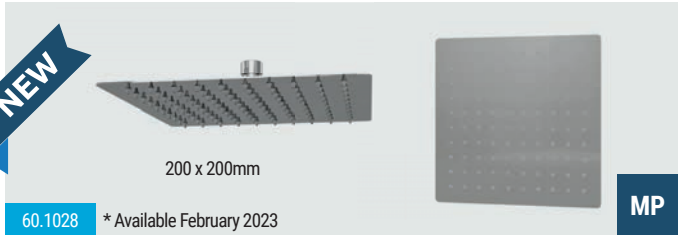

200 x 200mm

60.1028 * Available February 2023

MP

FEATURES

- Stainless steel one piece construction
- Polished (chrome effect) finish
- Rainfall outlet
- 4mm thickness

Pressure	MP (0.5 bar minimum)

SHOWER HEADS - CHROME

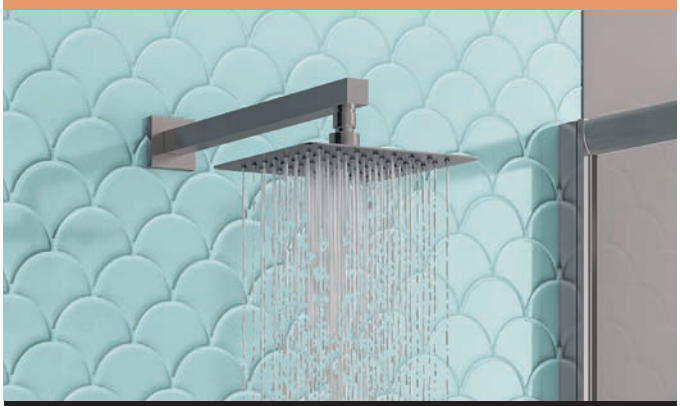

Shower Heads Chrome Finish

Description	Code	€ Ex VAT	€ Inc VAT
12" Round shower head	78.0002	245.00	**301.35**
12" Square shower head	78.0004	272.00	**334.56**
8" x 12" Rectangle shower head	78.0005	212.00	**260.76**

FEATURES

- Stainless steel one piece construction
- Polished (chrome effect) finish
- Rainfall outlet
- 4mm thickness

Pressure	MP (0.5 bar minimum)

WRAS

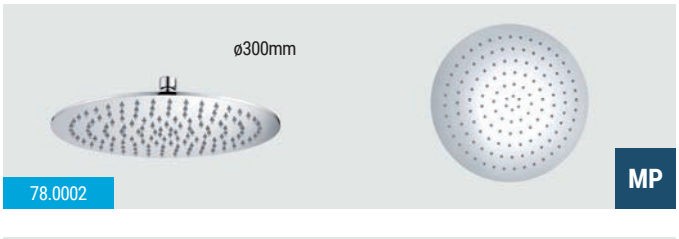

ø300mm

78.0002

MP

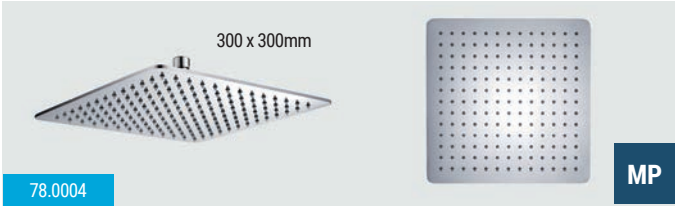

300 x 300mm

78.0004

MP

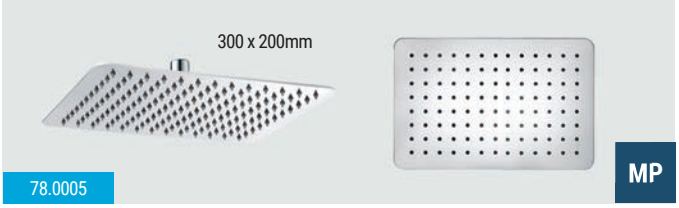

300 x 200mm

78.0005

MP

MP - 0.5 bar minimum

Shower Heads

WRAS

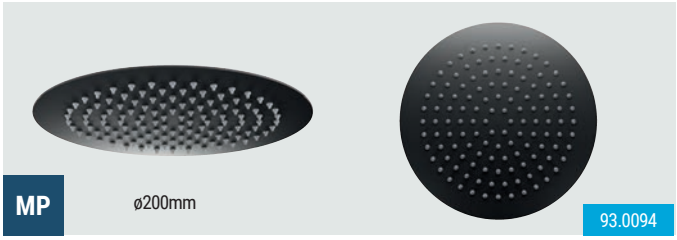

MP ø200mm 93.0094

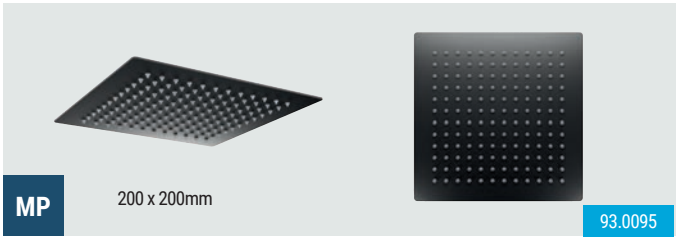

MP 200 x 200mm 93.0095

NEW

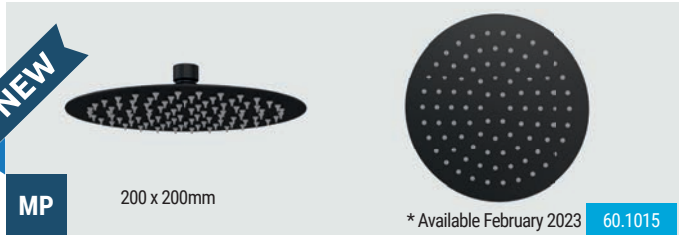

MP 200 x 200mm * Available February 2023 60.1015

SHOWER HEADS - SMOOTH BLACK

* Available February 2023

NEW



MP 200 x 200mm * Available February 2023 60.1035

FEATURES
- Brass construction
- Matt smooth black finish
- Rainfall outlet

Pressure	MP (0.5 bar minimum)

Shower Head Smooth Black Finish

Description	Code	€ Ex VAT	€ Inc VAT
8" Round Shower Head - Smooth Black	93.0094	112.00	**137.76**
8" Square Shower Head - Smooth Black	93.0095	121.00	**148.83**
8" Round Fixed Over Head Shower Head - Smooth Black	60.1015	34.00	**41.82**
8" Square Fixed Over Head Shower Head - Smooth Black	60.1035	37.00	**45.51**

WRAS

NEW

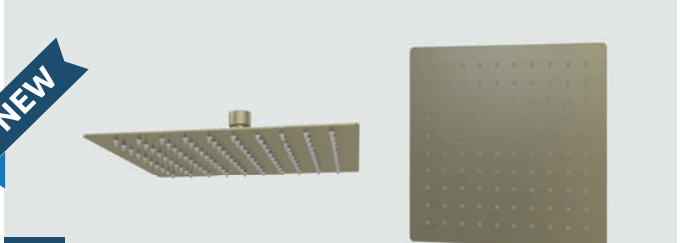

MP 60.1042

Shower Heads Brushed Brass Finish

Description	Code	€ Ex VAT	€ Inc VAT
8" Round Fixed Over Head Shower Head - Brushed Brass	60.1022	40.00	**49.20**
8" Square Fixed Over Head Shower Head - Brushed Brass	60.1042	40.00	**49.20**

FEATURES
- PDV coated finish
- Brass construction
- Brushed Brass finish
- Rainfall outlet

Pressure	MP (0.5 bar minimum)

* Available February 2023

MP - 0.5 bar minimum

SHOWER HEADS - BRUSHED BRASS

NEW

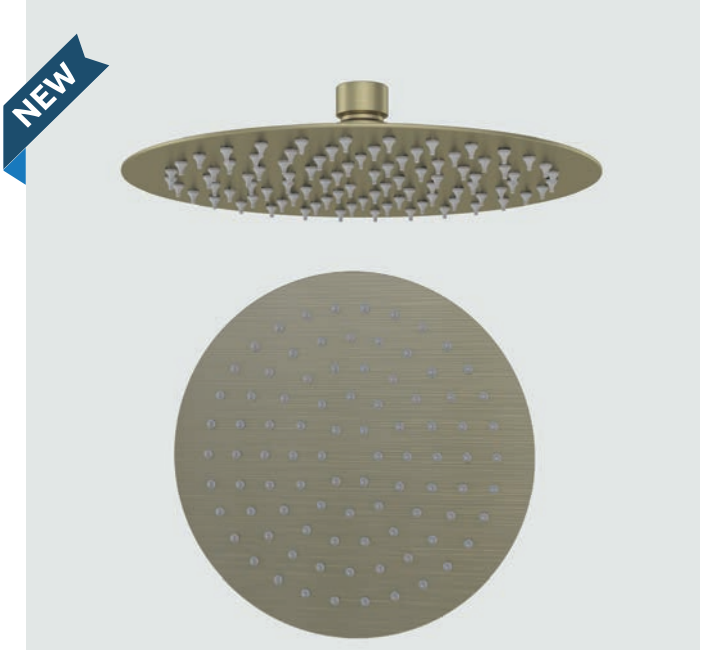

MP ø200mm 60.1022

Shower Heads

SHOWER HEADS

SPRAY TYPES

- Full Spray
- Massage
- Spray/Massage
- Spray/Misty
- Oxygenic
- Misty
- Dot Massage
- Water Saving Drizzle
- Strong Spray
- Spray/Dot Massage



Type 10 Shower Head

Code	€ Ex VAT	€ Inc VAT
97.0010	26.00	**31.98**

- Chrome plated
- 5 functions



Type 15 Shower Head

Code	€ Ex VAT	€ Inc VAT
97.0012	37.00	**45.51**

- Chrome plated
- 2 functions



Type 20 Shower Head

Code	€ Ex VAT	€ Inc VAT
97.0014	26.00	**31.98**

- Chrome plated
- 5 functions



Type 25 Shower Head

Code	€ Ex VAT	€ Inc VAT
97.0015	30.00	**36.90**

- Chrome plated
- 5 functions



Type 30 Shower Head

Code	€ Ex VAT	€ Inc VAT
97.0025	44.00	**54.12**

- Chrome plated
- Single function / 9” shower head

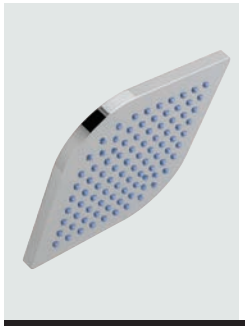

Type 35 Shower Head

Code	€ Ex VAT	€ Inc VAT
97.0026	80.00	**98.40**

- Chrome plated
- Single function / 10” shower head



ø200mm



MP

Traditional 8” Shower Rose & Arm Chrome

Code	€ Ex VAT	€ Inc VAT
93.0051	59.00	**72.57**

- Includes shower arm, chrome finish



Type 45 Shower Head

Code	€ Ex VAT	€ Inc VAT
97.0028	80.00	**98.40**

- Chrome plated
- 2 functions / 10” shower head

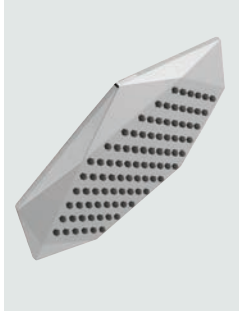

Type 40 Shower Head

Code	€ Ex VAT	€ Inc VAT
97.0027	70.00	**86.10**

- Chrome plated
- Single function / 11” shower head

ø200mm



Compatible Traditional Riser Kit ‘Stratford’ Page 841

MP - 0.5 bar minimum

Compatible Traditional Riser Kit ‘Stratford’ Page 841

ø152mm



Tec 8” Fixed Head

Code	€ Ex VAT	€ Inc VAT
98.0009	138.00	**169.74**

MP

- Solid brass construction, chrome finish

Tec 6” Fixed Head

Code	€ Ex VAT	€ Inc VAT
98.0027	118.00	**145.14**

- Solid brass construction, chrome finish

MP

Body Jets & Shower Seats

BODY JETS



Body Jets: 78.0031 x6. Valve: 68.0004, 68.0024 & 68.0046 x3



78.0031

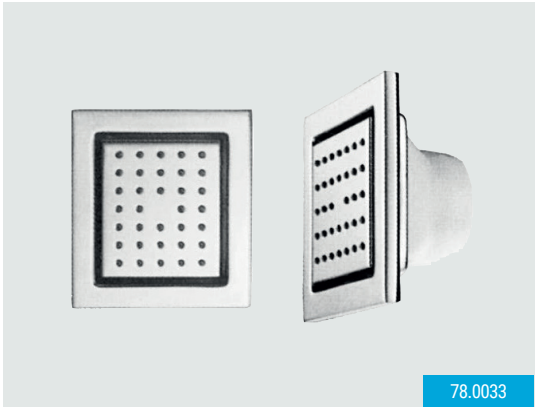

78.0033



78.0032



78.0034



41.3000

Body Jets

Description	Code	€ Ex VAT	€ Inc VAT
Square Body Jet 2" Exposed	78.0031	45.00	**55.35**
Round Body Jet 2" Exposed	78.0032	44.00	**54.12**
Square Body Jet 5" Concealed	78.0033	117.00	**143.91**
Round Body Jet 5" Concealed	78.0034	108.00	**132.84**

†While stocks last.

FEATURES

- Solid brass construction
- Chrome finish
- Single function
- 4mm thickness

41.3000 Pressure reducing valve is suitable for water temperature up to 80°C and inlet pressures up to 16 bar. The outlet pressure can be adjusted between 1 bar and 6 bar. Typically these valves are used on the incoming water supply.

Pressure Reducing Valve

Description	Code	€ Ex VAT	€ Inc VAT
Pressure Reducing Valve 15mm x 15mm	41.3000	104.00	**127.92**

SHOWER SEAT



*Seat weight tolerance 15 stone

Shower Seat

Description	Code	€ Ex VAT	€ Inc VAT
Shower seat 500mm x 345mm	98.0021	420.00	**516.60**

FEATURES

- Solid wood seat

Elbows & Shower Handset Holder

ELBOWS & SHOWER HANDSET HOLDERS















Elbows

Description	Colour	Code	€ Ex VAT	€ Inc VAT
Round Wall Elbow & ShowerHandset Holder	Chrome	60.1012	26.00	**31.98**
Square Wall Elbow & ShowerHandset Holder	Chrome	60.1032	27.00	**33.21**
Round Wall Elbow & ShowerHandset Holder	Matt Black	60.1018	28.00	**34.44**
Square Wall Elbow & ShowerHandset Holder	Matt Black	60.1038	28.00	**34.44**
Round Wall Elbow & ShowerHandset Holders	Brushed Brass	60.1025	28.00	**34.44**
Square Wall Elbow & ShowerHandset Holder	Brushed Brass	60.1045	30.00	**36.90**

FEATURES

- Solid brass construction

* Available February 2023

Outlet Elbows & Wall Brackets

OUTLET ELBOWS



97.0008



97.0007



93.0097



93.0096

Outlet Elbows

Description	Code	€ Ex VAT	€ Inc VAT
Square Outlet Elbow Chrome finish	97.0008	41.00	**50.43**
Round Outlet Elbow Chrome finish	97.0007	31.00	**38.13**
Square Outlet Elbow Matt Smooth Black	93.0097	54.00	**66.42**
Round Outlet Elbow Matt Smooth Black	93.0096	49.00	**60.27**

FEATURES

- Solid brass construction

OUTLET ELBOWS WITH SHOWER BRACKETS



93.0104



93.0106



93.0105

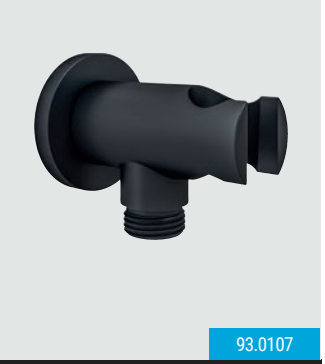

93.0107

Outlet Elbow With Shower Brackets

Description	Code	€ Ex VAT	€ Inc VAT
Square Outlet Elbow with bracket Chrome finish	93.0104	51.00	**62.73**
Round Outlet Elbow with bracket Chrome finish	93.0106	41.00	**50.43**
Square Outlet Elbow Matt Smooth Black	93.0105	55.00	**67.65**
Round Outlet Elbow Matt Smooth Black	93.0107	49.00	**60.27**

FEATURES

- Solid brass construction

HANDSET WALL BRACKETS



Luxury Wall Bracket

Code	€ Ex VAT	€ Inc VAT
93.0058	16.00	**19.68**

- Chrome plated ABS



Square Shower Holder

Code	€ Ex VAT	€ Inc VAT
78.0024	44.00	**54.12**

- Chrome plated brass body



Round Shower Holder

Code	€ Ex VAT	€ Inc VAT
78.0025	40.00	**49.20**

- Chrome plated brass body



Oval Shower Holder

Code	€ Ex VAT	€ Inc VAT
78.0026	40.00	**49.20**

- Chrome plated brass body


COLD

Taps

The following range of taps cater for all tastes, making it easy to complete your perfect room.



Contents

Side valves & bath fillers	856 - 857
Prado range	858 - 866
Contemporary and modern taps	867 - 885
Traditional taps	886 - 892
Kitchen taps	893
Wastes, levers and accessories	894 - 895

Side Valves & Bath Fillers

Side Valves - Deck Mounted Only

Description	Code	€ Ex VAT	€ Inc VAT
Valves with Braided Hose†	68.0040	174.00	**214.02**
Round Side Valve Handle**	68.0041	98.00	**120.54**
Square Side Valve Handle**	68.0042	126.00	**154.98**
Round Lever Side Valve Handle**	68.0043	96.00	**118.08**
Traditional Cross Handle Side Valve Handle**	68.0044	98.00	**120.54**
Traditional Lever Handle Side Valve Handle**	68.0045	114.00	**140.22**

** Must be fitted with 68.0040.
†To be fitted with 68.0041, 68.0042, 68.0043, 68.0044, 68.0045 only.
Ceramic disc technology.

MP



68.0041 + 68.0040 — Deck mounted only

MP



68.0044 + 68.0040 — Deck mounted only

MP



68.0045 + 68.0040 — Deck mounted only

MP



68.0043 + 68.0040 — Deck mounted only

MP

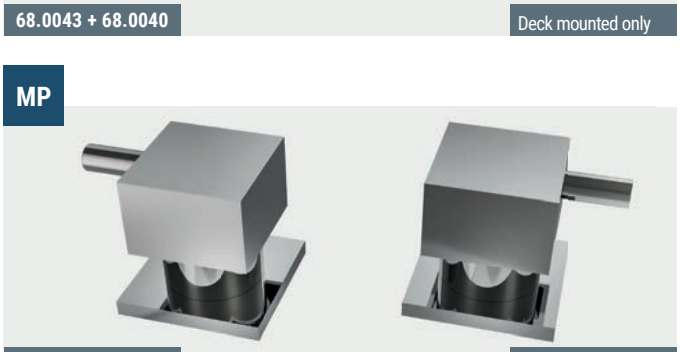

68.0042 + 68.0040 — Deck mounted only

Side Valves - Deck Or Wall Mounted

Description	Code	€ Ex VAT	€ Inc VAT
Prado Cylinder Side Valves* (Valve inc)	79.0039	153.00	**188.19**
Prado Star Side Valves* (Valve inc)	79.0049	159.00	**195.57**
Prado Lever Side Valves* (Valve inc)	79.0059	145.00	**178.35**

*Can be wall mounted or deck mounted. **Ceramic disc technology**.

Required minimum operating pressure key

MP - 0.5 bar minimum

MP



79.0039 — Deck or wall mounted

MP

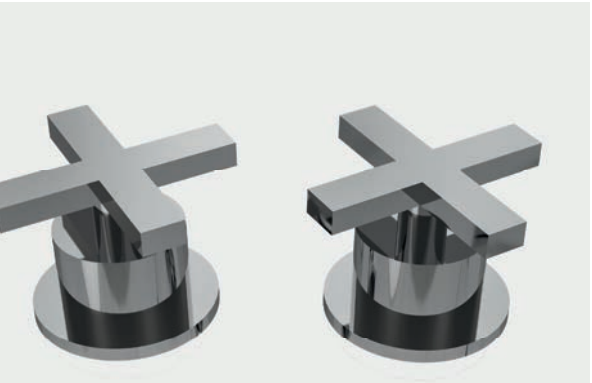

79.0049 — Deck or wall mounted

MP



79.0059 — Deck or wall mounted

Side Valves & Bath Fillers

93.0035 Requires a shower or side valve



Bath Filler

Description	Code	€ Ex VAT	€ Inc VAT
Square Waterfall Bath Filler inc waste	93.0035	161.00	**198.03**

93.0036 Requires a shower or side valve



Bath Filler

Description	Code	€ Ex VAT	€ Inc VAT
Round Waterfall Bath Filler inc waste	93.0036	145.00	**178.35**

93.0037 Wall mounted bath filler, Requires a shower or side valve

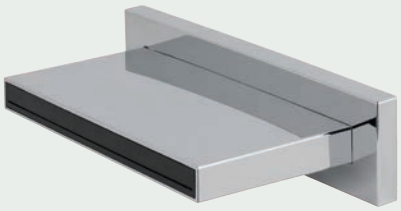

MP

Bath Filler

Description	Code	€ Ex VAT	€ Inc VAT
Waterfall Bath Filler	93.0037	152.00	**186.96**

78.0028 Wall mounted bath filler, Requires a shower or side valve



Bath Filler

Description	Code	€ Ex VAT	€ Inc VAT
Waterfall Bath Spout	78.0028	104.00	**127.92**

78.0027 Wall mounted bath filler, Requires a shower or side valve



Bath Filler

Description	Code	€ Ex VAT	€ Inc VAT
Waterfall Bath Filler	78.0027	122.00	**150.06**

2.015 Requires a shower or side valve



Bath Filler

Description	Code	€ Ex VAT	€ Inc VAT
Shallow Profile Bath Filler	2.015	384.00	**472.32**

68.0039 Requires a shower or side valve



Bath Filler

Description	Code	€ Ex VAT	€ Inc VAT
Bath Filler & Waste	68.0039	280.00	**344.40**

Prado 600 Range

PRADO 600

MP



79.0069

Prado 600						
Description	Chrome	€ Ex VAT	€ Inc VAT	Black/Chrome	€ Ex VAT	€ Inc VAT
Prado 600 Basin Mono (inc Waste)	79.0066	161.00	**198.03**	79.0074†	180.00	**221.40**
Prado 600 High Flow 1TH Bath Filler	79.0068	205.00	**252.15**	79.0076†	215.00	**264.45**
Prado 600 Extended Mono Basin	79.0069	219.00	**269.37**	79.0077†	219.00	**269.37**
Prado 600 BSM (inc Kit)	79.0070	335.00	**412.05**	79.0078†	336.00	**413.28**
Prado 600 Bath Filler	79.0071	278.00	**341.94**	79.0079†	301.00	**370.23**
Prado 600 1/4 Turn Basin Taps	79.0072	188.00	**231.24**	79.0080†	198.00	**243.54**
Prado 600 1/4 Turn Bath Taps	79.0073	191.00	**234.93**	79.0081†	199.00	**244.77**

†While stocks last.

MP

Required minimum operating pressure key

- 0.5 bar minimum

LP1 - 0.1 bar minimum

MP

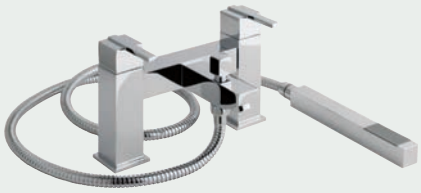

79.0070

MP



79.0066

LP1



79.0068

MP



79.0071

MP



79.0072

LP1



79.0073

Prado Star Range

PRADO STAR



Prado Star			
Description	Code	€ Ex VAT	€ Inc VAT
Prado Star Basin Mono Swivel Spout (inc Waste)	79.0040	175.00	**215.25**
Prado Star Bath Filler	79.0042	255.00	**313.65**
Prado Star BSM (inc Kit)**	79.0043	318.00	**391.14**
Prado Star 4 Hole Deck BSM	79.0044	322.00	**396.06**
Prado Star 3 Hole Deck Basin Mixer	79.0045	243.00	**298.89**
Prado Star 3 Hole Bath Filler	79.0046	243.00	**298.89**
Prado Star 3 Hole Wall Mounted Basin Mixer	79.0047	166.00	**204.18**
Prado Star 3 Hole Wall Mounted Bath Filler	79.0048	168.00	**206.64**
Prado Star Side Valves*	79.0049	159.00	**195.57**

*Can be wall mounted or deck mounted. Ceramic disc technology.
**Wall brackets and slide rail kit sold separately.

Required minimum operating pressure key

MP - 0.5 bar minimum

For Overflow Fillers see page 845

MP



79.0040

MP



79.0042

MP



79.0044

MP



79.0045

MP



79.0046

MP



79.0047

MP



79.0048

MP



79.0049

Wall or deck mounted

Prado Cylinder Range

PRADO CYLINDER



Prado Cylinder			
Description	**Code**	**€ Ex VAT**	**€ Inc VAT**
Prado Cylinder Basin Mono (inc Waste)	79.0050	175.00	**215.25**
Prado Cylinder Bath Filler	79.0052	255.00	**313.65**
Prado Cylinder BSM (inc Kit)**	79.0053	318.00	**391.14**
Prado Cylinder 4 Hole Deck BSM	79.0054	322.00	**396.06**
Prado Cylinder 3 Hole Deck Basin Mixer	79.0055	243.00	**298.89**
Prado Cylinder 3 Hole Bath Filler	79.0056	243.00	**298.89**
Prado Cylinder 3 Hole Wall Mounted Basin Mixer	79.0057	166.00	**204.18**
Prado Cylinder 3 Hole Wall Mounted Bath Filler	79.0058	168.00	**206.64**
Prado Cylinder Side Valves*	79.0039	153.00	**188.19**

*Can be wall mounted or deck mounted. Ceramic disc technology.
**Wall brackets and slide rail kit sold separately.

Required minimum operating pressure key

MP - 0.5 bar minimum

For Overflow Fillers see page 857

















Prado Lever Range

PRADO LEVER



Prado Lever			
Description	**Code**	**€ Ex VAT**	**€ Inc VAT**
Prado Lever Basin Mono Swivel Spout (inc Waste)	79.0030	175.00	**215.25**
Prado Lever Bath Filler	79.0032	259.00	**318.57**
Prado Lever BSM (inc Kit)**	79.0033	320.00	**393.60**
Prado Lever 4 Hole Deck BSM	79.0034	329.00	**404.67**
Prado Lever 3 Hole Deck Basin MIxer	79.0035	265.00	**325.95**
Prado Lever 3 Hole Bath Filler	79.0036	265.00	**325.95**
Prado Lever 3 Hole Wall Mounted Basin Mixer	79.0037	175.00	**215.25**
Prado Lever 3 Hole Wall Mounted Bath Filler	79.0038	177.00	**217.71**
Prado Lever Side Valves*	79.0059	145.00	**178.35**

*Can be wall mounted or deck mounted. Ceramic disc technology.
**Wall brackets and slide rail kit sold separately.

Required minimum operating pressure key

MP - 0.5 bar minimum

For Overflow Fillers see page 857

















Prado 500 Range

PRADO 500

LP1



79.0062

Bath filler delivers over 50 litres a minute at 3 bar supply

Prado 500			
Description	**Code**	**€ Ex VAT**	**€ Inc VAT**
Prado 500 Basin Mono (inc Waste)	79.0060	128.00	**157.44**
Prado 500 1TH Bath Filler	79.0062	191.00	**234.93**
Prado 500 Extended Mono Basin	79.0063	159.00	**195.57**
Prado 500 BSM (inc Kit)	79.0064	276.00	**339.48**
Prado 500 Bath Filler*	79.0065	226.00	**277.98**

*Wall brackets and slide rail kit sold separately. Ceramic disc technology.

Pressure (bar) for **79.0062**	Flow (litres/min) for **79.0062**
0.1	9
0.5	18
1	29
2	43
3	51

Note: Pressure based on an open ended valve outlet without downstream resistance. Applies to bath filler only.

Required minimum operating pressure key

LP1 - 0.1 bar minimum **MP** - 0.5 bar minimum

MP



79.0060

MP



79.0063

MP



79.0064

MP WRAS



79.0065

Prado 650 & 580 Range

PRADO 650


56.2005

Prado 650

Description	Code	€ Ex VAT	€ Inc VAT
Prado 650 mono basin c/w click waste	56.2005	185.00	**227.55**
Prado 650 mono bidet c/w click waste	56.2006	185.00	**227.55**
Prado 650 high rise mono basin	56.2007	237.00	**291.51**
Prado 650 bath filler	56.2008	318.00	**391.14**
Prado 650 BSM inc kit*	56.2009	336.00	**413.28**
Minimalist square /Type 10 Shower Handset	98.0016	21.00	**25.83**

*Wall brackets sold separately. Ceramic disc technology.

Pressure (bar)	Flow (litres/min)	
	Bath Filler (56.2008)	BSM (56.2009)
0.1	4.8	4.6
0.5	10.1	9
1	15.6	14
2	22.5	20.4
3	28	25.4

Note: Pressure based on an open ended valve outlet without downstream resistance. Applies to bath filler only.

Required minimum operating pressure key

MP - 0.5 bar minimum

MP


56.2005

MP


56.2006

MP


56.2007

MP


56.2008

MP


56.2009

MP


98.0016

PRADO 580


56.2027

Prado 580

Description	Code	€ Ex VAT	€ Inc VAT
Prado 580 Mono Hi Flow Bath Filler Chrome	56.2027	329.00	**404.67**

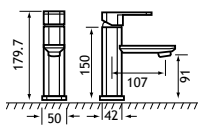

56.2005

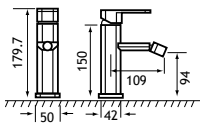

56.2006

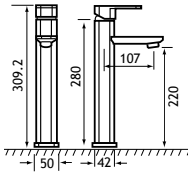

56.2007

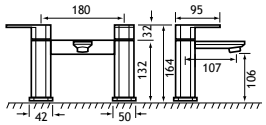

56.2008

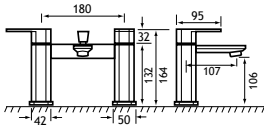

56.2009

Prado 700 Range

PRADO 700


56.2010

Prado 700			
Description	**Code**	**€ Ex VAT**	**€ Inc VAT**
Prado 700 mono basin c/w click waste	56.2010	184.00	**226.32**
Prado 700 mono bidet c/w click waste	56.2011	184.00	**226.32**
Prado 700 high rise mono basin	56.2012	240.00	**295.20**
Prado 700 bath filler	56.2013	286.00	**351.78**
Prado 700 BSM inc kit*	56.2014	303.00	**372.69**
Minimalist square /Type 10 Shower Handset	98.0016	21.00	**25.83**

*Wall brackets sold separately. Ceramic disc technology.

Required minimum operating pressure key

MP - 0.5 bar minimum

Pressure (bar)	Flow (litres/min)	
	Bath Filler (56.2013)	BSM (56.2014)
0.1	4.8	4.6
0.5	10.1	9
1	15.6	14
2	22.5	20.4

MP


56.2010

MP


56.2011

MP


56.2012

MP


56.2013

MP


56.2014

MP


98.0016

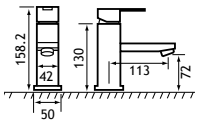

56.2010

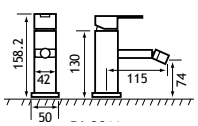

56.2011

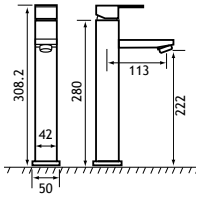

56.2012

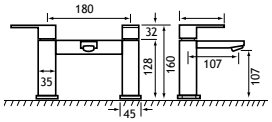

56.2013

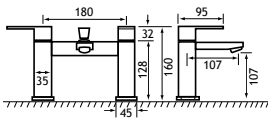

56.2014

Prado 550 Range

PRADO 550



Prado 550

Description	Code	€ Ex VAT	€ Inc VAT
Prado 550 mono basin c/w clicker waste	56.2000	163.00	**200.49**
Prado 550 mono bidet c/w clicker waste	56.2001	163.00	**200.49**
Prado 550 high rise mono basin	56.2002	184.00	**226.32**
Prado 550 bath filler	56.2003	237.00	**291.51**
Prado 550 BSM inc kit*	56.2004	247.00	**303.81**

*Wall brackets sold separately. Ceramic disc technology.

Required minimum operating pressure key

MP - 0.5 bar minimum

Pressure (bar)	Flow (litres/min)	
	Bath Filler (56.2003)	BSM (56.2004)
0.1	4.8	4.6
0.5	10.1	9
1	15.6	14
2	22.5	20.4











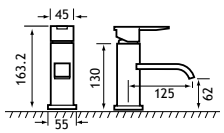

56.2000

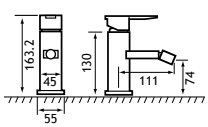

56.2001

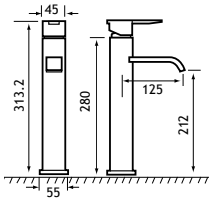

56.2002

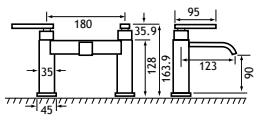

56.2003

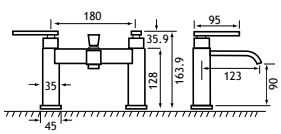

56.2004

Prado 800

PRADO 800



Prado 800			
Description	**Code**	**€ Ex VAT**	**€ Inc VAT**
Prado 800 mono basin c/w click waste	56.2015	160.00	**196.80**
Prado 800 mono bidet c/w click waste	56.2016	160.00	**196.80**
Prado 800 high rise mono basin	56.2017	184.00	**226.32**
Prado 800 bath filler	56.2018	240.00	**295.20**
Prado 800 BSM inc kit*	56.2019	255.00	**313.65**

*Wall brackets sold separately. Ceramic disc technology.

Required minimum operating pressure key

LP1	- 0.1 bar minimum	**MP**	- 0.5 bar minimum
LP2	- 0.2 bar minimum	**HP1**	- 1 bar minimum

MP



BSM KIT



MP



MP



MP



MP



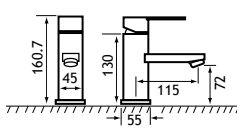

56.2015

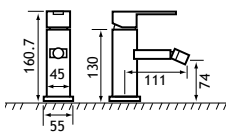

56.2016

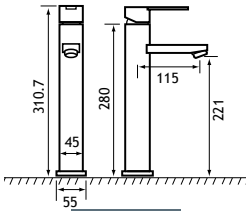

56.2017

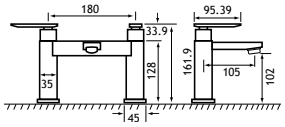

56.2018

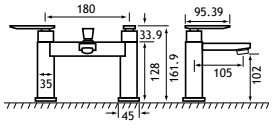

56.2019

Prado 300 & Camborne Range

CAMBORNE

Camborne Basin Mono			
Description	**Code**	**€ Ex VAT**	**€ Inc VAT**
Camborne Basin Mono (inc waste)	93.0004	206.00	**253.38**
Camborne Bath Filler	93.0005	307.00	**377.61**
Camborne BSM inc kit	93.0006	349.00	**429.27**

Pressure (bar)	Flow (litres/min)	
	Bath Filler (93.0005)	BSM (93.0006)
0.1	11.2	9.3
0.5	22.9	19.5
1	32.1	27.5
2	45.3	39.2
3	55.4	48.2

Note: Pressure based on an open ended valve outlet without downstream resistance.



93.0004

MP



93.0004

MP



93.0005 Waterfall Tap

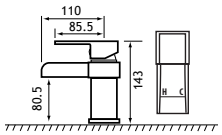

93.0004

Ceramic disc technology on all products within range.

MP - 0.5 bar minimum

MP



93.0006 Waterfall Tap

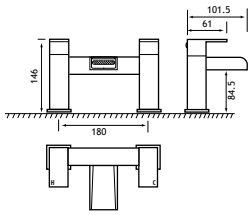

93.0005

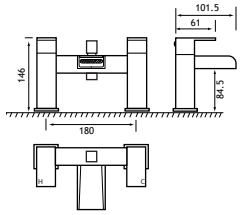

93.0006

Falmouth Range

FALMOUTH

Falmouth Basin Mono

Description	Code	€ Ex VAT	€ Inc VAT
Falmouth Basin Mono (inc waste)	93.0001	212.00	**260.76**

HP1



93.0001

Falmouth Bath Filler

Description	Code	€ Ex VAT	€ Inc VAT
Falmouth wall mounted Bath Filler	93.0002	306.00	**376.38**

HP1



93.0002

Falmouth Wall Mounted BSM Kit

Description	Code	€ Ex VAT	€ Inc VAT
Falmouth wall mounted BSM inc kit	93.0003	342.00	**420.66**

HP1



93.0003



93.0001

Pressure (bar)	Flow (litres/min)	
	Bath Filler (93.0002)	BSM (93.0003)
1	7.8	7.9
2	11	11.3
3	13.2	13.8

Note: Pressure based on an open ended valve outlet without downstream resistance.

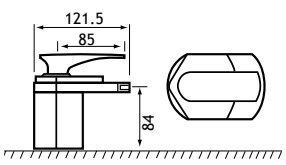

93.0001

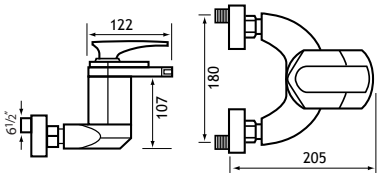

93.0002

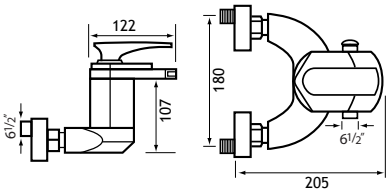

93.0003

Biava Mini Range

BIAVA MINI

HP1



56.2052

Very small mono basin tap ideal for small cloakrooms.

Biava Mini

Description	Code	€ Ex VAT	€ Inc VAT
Biava Mini basin mono c/w clicker waste†	56.2052	161.00	**198.03**

†While stocks last.

Note: Minimum recommended pressure 1.0. Ceramic disc technology.

HP1



56.2052

Required minimum operating pressure key

MP	- 0.5 bar minimum
HP1	- 1 bar minimum

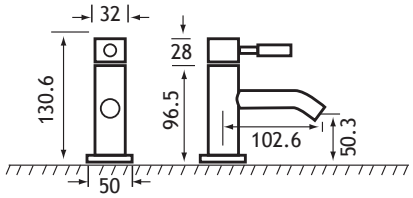

56.2052

Helston Range

HELSTON

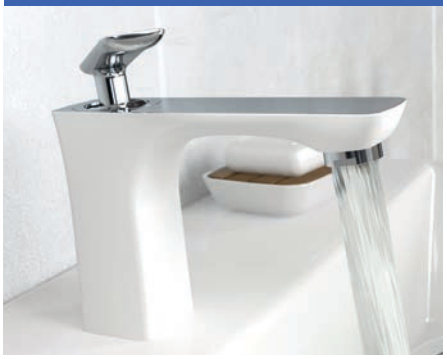



Pressure (bar)	(litres/min)	(litres/min)	(litres/min)
	Basin Mono	Bath Filler	BSM
0.5	6.4	8	7.7
1	8.8	11	10.7
2	12.1	15.3	14.9
3	14.8	18.7	18.1

Note: Pressure based on an open ended valve outlet without downstream resistance.

Ceramic disc technology on all products within range.

The Helston Tap range brings a modern and premium design to any bathroom. Available in three function styles, six colours options and three quality finishes, this collection has been tailored to coordinate your style choices.

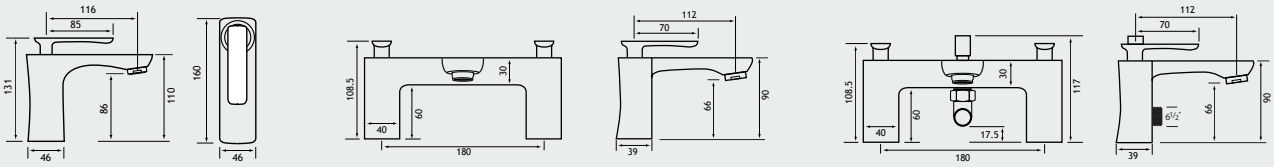

MP



Helston Basin Mono (White)

Description	Code	€ Ex VAT	€ Inc VAT
Helston Basin Mono Gloss White (inc waste)	93.0013	177.00	**217.71**
Helston Basin Mono Matt Smooth White (inc waste)	93.0072	177.00	**217.71**
Helston Basin Mono Matt Textured White (inc waste)	93.0073	177.00	**217.71**

MP



Helston Basin Mono (Anthracite)

Description	Code	€ Ex VAT	€ Inc VAT
Helston Basin Mono Matt Smooth Anthracite (inc waste)	93.0016	177.00	**217.71**
Helston Basin Mono Gloss Anthracite (inc waste)	93.0074	177.00	**217.71**
Helston Basin Mono Matt Textured Anthracite (inc waste)	93.0075	177.00	**217.71**

MP



Matt Smooth 93.0084

Helston Basin Mono (Cappuccino)

Description	Code	€ Ex VAT	€ Inc VAT
Helston Basin Mono Gloss Cappuccino (inc waste)	93.0083	192.00	**236.16**
Helston Basin Mono Matt Smooth Cappuccino (inc waste)	93.0084	192.00	**236.16**
Helston Basin Mono Matt Textured Cappuccino (inc waste)	93.0085	192.00	**236.16**

MP



Matt Smooth 93.0081

Helston Basin Mono (Grey)

Description	Code	€ Ex VAT	€ Inc VAT
Helston Basin Mono Gloss Grey (inc waste)	93.0080	177.00	**217.71**
Helston Basin Mono Matt Smooth Grey (inc waste)	93.0081	177.00	**217.71**
Helston Basin Mono Matt Textured Grey (inc waste)	93.0082	177.00	**217.71**

MP



Helston Basin Mono (Black)

Description	Code	€ Ex VAT	€ Inc VAT
Helston Basin Mono Matt Smooth Black (inc waste)	93.0019	177.00	**217.71**
Helston Basin Mono Matt Textured Black (inc waste)	93.0076	177.00	**217.71**
Helston Basin Mono Gloss Black (inc waste)	93.0079	177.00	**217.71**

MP



Helston Basin Mono (Chrome)

Description	Code	€ Ex VAT	€ Inc VAT
Helston Basin Mono Chrome (inc waste)	93.0010	161.00	**198.03**

Helston Range

MP



Helston Bath Filler (White)

Description	Code	€ Ex VAT	€ Inc VAT
Helston Bath Filler Gloss White	93.0014	278.00	**341.94**

MP



Helston Bath Filler (Chrome)

Description	Code	€ Ex VAT	€ Inc VAT
Helston Bath Filler Chrome	93.0011	247.00	**303.81**

MP



Helston Bath Filler (Anthracite)

Description	Code	€ Ex VAT	€ Inc VAT
Helston Bath Filler Matt Smooth Anthracite	93.0017	278.00	**341.94**

MP



Helston Bath Filler (Black)

Description	Code	€ Ex VAT	€ Inc VAT
Helston Bath Filler Matt Smooth Black	93.0020	278.00	**341.94**
Helston Bath Filler Matt Textured Black	93.0077	278.00	**341.94**

MP

Shower Kit parts in Chrome only



Helston BSM Inc Kit (White)

Description	Code	€ Ex VAT	€ Inc VAT
Helston BSM inc kit Gloss White	93.0015	348.00	**428.04**

MP



Helston BSM Inc Kit (Chrome)

Description	Code	€ Ex VAT	€ Inc VAT
Helston BSM inc kit Chrome	93.0012	306.00	**376.38**

MP

Shower Kit parts in Chrome only



Helston BSM Inc Kit (Anthracite)

Description	Code	€ Ex VAT	€ Inc VAT
Helston BSM inc kit Matt Smooth Anthracite	93.0018	348.00	**428.04**
Helston BSM inc kit Gloss Anthracite	93.0109	348.00	**428.04**

MP

Shower Kit parts in Chrome only



Helston BSM Inc Kit (Black)

Description	Code	€ Ex VAT	€ Inc VAT
Helston BSM inc kit Matt Smooth Black	93.0021	348.00	**428.04**
Helston BSM inc kit Matt Textured Black	93.0078	348.00	**428.04**
Helston BSM inc kit Gloss Black	93.0108	348.00	**428.04**

MP

Shower Kit parts in Chrome only



Gloss 93.0111

Helston BSM Inc Kit (Cappuccino)

Description	Code	€ Ex VAT	€ Inc VAT
Helston BSM (inc kit) Gloss Cappuccino	93.0111	348.00	**428.04**

MP

Shower Kit parts in Chrome only



Gloss 93.0110

Helston BSM Inc Kit (Grey)

Description	Code	€ Ex VAT	€ Inc VAT
Helston BSM (inc kit) Gloss Grey	93.0110	348.00	**428.04**

Choose your Helston tap finish!
Match your Helston Basin Mono Tap to your other bathroom products by choosing you preferred colour in one of three finishes:

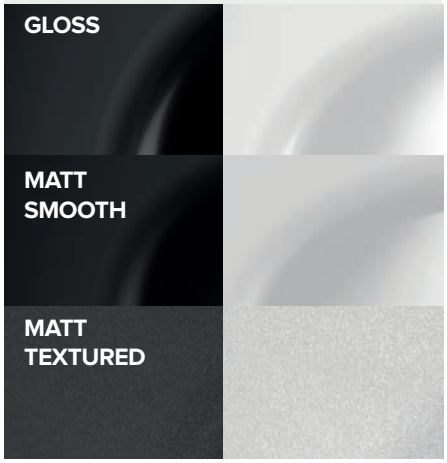

Tec & Hayle Range

TEC

Tec Single Lever

Description	Code	€ Ex VAT	€ Inc VAT
Floor Standing Manual Mono BSM	93.0112	569.00	**699.87**
Floor Standing Thermostatic Mono BSM	93.0113	675.00	**830.25**
Wall Mounted Basin/Bath Filler	93.0041	181.00	**222.63**

Ceramic disc technology.

Pressure (bar)	Flow (litres/min)			
	93.0022	93.0041	93.0112	93.0113
1	7.3	7.2	9.3	9.1
2	10.2	9.9	13.0	13.4
3	12.3	12.2	15.9	16.8

HP1



93.0041

HP1



93.0112

HP1



93.0113

HAYLE

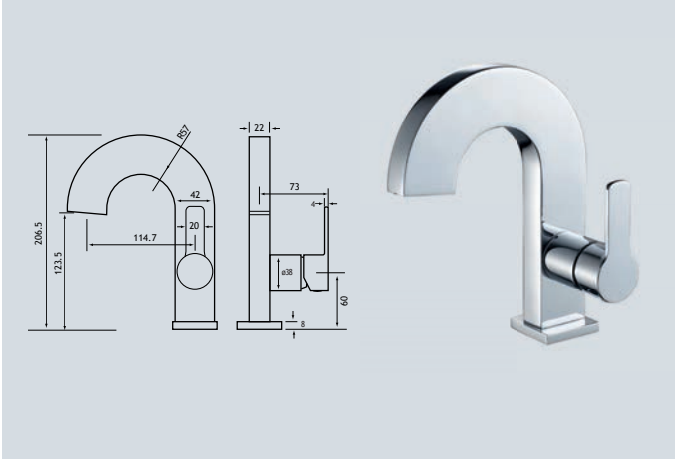

Hayle

Description	Code	€ Ex VAT	€ Inc VAT
Hayle Basin Mono (inc waste)	93.0022	192.00	**236.16**

Ceramic disc technology.

HP1



93.0022

Isbourne Range

ISBOURNE


93.0055


93.0057 (inc kit)

Isbourne

Description	Code	€ Ex VAT	€ Inc VAT
Isbourne Basin Mono (inc waste)	93.0055	91.00	**111.93**
Isbourne BSM inc kit	93.0057	153.00	**188.19**
Ceramic Disc Technology.			

FEATURES
- Made from brass
- Ceramic disk technology

Required minimum operating pressure key

MP - 0.5 bar minimum **HP1** - 1 bar minimum

MP


93.0055

MP

For Shower Kits see page 834-836


93.0057

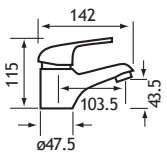

93.0055

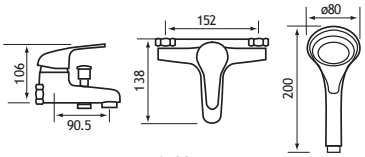

93.0057

Walton Range

WALTON

MP



Walton			
Description	**Code**	**€ Ex VAT**	**€ Inc VAT**
Walton Basin Mono†	56.2053	282.00	**346.86**
Walton Bath Filler†	56.2054	441.00	**542.43**
Walton BSM inc kit†	56.2055	499.00	**613.77**
Minimalist square /Type 10 Shower Handset*	98.0016	21.00	**25.83**

Ceramic disc technology. *98.0016 square hand set as optional extra.
**Wall brackets sold separately. †While stocks last.

Required minimum operating pressure key

MP - 0.5 bar minimum

MP



56.2053

MP



56.2054

MP



56.2055

MP



98.0016

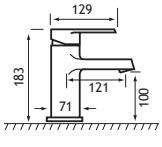

56.2053

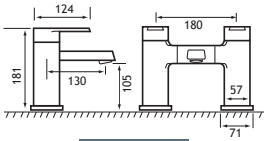

56.2054

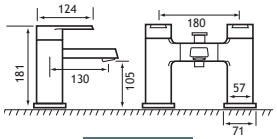

56.2055

Winchcombe Range

WINCHCOMBE

MP



56.2056

Winchcombe			
Description	**Code**	**€ Ex VAT**	**€ Inc VAT**
Winchcombe Basin Mono†	56.2056	269.00	**330.87**
Winchcombe Bath Filler†	56.2057	363.00	**446.49**
Winchcombe BSM inc kit*†	56.2058	419.00	**515.37**

Ceramic disc technology. *Wall brackets and slide rail kit sold separately.
†While stocks last.

BSM KIT



MP



56.2057

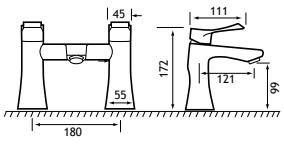

56.2057

MP



56.2058

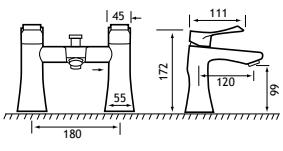

56.2058

Westbourne Range

WESTBOURNE

MP



Westbourne			
Description	**Code**	**€ Ex VAT**	**€ Inc VAT**
Westbourne Basin Mono†	56.2059	243.00	**298.89**
Westbourne BSM inc kit*†	56.2061	395.00	**485.85**

*Wall brackets sold separately. Ceramic disc technology. †While stocks last.

MP



MP



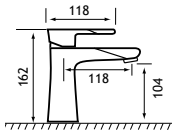

56.2059

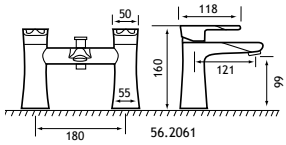

56.2061

Wingrave Range

WINGRAVE

MP



56.2062

Wingrave			
Description	**Code**	**€ Ex VAT**	**€ Inc VAT**
Wingrave Basin Mono†	56.2062	266.00	**327.18**
Wingrave Bath Filler†	56.2063	380.00	**467.40**
Wingrave BSM inc kit*†	56.2064	436.00	**536.28**
Minimalist square /Type 10 Shower Handset**	98.0016	21.00	**25.83**

*Wall brackets sold separately. **98.0016 handset as optional extra. Ceramic disc technology. †While stocks last.

MP



56.2062

MP



56.2063

MP



56.2064



98.0016

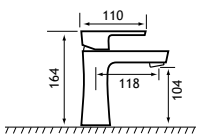

56.2062

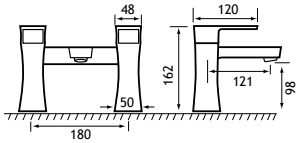

56.2063

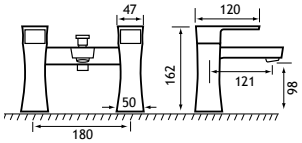

56.2064

Firth & Cortauld Range

FIRTH

Firth

Description	Code	€ Ex VAT	€ Inc VAT
Firth BSM inc kit†	56.2050	355.00	**436.65**
Minimalist square /Type 10 Shower Handset**	98.0016	21.00	**25.83**

*Wall brackets sold separately. Ceramic disc technology.
** 98.0016 handset as optional extra. †While stocks last.

MP - 0.5 bar minimum

MP



56.2050



98.0016

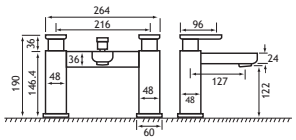

56.2050

CORTAULD

MP



56.2040

Cortauld

Description	Code	€ Ex VAT	€ Inc VAT
Cortauld mono basin c/w clicker waste	56.2040	234.00	**287.82**
Cortauld mono bidet c/w clicker waste	56.2041	234.00	**287.82**
Cortauld high rise mono basin c/w clicker waste	56.2042	276.00	**339.48**
Cortauld bath filler	56.2043	350.00	**430.50**
Cortauld BSM inc kit*	56.2044	367.00	**451.41**

*Wall brackets sold separately. Ceramic disc technology.

MP



56.2043

MP



56.2044

MP



56.2041

MP



56.2042

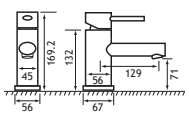

56.2040

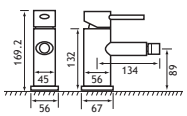

56.4041

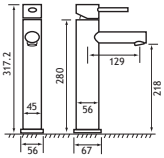

56.2042

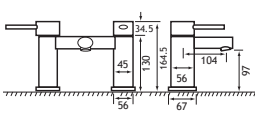

56.2043

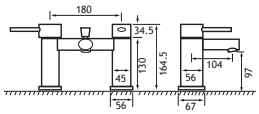

56.2044

Estorick & Albermarle Range

ESTORICK

Estorick

Description	Code	€ Ex VAT	€ Inc VAT
Estorick mono basin c/w clicker waste	56.2035	245.00	**301.35**
Estorick mono bidet c/w clicker waste	56.2036	245.00	**301.35**
Estorick high rise mono basin c/w clicker waste	56.2037	287.00	**353.01**
Estorick bath filler	56.2038	317.00	**389.91**
Estorick BSM inc kit*	56.2039	332.00	**408.36**

*Wall brackets sold separately. Ceramic disc technology.

With the high angle of discharge of this spout, customers with a high pressure supply may have to fit pressure reducing valves or partially close the isolating valves to ensure the discharge stays within smaller basins.

Pressure (bar)	Flow (litres/min)	
	Bath Filler (56.2038)	BSM (56.2039)
0.1	4.8	4.6
0.5	10.1	9
1	15.6	14
2	22.5	20.4

Required minimum operating pressure key

MP - 0.5 bar minimum



56.2035 — Swivel spout

MP



56.2035

MP



56.2036

MP



56.2039

BSM KIT



MP



56.2037

MP



56.2038

ALBERMARLE



Albermarle

Description	Code	€ Ex VAT	€ Inc VAT
Albermarle bath filler	56.2051	401.00	**493.23**

Ceramic disc technology.

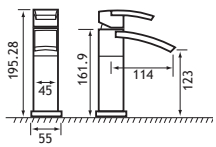

56.2035

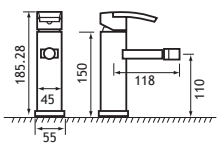

56.2036

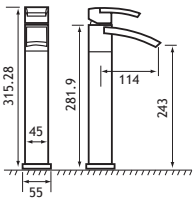

56.2037

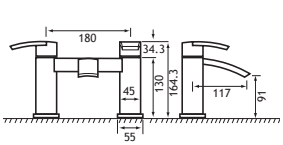

56.2038

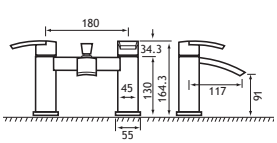

56.2039

Winchester Range & Vivande Range

WINCHESTER

MP



56.2066

Winchester

Description	Code	€ Ex VAT	€ Inc VAT
Winchester Bath Filler†	56.2066	366.00	**450.18**
Winchester BSM inc kit*†	56.2067	419.00	**515.37**

*Wall brackets sold separately. Ceramic disc technology. †While stocks last.

MP



56.2067

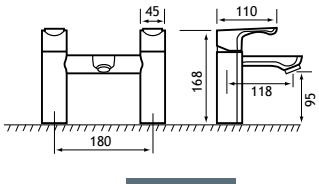

56.2066

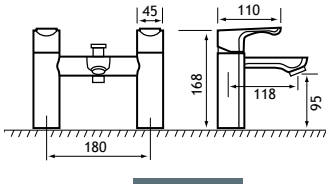

56.2067

VIVANDE

MP



56.2033

Vivande

Description	Code	€ Ex VAT	€ Inc VAT
Vivande bath filler†	56.2033	307.00	**377.61**
Vivande BSM inc kit*†	56.2034	352.00	**432.96**

*Wall brackets sold separately. Ceramic disc technology. While Stocks Last†

MP



56.2034

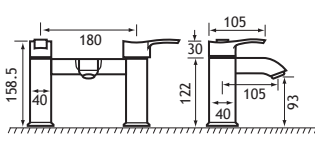

56.2033

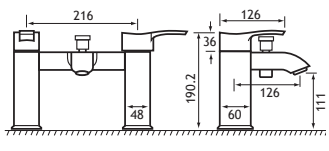

56.2034

Diorama Range

DIORAMA

MP



56.2028

Diorama			
Description	Code	€ Ex VAT	€ Inc VAT
Diorama mono basin c/w clicker waste†	56.2028	223.00	**274.29**
Diorama bath filler†	56.2030	318.00	**391.14**
Diorama BSM inc kit*†	56.2031	366.00	**450.18**
Minimalist square /Type 10 Shower Handset**	98.0016	21.00	**25.83**

*Wall brackets sold separately. Ceramic disc technology.
** 98.0016 handset as optional extra. While Stocks Last†

MP



56.2030

MP



56.2031

BSM KIT



MP



98.0016

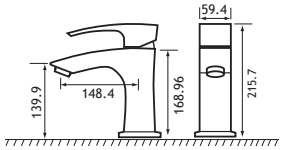

56.2028

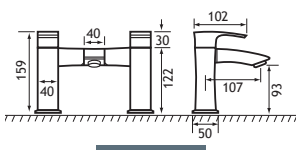

56.2030

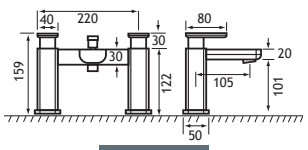

56.2031

Hooper Range

HOOPER

MP



Hooper			
Description	**Code**	**€ Ex VAT**	**€ Inc VAT**
Hooper mono basin c/w clicker waste†	56.2045	194.00	**238.62**
Hooper bath filler†	56.2046	307.00	**377.61**
Hooper BSM inc kit*†	56.2047	352.00	**432.96**

*Wall brackets sold separately. Ceramic disc technology. While Stocks Last†

MP



56.2045

MP



56.2046

MP



56.2047

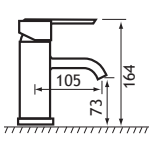

56.2045

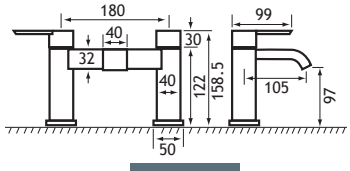

56.2046

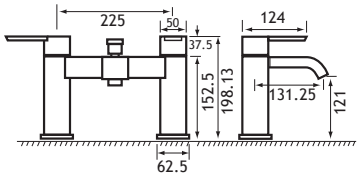

56.2047

Prestwood Range

PRESTWOOD

MP



56.2078

Prestwood			
Description	**Code**	**€ Ex VAT**	**€ Inc VAT**
Prestwood Mono Basin	56.2078	170.00	**209.10**
Prestwood Bath Filler	56.2079	301.00	**370.23**
Prestwood BSM inc kit*	56.2080	370.00	**455.10**

*Wall brackets sold separately. Ceramic disc technology.

BSM KIT



MP



56.2078

MP



56.2079

MP



56.2080

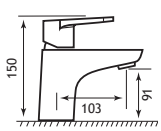

56.2078

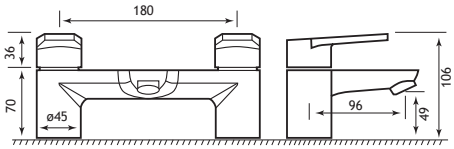

56.2079

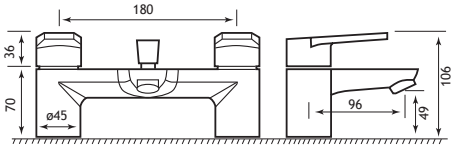

56.2080

Biava Hi Flow & Linslade Range

BIAVA HI.FLOW

Biava Hi.flow

Description	Code	€ Ex VAT	€ Inc VAT
Biava Hi.Flow Basin Mono (inc waste)	93.0052	146.00	**179.58**
Biava Hi.Flow Bath Filler	93.0053	170.00	**209.10**
Biava Hi.Flow Bath Filler inc Diverter	93.0054	191.00	**234.93**

Ceramic disc technology.

Pressure (bar)	(litres/min) Basin Mono (93.0052)	(litres/min) Bath Filler (93.0053)	(litres/min) BSM (93.0054)
0.1	6.8	9.5	9.3
0.5	13.6	22.1	21.6
1	18.8	32.1	30.8
2	26.4	43.6	43.2
3	32.1	53.4	53.3

Note: Pressure based on an open ended valve outlet without downstream resistance.

Required minimum operating pressure key

LP1 - 0.1 bar minimum **MP** - 0.5 bar minimum



LP1



93.0052

LP1



93.0053

Bath filler delivers over 50 litres a minute at 3 bar supply

LP1



93.0054

For Shower Kits see page 834-836

LINSLADE

Linslade

Description	Code	€ Ex VAT	€ Inc VAT
Linslade Mono Basin†	56.2070	170.00	**209.10**
Linslade Bath Filler†	56.2082	234.00	**287.82**
Linslade BSM inc kit*†	56.2083	296.00	**364.08**

*Wall brackets sold separately. Ceramic disc technology. While Stocks Last†

BSM KIT



MP



56.2070

MP



56.2083

MP



56.2082

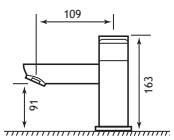

56.2070

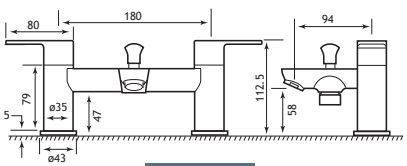

56.2083

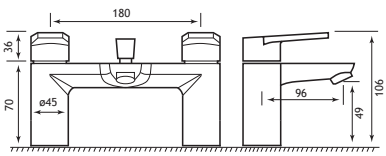

56.2082

Newlyn Range & Thermostatic BSM



Ceramic disc technology on all products within range.

NEWLYN

Pressure (bar)	Flow (litres/min)	
	Bath Filler (93.0008)	BSM (93.0009)
0.5	7.1	7.0
1	9.9	9.7
2	13.7	13.5
3	16.7	16.5

Note: Pressure based on an open ended valve outlet without downstream resistance.

The Newlyn range is a traditional collection that brings an elegant touch to any bathroom.

Newlyn Basin Mono

Description	Code	€ Ex VAT	€ Inc VAT
Newlyn Basin Mono (inc waste)	93.0007	212.00	**260.76**

MP



Newlyn Bath Filler

Description	Code	€ Ex VAT	€ Inc VAT
Newlyn Bath Filler	93.0008	300.00	**369.00**

MP



Newlyn BSM Inc Kit

Description	Code	€ Ex VAT	€ Inc VAT
Newlyn BSM inc kit	93.0009	342.00	**420.66**

MP



THERMOSTATIC BATH SHOWER MIXERS

MP



93.0038

For Shower Kits see page 834-836

New Biava Wall Mounted Thermostatic BSM w/o Kit Chrome

Code	€ Ex VAT	€ Inc VAT
93.0038	223.00	**274.29**

Pressure	LP1 (1 bar minimum)
• Fixing centres	150mm
• Chrome plated brass body	
• Thermostatic control	
• Ceramic disc cartridge technology	
• Anti-scald function	
• Built in diverter	

Shower hose not included.

93.0038 Pressure (bar)	Flow (litres/min)
1	12
2	18.5
3	22.5

Note: At maintained equal inlet pressures with open outlet at mid blend temperature.

MP



93.0039

For Shower Kits see page 834-836

Cotswold Wall Mounted Thermostatic BSM w/o kit

Code	€ Ex VAT	€ Inc VAT
93.0039	188.00	**231.24**

Pressure	LP1 (1 bar minimum)
• Fixing centres	150mm
• Chrome plated brass body	
• Thermostatic control	
• Ceramic disc cartridge technology	
• Anti-scald function	
• Built in diverter	

93.0039 Pressure (bar)	Flow (litres/min)
1	13.5
2	19.8
3	23.2

Note: At maintained equal inlet pressures with open outlet at mid blend temperature.



Pictured 93.0038 with 93.0040



93.0040

Deck Mounting Pillars Chrome

Code	€ Ex VAT	€ Inc VAT
93.0040	54.00	**66.42**

When fitted with 93.0038 / 93.0039, please change centre fixings from 150mm to 180mm

Leith Range

LEITH BASIN TAPS & MIXERS



Leith			
Description	**Code**	**€ Ex VAT**	**€ Inc VAT**
Leith Bidet Mono inc push button waste	79.0018	146.00	**179.58**
Leith Basin Mono inc push button waste	79.0020	149.00	**183.27**
Leith Wall Mounted Basin Mixer	79.0022	152.00	**186.96**

Ceramic disc technology.









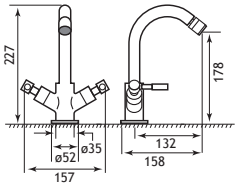

79.0018

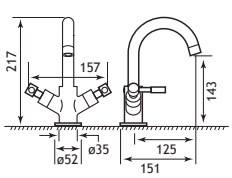

79.0020

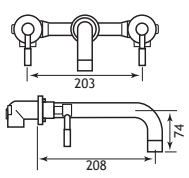

79.0022

Pressure (bar)	Flow (litres/min)
0.1	9
0.5	18
1	29
2	43
3	51

Note: Pressure based on an open ended valve outlet without downstream resistance. Applies to bath filler only.

Leith Range

LEITH BATH TAPS & FILLERS

Leith			
Description	**Code**	**€ Ex VAT**	**€ Inc VAT**
Leith Floor Mounted BSM inc kit	79.0015	646.00	**794.58**
Leith BSM inc kit	79.0016	252.00	**309.96**
Leith Basin Taps	79.0017	124.00	**152.52**
Leith Bath Filler	79.0019	209.00	**257.07**
Leith Bath Taps	79.0021	157.00	**193.11**
Leith Wall Mounted Bath Filler	79.0023	153.00	**188.19**

Ceramic disc technology.

MP



79.0023

MP



79.0023

MP



79.0015

MP



79.0015

MP



79.0016

MP



79.0019

MP



79.0021

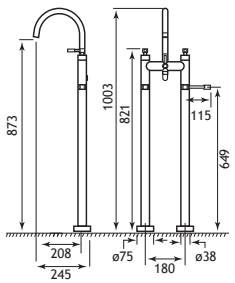

79.0015

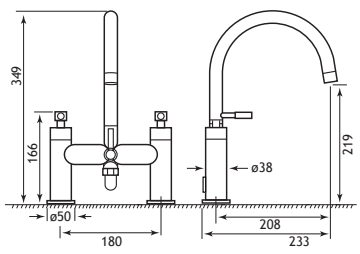

79.0016

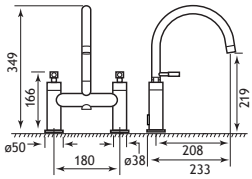

79.0019

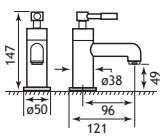

79.0021

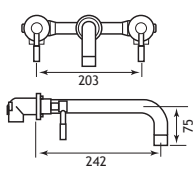

79.0023

Abberton Range

ABBERTON RANGE





Abberton Basin Taps - Chrome

Description	Code	€ Ex VAT	€ Inc VAT
Abberton Mini Basin Mono with Waste	79.1031	105.00	**129.15**
Abberton Basin Mono with Waste	79.1034	117.00	**143.91**

* Available February 2023

Abberton Basin Taps - Black

Description	Code	€ Ex VAT	€ Inc VAT
Abberton Mini Basin Mono with Waste	79.1032	112.00	**137.76**
Abberton Basin Mono with Waste	79.1035	124.00	**152.52**

* Available February 2023

Abberton Basin Taps - Brushed Brass

Description	Code	€ Ex VAT	€ Inc VAT
Abberton Mini Basin Mono with Waste	79.1033	118.00	**145.14**
Abberton Basin Mono with Waste	79.1036	131.00	**161.13**

* Available February 2023













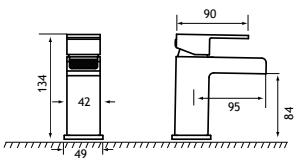

79.1034 - 79.1035 - 79.1036

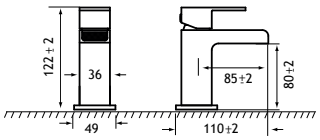

79.1031 - 79.1032 - 79.1033

Required minimum operating pressure key

LP1	- 0.1 bar minimum
MP	- 0.5 bar minimum

Abberton Range

ABBERTON RANGE BATH FILLER





Abberton Range Chrome

Description	Code	€ Ex VAT	€ Inc VAT
Abberton Bath Filler	79.1041	194.00	**238.62**
Abberton Bath Shower Mixer inc bracket, Handset & Hose	79.1037	227.00	**279.21**

* Available February 2023

Abberton Range Black

Description	Code	€ Ex VAT	€ Inc VAT
Abberton Bath Filler	79.1042	205.00	**252.15**
Abberton Bath Shower Mixer inc bracket, Handset & Hose	79.1038	247.00	**303.81**

* Available February 2023

Abberton Range Brushed Brass

Description	Code	€ Ex VAT	€ Inc VAT
Abberton Bath Filler	79.1043	217.00	**266.91**
Abberton Bath Shower Mixer inc bracket, Handset & Hose	79.1039	265.00	**325.95**

* Available February 2023













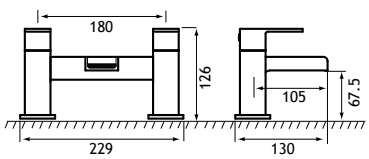

79.1037 - 79.1038 - 79.1039

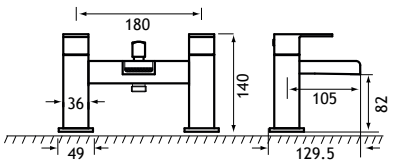

79.1041 - 79.1042 - 79.1043

Pressure (bar)	Flow (litres/min)
0.5	18
1	29
2	43
3	51

Note: Pressure based on an open ended valve outlet without downstream resistance. Applies to bath filler only.

Portobello Range

PORTOBELLO

LP1



79.0004

Portobello			
Description	**Code**	**€ Ex VAT**	**€ Inc VAT**
Portobello BSM inc kit	79.0001	306.00	**376.38**
Portobello Basin Mono inc click waste	79.0002	135.00	**166.05**
Portobello Bidet Mono inc pop up waste	79.0003	142.00	**174.66**
Portobello Basin Taps	79.0004	117.00	**143.91**
Portobello Bath Filler	79.0005	205.00	**252.15**
Portobello Bath Taps	79.0006	159.00	**195.57**

Ceramic disc technology.

Required minimum operating pressure key

LP1 - 0.1 bar minimum

LP1



79.0001

LP1



79.0002

LP1



79.0003

LP1 WRAS



79.0005

LP1



79.0006

Haymarket Range

HAYMARKET



Haymarket			
Description	**Code**	**€ Ex VAT**	**€ Inc VAT**
Haymarket Standard Basin Taps	79.0007	93.00	**114.39**
Haymarket Luxury Basin Taps	79.0008	108.00	**132.84**
Haymarket Bath Taps	79.0009	112.00	**137.76**
Haymarket Basin Mono inc click waste	79.0010	118.00	**145.14**
Haymarket Bidet Mono inc pop up waste	79.0011	128.00	**157.44**
Haymarket Luxury BSM inc Kit	79.0012	315.00	**387.45**
Haymarket Standard BSM inc kit	79.0013	220.00	**270.60**
Haymarket Bath Filler	79.0014	212.00	**260.76**

Required minimum operating pressure key

LP1 - 0.1 bar minimum















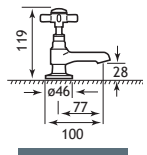

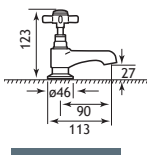

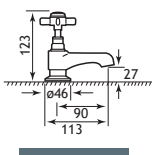

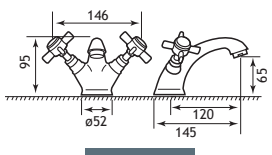

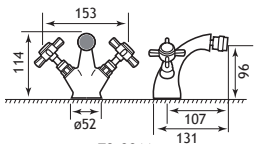

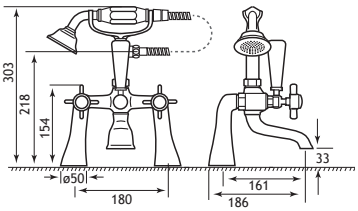

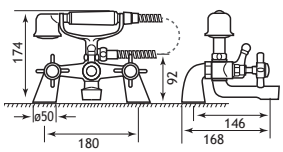

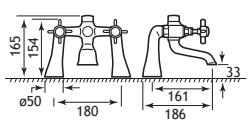

Stenhouse Range

STENHOUSE



Stenhouse			
Description	**Code**	**€ Ex VAT**	**€ Inc VAT**
Stenhouse Basin Taps	79.0024	77.00	**94.71**
Stenhouse Standard BSM inc kit	79.0025	178.00	**218.94**
Stenhouse Basin Mono inc click waste	79.0026	114.00	**140.22**
Stenhouse Bath Taps	79.0027	87.00	**107.01**
Stenhouse Bath Filler	79.0028	133.00	**163.59**
Stenhouse Luxury BSM inc kit	79.0029	212.00	**260.76**

Ceramic disc technology. 1/4 turn.











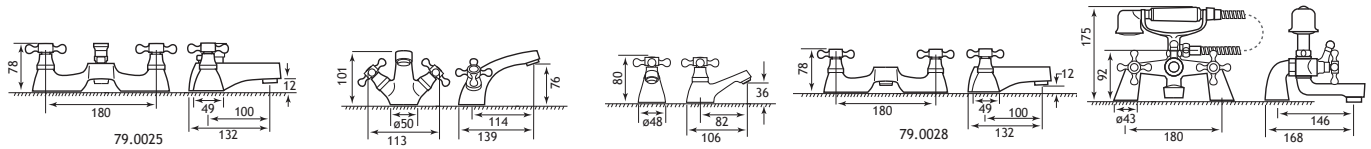

79.0025 | 79.0026 | 79.0027 | 79.0028 | 79.0029

Kenton Range & Kitchen Taps

KENTON

Kenton			
Description (Chrome)	**Code**	**€ Ex VAT**	**€ Inc VAT**
Kenton Basin Taps†	41.2003	55.00	**67.65**
Kenton Bath Taps†	41.2004	58.00	**71.34**

Ceramic disc technology. †While stocks last.

FEATURES
- WRAS Certificate
- Made from brass - sterilisation and anti-rust



41.2003



41.2004

MP



41.2003

MP



41.2004

KITCHEN TAPS

Kitchen Taps & Wastes			
Description	**Code**	**€ Ex VAT**	**€ Inc VAT**
Mono Sink Mixer	93.0023	59.00	**72.57**
Mono Sink Mixer with pull out rinser	93.0024	112.00	**137.76**

†While stocks last.

MP - 0.5 bar minimum



93.0023



93.0024

Wastes, Levers & Accessories

BATH WASTES



Bath Wastes			
Description	**Code**	**€ Ex VAT**	**€ Inc VAT**
Luxury bath pop up waste & overflow	25.0003	58.00	**71.34**
Luxury Bath Pop-up Waste + Overflow	41.2008	75.00	**92.25**
Bath Pop Up Waste & Overflow	56.2071	52.00	**63.96**
Superior Bath Pop Up Waste & Overflow	56.2072	56.00	**68.88**
Bath Combined Waste & Overflow	41.2009	34.00	**41.82**
Push button bath waste and overflow	7.0011	111.00	**136.53**
Ceramic Top Bath Waste	45.0001	80.00	**98.40**
Flipper Bath Waste	25.0007	54.00	**66.42**
Square Sprung Plug Bath Waste	98.0006	59.00	**72.57**
Extended Bath Pop-up Waste & Overflow	98.0008	54.00	**66.42**



BOTTLE TRAPS

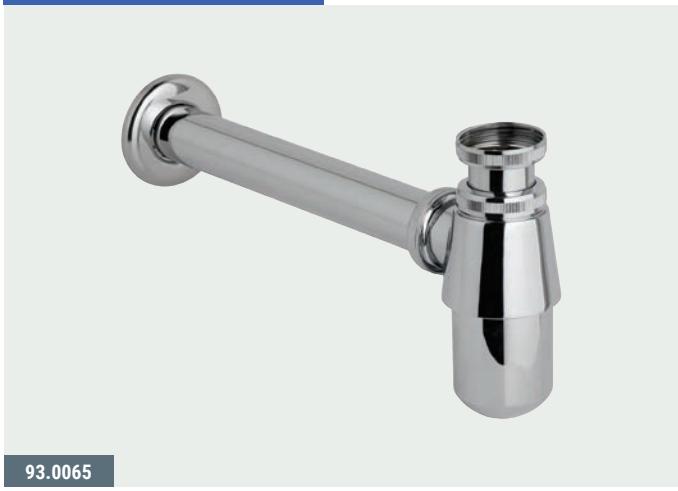

Bottle Traps			
Description	**Code**	**€ Ex VAT**	**€ Inc VAT**
1.25" Bottle Trap inc Extender Tube	98.0017	58.00	**71.34**
Square Bottle Trap and Extension Tube	93.0050	98.00	**120.54**
Minimalist Bottle Trap	93.0065	55.00	**67.65**





LEVERS



Levers			
Description	**Code**	**€ Ex VAT**	**€ Inc VAT**
Metal Universal WC Lever	98.0011	20.00	**24.60**
Ceramic Handle WC Lever	98.0012	24.00	**29.52**



Wastes, Levers & Accessories

BASIN WASTES

Basin Wastes

Description	Code	€ Ex VAT	€ Inc VAT
Push button basin waste	25.0002	31.00	**38.13**
Basin Waste, Ball Chain, Solid Plug	98.0007	26.00	**31.98**
Sprung Plug Basin Waste Unslotted	98.0002	30.00	**36.90**
Push button basin waste	56.2073	42.00	**51.66**
Flip top basin waste - slotted	25.0006	27.00	**33.21**
Flip top basin waste - unslotted	25.0005	27.00	**33.21**
Basin Waste Link Chain Brass Plug	98.0003	27.00	**33.21**
Push button basin waste	41.2010	59.00	**72.57**
Ceramic Top Basin Waste	45.0000	37.00	**45.51**


25.0002


98.0002


98.0007


56.2073


25.0006


25.0005


98.0003


45.0000


41.2010


45.0000

Basin Waste pictured with Helston Basin Mono (White)

FRAMES

Frames

Description	Code	€ Ex VAT	€ Inc VAT
Wall Hung pan/bidet brackets -	21.149B	266.00	**327.18**
Mirage frame 310 x 345	73.0003	219.00	**269.37**
L-Shape wall hung pan/bidet brackets	90.0010	107.00	**131.61**


21.149b


73.0003


90.0010

Roll Top & Freestanding Bath Accessories

Roll Top & Freestanding Bath Accessories			
Description	**Code**	**€ Ex VAT**	**€ Inc VAT**
Shallow Seal Trap	98.0010	121.00	**148.83**
Adjustable Stand pipes for concealing water supply	98.0013	136.00	**167.28**
Stand pipes for concealing water supply pipes	98.0020	154.00	**189.42**
Roll Top Bath Waste Pack	98.0004	355.00	**436.65**
Exposed Bath Pop Up Waste	98.0005	182.00	**223.86**
Exposed bath pop up waste	25.0001	213.00	**261.99**



98.0004



98.0005



98.0010



98.0020



98.0013

MISCELLANEOUS



For 41.5000 : Metal & Chrome plated dome



12.040 : ABS & Chrome plated dome



98.0001

Roll Top & Freestanding Bath Accessories			
Description	**Code**	**€ Ex VAT**	**€ Inc VAT**
Volente Luxury Metal Chrome Shower Waste	41.5000	44.00	**54.12**
Pressure reducing valve 15mm x 15mm†	41.3000	104.00	**127.92**
90mm Shower Waste	12.040	37.00	**45.51**
Fischer Bolts Set - basin to Wall	9.201	26.00	**31.98**
Fischer bolts set - pan to floor - top fixing	9.202	20.00	**24.60**
Fischer cloakroom/corner basin brackets	9.203	27.00	**33.21**
Fischer bolts set - pan to floor - side fixing	9.204	34.00	**41.82**
Top access easy clean shower waste	25.0004	26.00	**31.98**
Deck Shower Kit*	98.0001	107.00	**131.61**

†While stocks last.



41.3000

41.3000 Pressure reducing valve is suitable for water temperature up to 80°C and inlet pressures up to 16 bar. The outlet pressure can be adjusted between 1 bar and 6 bar. Typically these valves are used on the incoming water supply.

Eastbrook Distribution Ltd Terms & Conditions

1. DEFINITIONS

In these terms and conditions, the following words shall have the following meanings:
'Buyer'
Shall mean any person, Eastbrook or company, to whom Eastbrook supplies Goods or Services or with whom Eastbrook enters into negotiations for the supply of Goods or Services.
'Eastbrook' shall mean Eastbrook Distribution Limited (EDL) Unit 3D North Point House North Point Business Park New Mallow Road Cork
'Goods'
shall mean products, articles or things which are supplied by or which are the subject of negotiations for supply by Eastbrook to the Buyer.
'Services'
shall mean services are supplied by or which are the subject of negotiations/ or supply by Eastbrook to the Buyer.

2. MAKING THE CONTRACT

2.1
Eastbrook's salesmen are not authorised representatives and are not authorised to accept confirm or vary any order nor to make any representation or promise on Eastbrook's behalf
2.2
Any estimate/quotation which comprises an invitation to treat is open for a period of 30 days only from the date thereof, provided that Eastbrook has not previously withdrawn it. Any order issued by the Buyer is subject to acceptance by Eastbrook and a contract will only be formed when Eastbrook has accepted the Buyer's offer to buy in writing. Any offer made by the Buyer must be confirmed in writing by the Buyer.
2.3
All orders are placed under these terms and conditions alone.
2.4
These terms and conditions exclude any other terms and conditions inconsistent therewith which a Buyer might seek to impose even though such other terms and conditions may be submitted in a later document and/or purport to exclude or supersede any terms or conditions with them or may be contained in any offer acceptance or counter-offer made by the Buyer.
2.5
No variation of these terms and conditions is permitted unless expressly accepted by a Partner of Eastbrook in writing.

3. CANCELLATION

3.1
No cancellation by the Buyer is permitted except where expressly agreed by a Partner of Eastbrook in writing.
3.2
The Buyer will in the event of agreed cancellation by the Buyer indemnify Eastbrook fully against all expenses incurred up to the time of such cancellation together with by way of liquidated damages a sum of 33 1/3% of the contract price which shall be paid by the Buyer to Eastbrook Forthwith.

4. PRICE

4.1
All prices quoted are those ruling at the date of dispatch or supply.
4.2
Unless otherwise stated all prices quoted are nett, exclusive of VAT, and in the case of Goods ex works.
4.3
Eastbrook reserves the right at any time prior to delivery of the Goods or supply of Services to adjust the price to take account of any increase in the cost of raw materials, labour or services or any currency fluctuations affecting the cost of imported materials or services.

5. TERMS OF PAYMENT

5.1
All sums become due and payable under these terms and conditions not later than 30 days from end of month of date of invoice.
5.2
Time for payment shall be of the essence.
5.3
The Buyer shall have no right to set off, statutory or otherwise.
5.4
If the Buyer (being a Company) has a petition for its winding-up or passes a resolution for voluntary winding-up otherwise than for the purpose of a bona fide amalgamation or reconstruction or compounds with its creditors or has a receiver appointed or all or any part of its assets or (being an individual) becomes bankrupt or insolvent or enters into any arrangement with its creditors or commits a material or serious breach of this Agreement (and in the case of such a breach being remediable fails to remedy it within 7 days of receiving notice to do so)' he will be deemed to have repudiated the Contract.
5.5
Eastbrook reserves the right at any time at its discretion to demand security for payment before continuing with or delivering any Order, supplying any Goods or Services.

6. DELIVERY

6.1
Delivery will be deemed to have been affected when the Goods are ready for collection at the premises of Eastbrook or as the case may be the premises of the suppliers to Eastbrook in circumstances where the Goods are delivered direct from such suppliers.
6.2
Time of delivery is not of the essence.
6.3
Eastbrook shall not be liable for any loss whatsoever or howsoever arising caused by its non-delivery or by the failure to make Goods ready for collection on the due date.
6.4
Eastbrook reserves the right to make delivery by instalments and to tender a separate invoice in respect of each instalment.
6.5
When delivery is to be by instalments or Eastbrook exercises its right to deliver by instalments under clause 6.4 hereof or if there be delay in the delivery of any one or more instalments for whatever reason this will not entitle the Buyer to treat the contract as repudiated and/or to damages.
6.6
Deviations in quantity between the Goods delivered and Goods ordered representing not more than 10 per cent by value shall not give the Buyer any right to reject the Goods or to claim damages and the Buyer shall be obliged to accept and pay at the contract rate for the quantity of the Goods delivered.

7. SUPPLY OF SERVICES

7.1
Time for the supply of Services is not of the essence.
7.2
Eastbrook shall not be liable for any loss whatsoever or howsoever arising caused by its failure to supply Services or any part thereof on the due date.
7.3
Eastbrook reserves the right to supply Services by instalments and to tender a separate invoice in respect of each instalment.
7.4
When the supply of Services is to be by instalments or Eastbrook exercises its right to supply Services by instalments under clause 7.3 hereof or if there be a delay in the supply of any one or more instalments of Services for whatever reason this will not entitle the Buyer to treat the contract as repudiated or to damages.
7.5
Deviation in the quantity between Services supplied and the Services ordered representing not more than 10 per cent by value shall not give the Buyer any right to reject the Services or to claim damages and the Buyer shall be obliged to accept and pay at the contract rate for the quantity of the Services supplied.

8. RISK AND THE PASSING OF PROPERTY IN GOODS

8.1
Risk in the Goods shall pass to the Buyer when the Goods are delivered.
8.2
Notwithstanding risk in the Goods passing in accordance with clause 8.1 hereof title in the Goods shall not pass to the Buyer until whichever shall be the first to occur of the following: -
8.2.1
payment being received by Eastbrook for the Goods and Services and no other amounts then being outstanding from the Buyer to Eastbrook in respect of other Goods or Services supplied by Eastbrook
8.2.2
the Buyer selling the Goods in accordance with the provisions of these terms and conditions in which case title to the Goods shall be deemed to have passed to the Buyer immediately prior to delivery of the Goods to the Buyer's customers; and

8.2.3
Eastbrook waiving its rights under this clause 8.2 in respect of specified Goods or Services whereupon title to the said Goods shall forthwith vest in the Buyer.
8.3
The Buyer is licensed by Eastbrook to use or to agree to sell the Goods delivered to the Buyer subject to the express condition that the entire proceeds of any sale are held in trust for Eastbrook and are not mixed with other moneys or paid into an overdrawn bank account and shall at all times be identifiable as Eastbrook's moneys.
8.4 Until title to the Goods passes:
8.4.1 The Buyer will hold the Goods as fiduciary agent and bailee for Eastbrook;
8.4.2
the Goods shall, subject to clause 8.3, be kept separate and distinct from all other property of the Buyer and of third parties and in good and substantial repair and condition and be stored in such a way as to be clearly identifiable as belonging to Eastbrook;
8.4.3
Eastbrook may at any time revoke the power of sale and use contained in clause 8.3 by notice to the Buyer if the Buyer is in default for longer than 14 days in the payment of any sum whatsoever due to Eastbrook (whether in respect of the Goods or any other Goods or Services supplied at any time by it to the Buyer) or if Eastbrook has bona fide doubts as to the solvency of the Buyer;
8.4.4
The Buyer's power of sale and use contained in clause 8.3 shall automatically cease if the Buyer has a petition presented for its winding-up or passes a resolution for voluntary winding-up otherwise than for the purpose of a bona fide amalgamation or reconstruction or compounds with its creditors or has a receiver appointed of all or any part of its assets or becomes bankrupts or insolvent or enters into any arrangements with creditors or takes or suffers any similar action in consequence of debts or carries out or undergoes any analogues act or proceeding under foreign law;
8.4.5
upon determination of the Buyer's power of sale and use pursuant to clause 8.4.3 or clause 8.4.4. the Buyer shall place any of the Goods in its possession or under its control and unsold at the disposal of Eastbrook and Eastbrook shall be entitled to enter upon any premises of the Buyer for the purpose of removing such Goods.
8.5
Eastbrook shall at any time be entitled to appropriate any payments made by the Buyer in respect of any Goods or Services in settlement of such invoices or accounts in respect of such Goods or Services as Eastbrook may in its absolute discretion think fit notwithstanding any purported appropriation to the contrary by the Buyer.

9. LIEN AND STOPPAGE

9.1
Until such time as the title in the Goods has passed to the Buyer Eastbrook has the right to withhold delivery if the Buyer (being a Company) has a petition presented for its winding-up or passes a resolution for voluntary winding-up otherwise than for the purpose of a bona fide amalgamation or reconstruction or compounds with its creditors or has a receiver appointed of all or any part of its assets or (being an individual) becomes bankrupt or insolvent or enters into any arrangements with creditors or takes or suffers any similar action in consequence of debts or carries out or undergoes any analogous act or proceedings under foreign law.
9.2
When the title in the Goods has passed to the Buyer and the time for payment has falled due but payment has not been made or if the Buyer (being a Company) has a petition presented for its winding-up or passes a resolution for voluntary winding-up otherwise than for the purposes of a bona fide amalgamation or reconstruction or compounds with its creditors or has a receiver appointed of all or any part of its assets or (being an individual) becomes bankrupt or insolvent or enters into any arrangements with creditors or takes or suffers any similar action in consequence of debts or carries out or undergoes any analogous act or proceedings under foreign law Eastbrook has
9.2.1 a lien on the Goods so long as Eastbrook is in possession of them
9.2.2 a right of stoppage in transit
9.2.3 a right of resale
9.3
For the avoidance of doubt it is hereby declared that nothing in this clause shall affect the rights given to Eastbrook by ss.38-48 of the Sale of Goods Act 1979.

10. INSPECTION/SHORTAGES

10.1
The Buyer is under a duty to inspect the Goods forthwith on delivery and satisfy himself as to the due performance of Services forthwith after supply.
10.2
Eastbrook shall be under no liability for any defects or shortages that would be apparent on careful inspection if the terms of this clause are not complied with, and, in any event will be under no liability if a written complaint is not delivered to Eastbrook within 7 days of delivery or supply detailing the alleged detect or shortage.
10.3
In all cases where defects or shortages in respect of Goods are complained of Eastbrook shall be under no liability in respect thereof unless an opportunity to inspect the Goods is given to Eastbrook before any use is made thereof or any alteration or modification is made thereto by the Buyer.
10.4
Subject to clauses 10.2 and 10.3 Eastbrook shall make good any defect or shortage in the Goods and where appropriate replace any Goods damaged in transit as soon as it is reasonably able to do so, but otherwise shall be under no liability whatsoever or howsoever arising from such defect, shortage or damage.
10.5
Subject to clause 10.4 Eastbrook shall remedy any defect in the supply of Services as soon as it is reasonably able to do so but otherwise shall be under no liability whatsoever or howsoever arising from such defect

11. WARRANTY

11.1
No representation or warranty is given as to the suitability or fitness of the Goods or Services for any particular purpose and the Buyer shall satisfy himself in this respect and shall be totally responsible therefore
11.2
If the Goods are in such a state or the Services so defectively supplied as would but for this condition entitle the Buyer to repudiate the contract and/ or claim damages from Eastbrook Eastbrook reserves the right to repair or replace the Goods or perform the Services (or the relevant part thereof) again.

12. LIABILITY

12.1 Introduction
12.1.1
Nothing in this clause 12 shall be deemed to exclude or restrict Eastbrook's liability for death or personal injury resulting from Eastbrook's negligence.
12.1.2
Each of the sub-clauses in this clause 12 is to be treated as separate and independent.
12.1.3
Eastbrook is willing to undertake liability additional to that provided by this clause 12 in exchange for a higher price.
12.2 Exclusion
12.2.1
Eastbrook agrees that if any defect caused by faulty design, manufacture, materials or workmanship is discovered during the period of 3 months commencing with the date of delivery or supply, Eastbrook will remedy any defect at its own expense or, in the case of Goods if it chooses to do so, replace them. Defects caused by abnormal use, misuse, neglect or wilful or accidental damage are not covered by this clause.
12.2.2 The Buyer cannot claim the benefit of clause 12.2.1 above unless:
-
he informs Eastbrook of the relevant defect in writing within 7 working days of discovering it; and
-
in the case of Goods, he returns the Goods to Eastbrook at his own expense.
12.2.3
The risk of accidental loss whilst any Goods are being returned to Eastbrook will be borne by the Buyer.

12.2.4
Notwithstanding clause 12.2.1 above, if the manufacturer of any Goods has provided any guarantee of such Goods for a period longer than three months (a "Manufacturer's Extended Guarantee"), Eastbrook shall use its reasonable endeavours to transfer to the Buyer the benefit of any such Manufacturer's Extended Guarantee in respect of the Goods, provided that Eastbrook may in its absolute discretion elect to do so only at the cost of the Buyer.
12.2.5
Any Manufacturer's Extended Guarantee is for the Buyer only who must complete a return and registration form within 30 days of purchase. Manufacturer's Extended Guarantees are not transferable to third parties and do not cover previously installed products such as ex showroom displays. Failure to complete and return a registration form to Eastbrook within the 30 day period will result in the guarantee on such Goods being limited to that stated in clause 12.2.1 above.
12.2.6
Manufacturer's Extended Guarantees cover Goods which are used for normal domestic use only and are not applicable to Goods which are used for commercial use (i.e. hotels, residential homes, leisure facilities etc.).
12.2.7
In the event that a manufacturer of Goods providing a Manufacturer's Extended Guarantee pursuant to clause 12.2.3 above ceases trading and/ or no longer honours such guarantee, Eastbrook shall have no liability whatsoever to the Buyer with respect to such Manufacturer's Extended Guarantee.
12.2.8
If the benefit of a Manufacturer's Extended Guarantee is transferred to the Buyer, subject always to clause 12.2.1 above and further subject to the defect not being as a result of fair wear and tear, Eastbrook shall only be liable to provide replacement parts. For the avoidance of doubt, Eastbrook excludes any consequential costs involved in the fitting of such parts. Furthermore, with respect to the following these additional terms are applicable:

Perishable components such as non-glass or metallic parts (e.g. plastic parts, seals, wheels etc.) are excluded from a Manufacturer's Extended Guarantee.

Shower and bath screens: Glass and seals for such products are excluded from a Manufacturer's Extended Guarantee.

Towel rails and radiators: Such products must be individually earthed when installed for a Manufacturer's Extended Guarantee to apply.
12.2.9
If, in the sole opinion of Eastbrook, the Goods which are the subject of the Manufacturer's Extended Guarantee have been modified, misused or neglected or have been wilfully or accidentally damaged, Eastbrook shall not be liable under the Manufacturer's Extended Guarantee for the failure of the Goods.
12.2.10
No claim under a Manufacturer's Extended Guarantee will be accepted if Goods have been installed with a fault that would have been clearly visible before installation. A Manufacturer's Extended Guarantee does not cover any Goods which have been modified, altered, transformed or relocated in any way.
12.2.11
Claims under a Manufacturer's Extended Guarantee must be made by the Buyer within [7 working days] of the defect being discovered.
12.2.12
In consideration for receiving the benefit of this clause, the Buyer agrees that, apart from those terms set out in clause 10 and 11, all other terms, whether conditions, warranties or innominate terms, express or implied, statutory or otherwise, are excluded from the contract between Eastbrook and the Buyer to the extent permitted by law (except where the Buyer deals as consumer within section 12 of the Unfair Contract Terms Act 1977 when the terms implied by sections 13, 14 and 15 of the Sale of Goods Act 1979 shall be implied into the contract).
12.3 Exclusion of Consequential Loss

Eastbrook shall not be liable for any consequential or indirect loss suffered by the Buyer whether such loss arises from breach of a duty in contract or tort or in any other way (including loss arising from Eastbrook's negligence) including, without limitation to the generality of the foregoing:
- loss of profits;
- loss of contracts;
- damage to property of the Buyer or anyone else; or
-
personal injury to the Buyer or anyone else (except so far as such injury is attributable to Eastbrook's negligence).
12.4Limitation
Eastbrook's total liability for any one claim or for the total of all claims arising from any one act or default of Eastbrook (whether arising from Eastbrook's negligence or otherwise) shall not exceed the contract price of the Goods.

13. FORCE MAJEURE

13.1
Eastbrook shall not be liable for any failure to deliver the Goods or perform the Services arising from circumstances outside Eastbrook's control.
13.2
Non-exhaustive illustrations of such circumstances would be act of God, war, riot, explosion, abnormal weather conditions, fire, flood, strikes, lockouts, Government action or regulations (UK or otherwise), delay by suppliers, accidents and shortage of materials, labour or manufacturing facilities.
13.3
Should Eastbrook be prevented from delivering the Goods or performing the Services in the above circumstances, it shall give the Buyer written notice of this fact as soon as reasonably practicable after discovering it.
13.4
If the circumstances preventing delivery of the Goods or performing the Services are still continuing three months after the Buyer receives Eastbrook's notice, then either party may give written notice to the other cancelling the contract.
13.5
If the contract is cancelled in this way, Eastbrook will refund any payment which the Buyer has already made on account of the price (subject to deduction of any amount Eastbrook is entitled to claim from the Buyer) but Eastbrook will not be liable to compensate the Buyer for any further loss or damage caused by the failure to deliver the Goods or perform the Services.

14. SALES PROMOTION DOCUMENTATION

Whilst Eastbrook takes every precaution in the preparation of its catalogue, technical circulars, price lists and its other literature, these documents are for the Buyer's general guidance only and the particulars contained therein shall not constitute representations by Eastbrook and Eastbrook shall not be bound thereby.

15. USE OF DATA

15.1
If the Buyer provides any data relating to the business of the Buyer to Eastbrook for any purpose, then the Buyer agrees that Eastbrook may hold such data and use it in relation to the supply of Goods, to process payment and to inform the Buyer (including all its staff) of other Goods or Services that Eastbrook may offer from time to time. Eastbrook will hold all data relating to the Buyer in accordance with our privacy policy and privacy statements in force from time to time and which is available on demand.

15.2
The Buyer agrees that Eastbrook may share any data referred to in clause 15.1 with third parties only where it is necessary for the provision of the Goods or Services supplied by Eastbrook and further that the Buyer shall hold Eastbrook harmless for the misuse of such data by those third parties.
15.3
In relation to any data supplied by the Buyer to Eastbrook regarding the Buyer's customers, the Buyer warrants and represents that they have obtained consent to share such data with Eastbrook (whether this relates to remedial services or the replacement of Goods or otherwise) and the Buyer agrees to indemnify and keep indemnified, Eastbrook from and against any losses, damages, liability, costs (including legal fees) and expenses incurred by Eastbrook as a result of or in connection with the Buyers breach of this Clause.

16. NOTICES

Any notice to be given hereunder shall be in writing and shall be deemed to have been duly given if sent or delivered to the party concerned at its address specified overleaf or such other address as that party may from time to time notify in writing and shall be deemed to have been served, if sent by post, 48 hours after posting.

17. ASSIGNMENT

Neither Eastbrook nor the Buyer shall assign or purport to assign or transfer the contract or the benefits thereof to any other person without prior written consent of the other.

18. SEVERANCE

18.1
If any provision of this contract (or part of any provision) is or becomes illegal, invalid or unenforceable, the legality, validity and enforceability of any other provision of the Contract shall not be affected.
18.2
If any provision of the contract (or part of any provision) is or becomes illegal, invalid or unenforceable but would be legal, valid and enforceable if some part of it was deleted or modified, the provision or part-provision in question shall apply with such deletions or modifications as may be necessary to make the provision legal, valid and enforceable. In the event of such deletion or modification, the parties shall negotiate in good faith in order to agree the terms of a mutually acceptable alternative provision.

19. PROPER LAW AND JURISDICTION

The Contract shall be governed by and construed in accordance with Republic of Ireland law and all disputes arising in connection with the contract shall be submitted to the jurisdiction of the Republic of Ireland Courts.

20. HEADINGS

The headings of these conditions are for convenience only and shall have no effect on the interpretation thereof.

Eastbrook
Affordable Luxury

ISSUE 47









Republic Of Ireland Edition | January 1st - July 31st 2023

Eastbrook Distribution Ltd.
Pinnacle House, The Ward, Dublin 11, D11 K27C

Tel: 01 513 7070
Fax: 01 513 7080

For Enquiries & Orders: **ireland@eastbrookco.com**
For Technical Enquiries: **technical@eastbrookco.com**

Eastbrook Co.
Eastbrook Road, Gloucester GL4 3DB

Tel: 01452 317800
Fax: 01452 330494

For Sales / Enquiries: **sales@eastbrookco.com**
For Orders Only: **orders@eastbrookco.com**
For Technical Enquiries: **technical@eastbrookco.com**

New Product Selections Inside